Cherokee Hints and Tips 2000

A Piper Cherokee Source-book

Published by

Cherokee Pilots' Association
P.O. Box 1996
Lutz, Florida 33549

Edited by Terry Lee Rogers

Introduction to
Cherokee Hints & Tips 2000

The Cherokee Hints & Tips 2000 manual incorporates information which originally appeared in the Piper Owner Magazine and other publications. It contains the best of the articles pertaining to operation and maintenance of Piper Cherokee aircraft.

I want to thank all those Cherokee Pilots' Association members who contributed time and effort to provide the tips and suggestions included in this volume. Without the efforts of these members, the entire association would not be possible.

This material is published as a helping hand for Cherokee owners. Neither the Cherokee Pilots' Association nor any of its agents or advisors can be held responsible for the accuracy or airworthiness of any information available herein. Consult with your mechanic or local GADO office for professional advice. Only you and your properly-licensed technician should make the final decision on the applicability of the information to your plane.

Included in this manual is an index. Use it to find the articles which apply to the problem you are having. You can also use the index to return to articles which you wish to reread at a later date.

Nor everything in every article applies to every plane, however, the manual contains a wealth of owner experience which will prove invaluable for Cherokee owners. It should not be necessary to reinvent the wheel each time an owner has a problem with his aircraft.

I hope you enjoy this book. Browse through the material frequently. Or open it to any page and just begin reading. And if you have a tip or suggestion, send it to the Cherokee Pilots' Association for publication so it can benefit other association members.

Your comments about this publication are welcome.

Terry Lee Rogers
Cherokee Pilots' Association
P. O. Box 1996
Lutz, FL 33549

Table of Contents

Hints & Tips Feature Articles

In addition to the feature articles, numerous short articles filled with hints & tips appear throughout this publication. Use the index in the back of the book to find particular articles of interest.

Doing your Own Preventive Maintenance

By Terry Lee Rogers

In the good old days, under the Civil Aeronautics Ad ministration, pilot applicants had to study aircraft main tenance before they could take their exam for a pilot's license.

Today, all most pilots know about maintenance is that it is an expensive item to delegate to an approved mechanic.

The FAR's permit pilots to perform quite a bit of preventive maintenance and more and more pilots are doing so, and for good reasons.

First, maintenance is becoming more costly. Doing some of it yourself can save quite a bit of money.

Second, a pilot under the FAR's is responsible for the maintenance of his plane--not his mechanic. If something goes wrong the FAA comes looking for the pilot, not the mechanic.

Finally, preventive maintenance is the best way for a pilot to get to know his plane and its systems. He learns how the systems operate and is made aware of their condition.

A pilot is likely to feel more secure when he knows the wings are not going to fall off after he has had a personal look inside and knows the condition of his plane.

FAR 43.3 specifically permits a pilot to perfonn preventive maintenance on any aircraft owned or operated by him. Preventive maintenance is defined as simple repairs or replacement of parts "not involving complex assembly operations."

Further definition is provided in the appendix to FAR43 which permits pilots to do the following: change or repair tires; service shock struts; service wheel bearings; replace safety wire or cotter keys; lubricate parts; replenish hydraulic fluid; refinish aircraft decorative surfaces (except balanced control surfaces); repair upholstery; make simple repairs of fairings and cowlings; replace side windows; replace safety belts; replace seat parts; troubleshoot and repair landing light circuits; replace bulbs, lenses and reflectors of position and landing lights; replace any cowling not requiring disconnection of flight controls or the propeller; replace, clean or gap spark plugs; replace any hose, except hydraulic connections; replace prefabricated fuel lines; clean fuel and oil strainers, and replace or check batteries.

Whew! Quite a list!

A pilot can do more than half of the required preventive maintenance of his plane without amechanic at all.

Further, the FAR's permit a pilot to do just about anything if he works under a mechanic's supervision (This is the basis for the currently popular "owner-assisted annual.")

A pilot can even overhaul his own engine, if he desires, but he and an A&P mechanic must sign off to put the plane back into service, and the work performed must be detailed in the appropriate logbook with the date and the name of the person who performed the service.

Most mechanics are a little touchy about signing off someone's else's work (wouldn't you be?), but even so, a pilot should consider at least performing the preventive maintenance the FAR's allow him. And as much of the more complex repair as amechanic will approve.

Some Guidance

First of all, your home airport may or may not be open to pilot-performed maintenance. At some airports this is encouraged while at others it is as popular as hornets at a nudist colony.

If your airport does permit you to perform maintenance make some arrangement with the FBO about small parts. Screws, nuts, bolts, cotter pins and safety wire may seem like small things and they are - individually. But when you begin to take things apart and put them back together, it adds up fast. Your FBO deserves to be compensated for the price of the item and for the nuisance of searching for it for you.

Anyone performing work on an aircraft must utilize the techniques approved by the FAA. To learn these techniques you will need a copy of the FAA's Advisory Circular 43.13 (a two-volume set) entitled "Acceptable Methods. Techniques and Practices -Aircraft Inspection and Repair."

This comprehensive set, costing about $10 (1984) from the FAA, ESSCO or any good aviation book store, has chapters on materials, aircraft structures, control cables, hardware, corrosion, metals, landing gear, windshields, electrical systems, engines, propellers, radios, instruments and weights & balance.

If you need to know the proper way to safety wire, 'this manual is the one you need. Need to do some riveting?

Check with this manual first.

And once you know the general techniques for working on aircraft, you will need to know about your own plane.

The most complete source of information about Cherokees is the Cherokee Service Manual which is available from Piper in Microfisch form, or, if you do not have a Microfisch reader, you can get the manual from ESSCO, 426 W. Turkey Foot Lake Road, Akron, OH 44319. (216) 644-7724. Price, several years ago for a PA-28 two-volume service manual was $55. The PA-32 volume listed at $50.

ESSCO also listed a manual for the 150-160 hp Cherokee models for just $25 - quite a buy.

The service manual is something every Cherokee owner should have. It provides complete specifications, diagrams of service procedures and special testing techniques which apply to Cherokee planes.

It isn't exactly light reading, but reading which will help you get to know your Cherokee.

Want to know the proper type of lubricant for axle bearings or for the control yoke? It is all given in the service manual (including brand names where it is important.)

Parts

Now that you have some material to guide you, you will run into the problem of purchasing parts.

You can always go to Piper and get your part - at a premium price. Or you can shop around. Of course, you must know the part you need and you may be interested in purchasing a Parts Catalog for your plane.

ESSCO's price on parts manuals was $48 for the PA-28 and $40 for the PA-32 series (1984). These manuals consist of schematic drawings of the entire aircraft with each part shown and with the correct parts number given.

If you plan on shopping around at discount houses for parts you cannot expect your local dealer to look up the parts numbers for you. Go ahead - buy the manual. In addition to providing part numbers, it has one additional advantage: it shows you how things are assembled together and in what order.

Wherever you get your parts, the FAA requires that they be "approved." This includes everything from engine parts right on down to small light bulbs in interior or position lights.

To determine whether you are getting approved parts, you need to check for one of the following:

1. An Airworthiness Approval Tag (FAA Form 8130-3) which shows that a part has been approved by an authorized FAA inspector.

2. A TSO (Technical Service Order) number which, under FAA rules, will be printed on the part with the manufacturer's name, serial number or date of manufacture, the model designation and the part's weight.

3. A PMA marking which indicates the manufacturer has Parts Manufacturing Authority from the FAA. In addition to the FAA-PMA marking, the part (or its tag) will show each product on which it may be installed.

4. A ticket or other document which demonstrates that the manufacturer was approved under either an Approved Production Inspection System or an FAA Production Certificate.

Used or overhauled parts should also have tags attached. The colors of the tags are important.

A yellow tag means a part has been overhauled. The tag will show when the overhaul was performed, who performed it, and the name of the inspector.

A green tag means an "airworthy" part, perhaps one salvaged from another plane, but which has not been overhauled.

A red tag means the part has been rejected and is not airworthy. Do not use it.

Keep the tag as part of your aircraft maintenance records.

Record Keeping

You should become aware of the records which should be kept of all maintenance, and those which must be kept.

All maintenance should be recorded. When your oil is changed you should know when so it will be changed again at the proper time and it will not be needlessly repeated too soon.

Also, a complete record system will make your plane more valuable when it comes time to sell.

A pilot must make records in the appropriate logbook of any preventive maintenance done to comply with an AD (Airworthiness Directive) and any work which could possibly alter the flight characteristics of an aircraft.

It is no longer required to keep aircraft maintenance records in a bound logbook, but it is a good idea. The value of a plane will depend on the quality of the record keeping.

It is further required that records of annual (or 100-hour) inspections be kept for one year or until the work is repeated.

Major alterations are logged on a Major Alteration Form, FAA 337. The form is filled out by an A&P mechanic and a copy is sent to the FAA in Oklahoma City.

Form 337's must be kept for one year.

Other records must be kept with the aircraft permanently. They include a record of the total time in service of the airframe, current status of life-limited parts, time since overhaul of parts which must be periodically overhauled, current status of AD's and their method of compliance, and a list of major alterations which have been accomplished.

Like the old adage says, the job is not over until the paperwork is done. And complete record keeping is vital to good aircraft maintenance.

Tools You Will Need

If you are going to work on your aircraft you are going to need some tools. More than just a pliers and screw-

driver will be required, although a $2,000 set of special tools is unnecessary.

Please don't try to get by borrowing tools from a mechanic. This is a no no. Mechanics make their living with their tools and they have spent many thousands of dollars on them. The cardinal rule of mechanics is not to loan tools--especially to laymen.

And try to get quality tools. It is better to have a few good tools than a whole tool box full of junk which breaks or rusts and which can damage the equipment being worked on.

Perhaps the most useful tools you will own are screwdnvers You will need a selection of different sizes, both in blade thickness and width.

The use of a screwdriver which is too big or too small can cause damage, either to the screws or to the structure itself. A rule of thumb: a screwdriver should fill at least 75 percent of the screw slot, both in thickness and in width.

You will need some Phillips screwdrivers, too. Not all cross-slotted screwdrivers, however, are really Phillips, Phillips screws have a rounded slot while a true pointed head is known as a Reed & Prince screw.

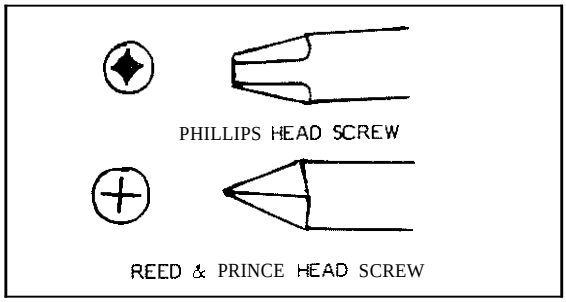

These types of screwdrivers are not interchangeable. Keep both kinds of screwdrivers on hand and be careful to examine any cross-slotted screws carefully before choosing a screwdriver.

Also, you can save some money as well as a little space in the tool box by buying a handle with several tips. Craftsman offers such a screwdriver and it is of good quality, available at your local Sears store.

Wrenches, too, are necessary. You will need a good quality set of combination wenches (open end at one end and box end at the other.) Open end should he used where it is easier to slip it on and off the bolt, hut the closed end box should be used where the bolt or nut is stubborn.

If you attempt to use an open end wench where strength is required, the jaws will tend to open and you may round off the bolt or ruin the wrench, or both.

A good socket set is also needed. The ratcheting handle will be invaluable in speeding up your work. Also, you can get extensions and handles to permit you to do things and go places a simple wrench cannot.

Sockets come in both six and twelve point models, The six point models have more strength and grip to work with rusty or stuck nuts and bolts.

Where a bolt is stuck, do not use the ratcheting mechanism to loosen it--the mechanism may be damaged. Instead, use a non-ratcheting handle or a box end wrench.

When trying to free a nut or bolt, pull rather than push. That way, if the bolt releases suddenly you will not fall into the work, but away from it.

One additional wench is also needed--a torque wrench. They come in two styles--the dial-and-bean type and the ratcheting type.

The dial-and-beam has a scale on which you read the torque. They are inexpensive. A 318-inch dnve model can be purchased for less than $20.

The ratcheting type costs more--about $60, but it is easier to work with. You set the handle of the torque you want and begin tightening the bolt or nut slowly. When the proper torque is reached, the handle will click and move freely.

You must, however, move the handle slowly. Otherwise, the torque reading will not be correct.

With the dial-and-beam model you must also move the handle and read the torque on a scale as you turn the nut or bolt. To get the proper torque you must keep the handle moving. You cannot stop and start over again.

The proper torque for bolts is shown in the aircraft service manual.

Obviously, you must treat a torque wrench with care, as it is a precision instrument. It cannot be used as an ordinary wench to loosen or tighten bolts, It must not be dropped or handled roughly. And it should be checked periodically for accuracy.

You will need several pliers. In addition to the standard model you probably already own, you will need either a duckbill pliers for handling safety wire, or a special safety wire tool readily available from mail order houses for about $8. You will also need a set of diagonal cutting pliers (dykes).

Vise-grip pliers of several sizes can prove invaluable when you need to clamp onto something. Also, some other tools which are particularly applicable to aircraft should be in your tool kit.

A good tire gauge will save you considerable money by increasing the life of your tires.

You will need several tools to permit you to do spark plug maintenance: a 718 inch deep socket which will fit aircraft plugs, wire feeler gauges, a plug tray and a thread clean-out tool.

Unfortunately, many "deep" sockets are not deep enough for aircraft plugs, which are longer than automotive. When you go looking, be sure to take an old plug along so you can try out the one you are considering.

A brake riveting tool, available for about $15 (1984), is essential as it will save you considerably when you reline your own brakes.

An aircraft hydrometer is needed to check your battery It is made like an automotive model, but it is designed to operate on much less electrolyte.

And finally, although not necessary, a portable air tank can be mighty handy when inflating tires or nose gear. It can be used to blow dust and grit off of working surfaces.

A 100 psi model is available in most auto parts stores at low cost and can really be useful.

The money you spend on accumulating tools is well spent. It can save you a bundle on aircraft maintenance and the tools can make other chores, such as auto repairs, a lot easier.

Hopefully, you are now interested in doing your own preventive maintenance and motivated to acquire the publications and tools required. In other articles in this manual we will explore some of the problems in doing certain types of service on Cherokees.

Checking your Idle Mixture

Do not accept an over-rich carburetor or fuel injector at idle or off-idle engine speeds. How can the average pilot determine whether the idle mixture setting is correct? Idle mixture may be checked by doing an engine run up which includes these steps:

1. With the mixture control set at full rich, run the engine at 1,000 to 1,200 rpm until temperatures have come up and stabilized. All temperature gauges should indicate in the green arc areas.

2. Set power of engine at 2,000 rpm for 30 seconds. This will clear any lead deposits which may affect operation at idle.

3. Reduce power to idle (550 to 600 rpm). Slowly lean mixture and check for an rpm rise. If there is no rpm rise, the idle mixture is too lean. If the rise is more than 50 rpm, the idle mixture is too rich.

4. If step three produced a moderate rise (10 to 50 rpm) no further action is necessary. If step three indicated either a lean or rich idle rpm the idle mixture and engine speed should both be adjusted by a competent A&P mechanic.

TBO—A Subject of Concern

Questions are frequently asked by operators about the recommended time between overhaul (TBO). Answers to some of these questions have been supplied by Avco Lycoming. Their report follows:

The established hours of service are based on average experience in operation, coutinuous service and economic factors at time of engine overhaul. The term "continuous service" is intended to mean that the engine will have been in operation a minimum of 15 hours each month, and that the forecasted hours of service will have been attained within a proportionate period of time.

These hours can normally be expected provided recommended operation, periodic inspections and engine maintenance have been exercised in accordance with respective engine operator's, manuals. Although the time between overhaul periods shown in the service instruction represents Avco Lycoming's recommendations, operators may continue beyond the hours stated unless otherwise limited by FAA regulations.

It is the responsibility of the agency maintaining the aircraft to decide if the engine shall be operated beyond the recommended number of hours; this decision should be based on knowledge of the engine and the conditions under which it has been operated. Engine accessories, including propellers and turbochargers, may require overhaul prior to engine overhaul; this decision, too, is the responsibility of the operating agency or the accessory manufacturer.

Reliability and service life cannot be predicted when an engine has undergone any modification not approved by Avco Lycoming. The hours of service life are recommendations for engines as manufactured without considering any modifications that may improve the life of the engine. The recommended overhaul periods in no way affect, change or alter Avco Lycoming standard warranty policy or prorated engine replacement policy.

"Notes" are used to amplify certain information provided in the service instruction. Those which are particularly significant will be discussed briefly.

There are several items which restrict Avco Lycoming engines to a TBO which is less than that for other very similar engines. Some older engines have been built with 7/16 inch diameter instead of 1/2 inch diameter exhaust valves which limit those engines to a 1,200 hour TBO. Use of an Avco Lycoming engine in an aircraft flown for agricultural spraying or other chemical applications reduces TBO to 1,200 hours. An engine altered in the field to incorporate an inverted oil system will automatically have the same recommended TBO as that listed for a factory designated AIO or AEIO engine of the same series.

The reliability and service life of engines can be detrimentally affected if they are repeatedly operated at alternating high and low power applications which cause extreme changes in cylinder temperatures. Flight maneuvers which cause engine over-speed also contribute to abnormal wear characteristics that tend to shorten engine life. These factors must be considered to establish TBO of aerobatic engines; therefore it is the responsibility of the operator to determine the percentage of time the engine is used for aerobatics and establish his own TBO. The maximum recommended is the time specified in Service Instruction 1009AA.

TBO is a recommended number of engine operating hours based upon an average experience in operation and continuous service. The specific TBO for your engine will be based on the recommendations of Service Instruction 1009AA, your knowledge of how your engine has been used, and its condition at any point within its operating life.

Carburetor Ice Detector For Early Warning

The NTSB has issued reports advising that there are too many accidents caused by carburetor ice. But what is carburetor ice, and how do we eliminate it?

Carburetor ice forms when moisture in the air freezes because of the decrease in air temperature in the carburetor venturi. It may form at temperatures weli above freezing and in clear air. It is especially prevalent where humidity is high.

When carburetor ice develops the engine may run rough or the rpm may drop off, but the only way to be sure is to apply carburetor heat. But how much should you apply? And for how long?

You know that when you put heated air in the carburetor the volumetric efficiency of the mixture will decrease and the engine will develop even less power. Too little carburetor heat, however, will not cause the ice to melt.

With an ice detector the problem of carburetor ice is eliminated. This device, manufactured by ARP Industries, Inc., 36 Bay Drive, East Huntington, LI, NY 11743 (516) 427-1585), provides positive indication of carburetor icing with an optical probe in the carburetor itself.

The unit warns immediately and reliably by red light or both red light and horn when frost first begins to form in the carburetor, long before enough ice has a chance to build up and choke off the venturi.

The instant the red light comes on there is no doubt ice is beginning to form. You will have approximately five minutes to apply heat before rprn drops off. When you apply just enough heat to cause the red light to go out, the frost (or ice) has been melted off the probe, which incidentally is in the coldest part of the venturi of the carburetor. There is no doubt you have cleared the carburetor of ice, With the light off you can then return the carburetor heat to off.

Spark Plug Fouling

In many cases spark plug fouling from the tetraethyl lead (TEL) in aviation fuels can be reduced or eliminated by proper operating techniques.

The problem of lead fouling arises when low engine operating temperatures coupled with a rich mixture prevent the complete vaporization of the TEL. Under these conditions, lead deposits can form in the combustion chamber and may adhere to the spark plug electrodes, causing misfiring. By establishing proper engine operating temperatures, the TEL can be kept properly vaporized and pass out the exhaust system.

For those experiencing lead fouling, the following operating recommendations are made:

I. By use of spark plug recommendation charts, be certain proper plugs are installed. Do not simply replace the same part number as those removed because a previous owner or mechanic may have installed the wrong ones.

2. Do not accept an over-rich carburetor or fuel injector at idle or off idle engine speeds. Have a mechanic adjust the mixture.

3. After a flooded start, slowly run the engine to high power to burn off harmful lead deposits - then return to normal power.

4. When parked avoid closed-throttle idle. Set engine at 1,200 rpm. The fuel contains a scavenging agent, but it only functions at spark plug nose core temperatures of 800 degrees F. or higher. To get this temperature you must have a minimum of 1,200 rpm. Also, the engine will run cooler and smoother and the alternator will have more output at 1,200 rpm. (Taxiing is exempt - use whatever rpm is required.)

5. Use normal recommended leaning techniques at cruise regardless of altitude, and re-lean the mixture with application of alternate air or carburetor heat. If aircraft is a trainer, schedule cross-country operation whenever possible.

6. Avoid fast, low power let down. Plan ahead. Descend with power.

7. Avoid closed throttle lauding approaches whenever possible. Use slight throttle. Carburetors and fuel injectors are set slightly rich at closed throttle.

8. Keep engine operating temperature in the normal range. Too many people think the lower the temperatures the better. Keep cylinder-head temperatures in the normal range by use of normal power and proper leaning and use oil cooler baffles to keep oil temperature up in winter.

9. Swap top and bottom plugs every 25 to 50 hours. Top plugs scavenge better than bottom plugs.

10. After flight or ground operations and before shut down, go to 1,800 rpm for 15 - 20 seconds, reduce to 1,200 rpm, then shut engine off immediately with mixture control.

Quick Cure for a Stuck Mike -

by Harvy Randall

The hand mike in my plane had been acting up, but after the radio shop cleared it as o-k 1 gave it no further thought.

Then it stuck in the transmit mode and I was IFR from ALB to BOS. Turning the # 2 radio off, I depressed the BOTH switch on the audio panel and pressed # 2 radio.

I could listen on # 1 and then transmit by pressing # 1 radio, and then switch to # 2 to listen. The effect was to use the Audio Panel as a push-to-talk switch.

It was easier than hying to find which mike or push-to-talk was bad, and I think if you have a transmit capability it is better to keep it than to risk losing it by trying an "air fix."

As it turned out, the problem was a short in the center jack and not the mike at all.

Worried about TBO
Disadvantages of Constant-Speed Prop

Richard E. Borski expressed concern about operating his Cherokee D with a 0-360 engine in excess of TBO. With 1,820 hours on the engine TBO time was rapidly approaching, although his compression showed in the low to

mid 70s and oil consumption was only one quart per six to eight hours.

Although this engine has a number of hours on it this does not mean it is about to fall out of the plane. TBO is merely the recommended time between overhauls determined by the engine manufacturer. It is based on an average use of the plane.

Actually, your engine may be in much better shape than some low-time engines which have not been used regularly. The worst problems develop in engines which are used only occasionally, but which sometimes sit for weeks or months at a time between uses.

Avco Lycoming bases its recommendations upon the assumption that the aircraft will be used at least 15 hours each month. The 2,000 hour TBO of your engine is not amandatory time for overhaul, but arecommendation. You may exceed this time by 10 percent if you keep an eye on oil consumption, continue getting good oil analyses, adhere to proper maintenance schedules, use the correct grade of fuel, and avoid prolonged low-power descents or high-power climbs.

Use of cruise power in the range of 60 to 65 percent can also drastically prolong engine life. A recent article in the Aviation Consumer said one operator claims to get 3,500 hours between overhauls by limiting cruise to 50 percent. I do not recommend carrying things this far, but it sure gets the point across.

Regarding conversion to a constant-speed propeller, I would not recommend this unless the added versatility and performance would mean enough to justify the cost, increased maintenance and possible decrease in value of the plane.

The decrease in value would come about because most people considering a Cherokee are looking for a simple plane and would not be trained in the operation of a constant-speed propeller.

Gas Tube Problem

By Olden Moore

Recently, after fueling and taking off from Williamsburg, VA, at around 400 feet the smell of gas was so strong it was necessary to open the small vent window and all air vents. The odor dissipated rapidly.

However, on entering downwind to runway 2 of Patrick Henry Airport, the smell again was strong of gasoline.

We immediately proceeded to the general aviation service area and, upon removal of the rear seats, found wetness from raw gas. It was decided that apin hole was in the right **tank.**

However, upon removing the **tank** from the wing we found the gas overflow tube was connected to a 3-112 inch small rubber chaffing tube. This tube had split and in' a left hand turn the gas would run outboard and in a right band turn the gas would run back down the root of the wing into the back seat.

The happy ending is we did not need a new tank - just a 50 cent piece of hose and approximately $100 worth of labor to remove and replace the *tank.*

(Ed. note: Piper recommends replacement of these hoses each 1,000 hours - good advice considering the number of reports we receive concerning leaking hoses.)

Redlining of Some 180 Models With Sensenich Propellers

Some Cherokee models are redlined at specificrpms while others are not. Here is how to tell whether your plane is one which is or is not.

According to FAA TC Data Sheets (#2A13), all PA-28 models with Lycoming 0-360-A3A engines and Sensenich Propeller Models M 76EMM-0, M 76EMMS-0, 76EM8S5-0 or 76EM8-0 are affected.

The pilot in these planes should avoid continuous operation between 2,150 and 2,350 rpm. Also, placards must be installed in accordance with Piper Service Letter No. 526 and Flight Manual Supplement No. 1, dated April 22, 1969.

The restriction applies not only to Cherokee 180s, but to some 160s also.

Incidentally, Piper suggests that members concerned about this contact their local FAA General Aviation District Office (GADO) and examine a copy of the TC data sheets. They present a wealth of information about these airplanes.

The 2A13 Data Sheets are 43 pages long and are revised from time to time. If you use them for information be sure you have the latest revision.

Inexpensive Upholstery Fix

By Harvey Randall

When N467FL needed some upholstery work, the quotes for new seat covers were out of sight. However, we were able to refurbish all four seats, backrests and all for less than thirty five bucks.

For the backs, we took four high neck T-shirts, the double knit kind (men's medium size), turned them inside out, sewed up the arm holes and neck, cut off the extra material from the arms, turned them right side out, and BINGO! Four backs which slip snugly over the seats. We used safety pins to join the bottoms to prevent "riding up."

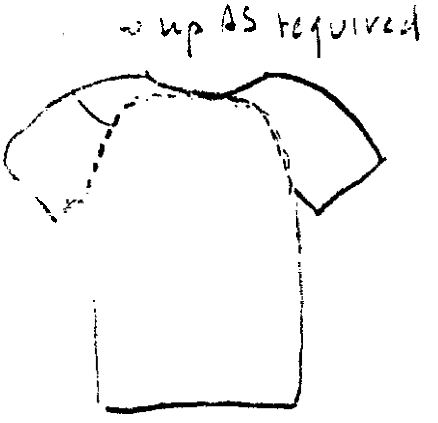

For the seats we purchased foam-backed nylon stretch (bucket) seat toppers at $2.98 each from the J. C. Wbitney automotive catalog. They fit tightly over the front seats: the hack seats took a little work to At in neatly. The toppers came in a variety of colors, as follows: blue, green, brown, red and black.

If you try this, I suggest you order the seat toppers first, if you want to coordinate colors.

So long as the seats are still in some reasonable shape the covers will hide a multitude of sins, including rips in the seams, stains, etc., and will be "form fined by the end of three or four hours of flying.

Cures for a Leaky Cherokee

By William E. Howard

I would like to pass along all my findings on leaky Cherokees. First of all, the supplies needed are as follows:

A. AGE Auto Seal, white, black or clear.
B. GE Glass Seal.
C. Vaseline
D. Rubber Wing Root Seal, new, Piper
E. Masking or vinyl tape.
F. Contact cement.

Attacking the windshield is most proper, of course, but it is not the answer to wet floors. The metal strip must be removed and the Plexiglass should then be removed completely. Then, remove all rubber channels, etc., and replace them with copious amounts of product "A" (above) which will, of course, cure in place forming not only a cushion for the glass, but also a perfect seal. **Any** excess that squeezes should be wiped off and cleaned completely with gasoline.

The same treatment may be given to the side windows, which, while you are at it, can also be replaced with heavier panes. The door windows may actually be drilled with a series of holes through which the bucked end of the rivets will fit.

This trick permits the new glass to fit flush with the aluminum skin.

If you desire not to remove any windows, then product "B" is better as it is less viscous and will seep in better.

The vent window may **leak** and also create wind noise. If it cannot be tightened, I suggest forming a gasket from product "A" with help from product "C".

I am speaking only of the metal framed window. Coat the metal with the Vaseline and then use the silicone rubber or the old rubber gasket. Then close the window, remove the excess rubber, and do not touch for two or three days.

The window will now seal perfectly. The same trick may be used on the entire door with the Vaseline being applied to the fuselage and the silicone to the old rubber gasket. Forming in place is very helpful if the door does not fit perfectly to start with.

Now to the real problem—wet floors and carpets. This is not due to windows and probably not even due to wing root seals (although they should be a good fit.)

The problem is water w i t h the wing. This is verified by members who have had gasoline ***run*** down the wing and into the cabin. Fluids in the wing collect and run down the spars, front main and rear. The problem is especially bad at the main spar.

I believe the main source is the gas tank area, and here is a plan of attack. First, remove the old wing root seals. This permits some access to all three spars. Taking a small brush, seal the spars to the sides of the fuselage skin with either product A or B. Keep in mind that water is running down the bottom flange of the main spar. This step may also be done from inside by removing upholstery panels, but is better done from outside.

Next, replace the wing root seal using contact cement and masking tape to form a tight grip all the way around.

If the rubber wing root seal wants to grip the fuselage and wing skins tightly by itself, then just a little glass seal under both sides of the seal all the way around (top and bottom) will do the trick without the need to use the messy contact cement.

Next is the big chore, hut it is most certainly important: sealing the gas **tank.** Remove the tank and inspect the rubber vent hose. Next, glue leatherene circular patches over the holes in the inboard rib. Here, water can drip vertically and get on the inboard side of this rib and then, due to the angles of dihedral and incidence, work its way to the main spar bottom flange.

Next, use silicone rubber to seal off all gaps between the inboard rib and the main spar where water, once past the tank, can find an opening.

It is possible that all of this tank work can be avoided by using glass seal around the edges of the tank. I went the full route because I wanted to replace the rusty tank screws with stainless.

The final step is a very minor one and that is to seal off the stall warning sender. Use Vaseline against the wing skin with silicone formed in place against the removable stall warn switch. Again, install and tighten the four screws and wipe the excess to make a neat job.

I realize that all this is a rather lengthy process, but it will work. Depending on what angle the ship sits, I suppose the water could also enter the tail cone. If tail cone water is the problem it will he harder to stop, but it can be controlled or dammed by sealing the bulkheads to the bottom skin by using glass seal and by using Auto Seal at larger openings where stringers go through tbe bulkheads.

Solved Problem of Slow-Turning Starter

By John A. Shindledecker

A few years ago I traded my Tri-Pacer on a 1962 Cherokee 160 which always gave me starting problems. I had mechanics look at the starter two times, overhauling it both times with no added satisfaction.

Then I took the plane to a different shop to get a top overhaul and told the mechanic about my difficulty. He

called later to say the starter was in bad shape and of the wrong type. I authorized him to get a rebuilt one.

He suggested I get one that had the "gear driven" drive instead of the straight drive I had been using. That ended my trouble right there. I flew it two more years with not one failure.

Another solution might be to have a starter shop rewind it to change the voltage from 12 to 10 volts.

Comments on Alternator, Slow Starter

By Peter Rejto

Perhaps I should start out saying that 1 own a 74 Wamor and I have lived with it for the past 2-1/2 years (600 hours.) Shortly after purchasing this plane I started having serious alternator problems and, in fact, went through three alternators in the first year! In all these alternators (airborne "Chrysler") a diode would blow.

Finally, Apollo Aviation in Santa Barbara was able to isolate the problem and I must give them full credit since I had the plane at many other shops to no avail.

The only symptom that I would notice prior to the failure would be that strange ammeter "dance." Replacing the voltage regulator, battery, and alternator never made much difference. Finally it was discovered that the over-voltage relay was defective, and since that day the charging system has worked perfectly.

It seems that the sudden breaking of the field voltage, especially when the alternator has a heavy load, can cause the diodes to blow.

Also, just to be kind to the alternator, it was suggested that during start up I use the split master switch with the alternator field side off. This gives slightly more voltage to use for cranking, and spares the field circuit and relay from the voltage fluctuations during the start.

One other thought: never shut down the master switch when there is a heavy draw on the alternator unless there is an emergency as this is just an invitation to a ruined alternator.

Regarding starting problems of the engine just not turning over, I also replaced the battery and starter with no serious improvement. Finally, in desperation, I went through the entire starting circuit with some steel wool and line sand paper, starting at the battery box and working forward. The results were amazing. The ground strap on the engine and the relay that it connects to on the *firewall* made the most difference.

Unfortunately, the results did not last very long before I had to repeat the orocess. When the temnerature turns a little colder I definitely plan to change to the new Shell multi-weight oil, since I am sure that this will also improve the start as well as give other benefits. One other related thought: I am having good luck using non-resistor plugs; the engine fires faster and I have had no problem at all with radio interference.

Arrow Power Settings

By William M. Foley

The Arrow handbook shows power settings for several different rpms and consequently one has little guidance from the book as to which setting is best from a fuel consumption point of view.

Although the Avco operator's manual for that engine is specific about the best rpm, if you examine the fuel consumption charts (copy enclosed) for the Arrow engine, you will find that for each rated power setting rpm does have a noticeable effect on fuel consumption. Reducing the rprn at a fixed power setting reduces fuel consumption. Consequently, one should run at the lowest rpm/manifold pressure combination tabulated in the Cherokee *Arrow* owner's manual, Section IV, which will provide the desired power setting.

At 7,000 feet, this would be 2,250 rpm for 55 percent power. At 10,000 feet, it would also be 2,250 rprn and at 15,000 feet it would he 2,450 rpm. The minimum rpm which can be used is established by the red line on the propeller/engine combination installed in your airplane. On my 1968 model 180 hp airplane, this is 2,250 rpm. Hence, I never use settings below that setting.

With respect to setting power levels, the Arrow is a somewhat surprising aircraft. By using the fuel consumption in the engine manual and the airspeed data from the airplane manual, I have worked out miles per gallon for several altitude power settings and wind conditions. In contrast to many aircraft, my calculations indicate that the Arrow achieves best fuel economy at 65 percent power setting for all altitudes under zero wind conditions. This assumes that a best power condition is used. For example, at 6,000 feet, it achieves 15.11 miles per gallon for a 55 percent power setting 15.2 miles per gallon for 65 percent power, and 14.59 miles per gallon at a 75 percent power setting.

The situation changes slightly if one uses the best economy mixture setting. With the mixture leaned to that condition, 55 percent power settings give slightly better fuel economy than 65 percent power settings.

The influence of wind is also interesting. With a 20 mph tail wind, power settings of 55 percent or less lead to best performance when best power consumption is used. With head winds of 20 mph, a 65 percent power setting still leads to best fuel consumption.

You may find it instructive to work out these details from the handbook for yourself since it is very helpful in the understanding of how to obtain best performance.

Close Call With Nose Gear

By George Hann

I could share some experience with the nose wheel axle that might be of some interest and may even save some lives. There is a Murphy's Law problem with the front axle

that allowed me to unscrew the nuts to the axle by hand.

The front axle holds a tube in place that acts as a bearing support shaft. The axle bolt is about one-half inch in diameter. It is held in place with two castle plastic nuts. If these nuts are tightened evenly, then the plastic castle nut keeps them from vibrating loose.

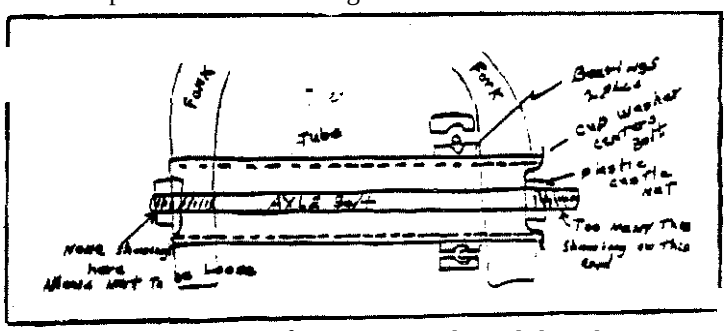

However, if one nut is tight and the other is just started, then the plastic in the castle nut does not come into play. Thus, the front axle is held in place with a nut which is just hand tight.

Now, if this does not make any pilot pucker, he is braver than I am.

Corrosion Problem in Dirt-Floored Hangars

By A. T. Stretch, Airtex Products

In a previous issue it was stated that a hangar afforded the greatest protection from moisture. This is true in a heated hangar, or one with a cement floor. However, hangars with dirt floors can be worse than tying downoutdoors!

Dirt-floored hangars, unless well ventilated, can accumulate moisture absorbed from the earth when the sun warms up the hangar. Barometric changes pump the warm, moist air into the fuselage, wings and other enclosures. When the pressure drops, the air comes out, but leaves the moisture inside. When the temperature drops, the moisture condenses on the cool metal and acts as a catalyst for salt and other contaminates and corrosion follows.

In my work of making patterns for Airtex Aircraft upholstery, I have gone into many dirt-floored hangars to work on customers' aircraft and have noticed in many cases that the entire aircraft was wet from condensation, due to temperature drop during the night.

The only preventative to this moisture accumulation is adequate ventilation! If you encounter such a condition, there are two ways to ventilate the plane; one is to fly the plane at least once a week or to heave the hangar doors open. In the latter case, the hangar can at least provide protection from sun and wind. If vandalism or thieves are a problem, cut windows through the walls of the hangar and cover them with heavy wire screen. If you hangar near the ocean, a closed hangar should be black-topped to keep the moisture down.

Cherokee doors and windows have a tendency toward leaking, so if you tie down outdoors, you should use a canopy cover, made of cotton water and mildew treated fabric such as is offered by Airtex Products, Inc. Do not use vinyl coated covers because the plasticizers in the vinyl can be injurious to Plexiglass, causing cloudiness and crazing.

Over the past thirty years, I have owned arag-wing Luscombe, a Cessna 170-B and an Ercoupe, all of which were tied down outside. Protected by a windshield cover and engine cover and an **annual** Simonize job on the upper surfaces, these three planes showed no abnormal rust or corrosion.

However, if you tie down near the ocean, you should give your plane a fairly frequent thorough bath with a hose to dissolve any accumulation of salt, just as boat owners do, to protect their boats. Salt is deliquescent, absorbing moisture from the atmosphere. Moisture has to be present before the salt can do its dirty work.

Suggestions on Seat Belts, Autopilot Repair

By Roy Irwin

After searching high and low at Oshkosh this year, I finally ordered new metal-to-metal seat belts from Airtex. They offer one of the only belts long enough for Cherokee front seats - long enough to belt in the control wheel.

I have adapted a "quickie" Hooker Harness (portable) into a semipermanent and pretty acceptable arrangement by running extension belts over the top of the back seat and down to the rear seat belt anchors.

You cannot use the shoulder belts with passengers in the rear seats, but otherwise it appears to work well and it does not have the spine compression problem of other Cherokee arrangements which attach below the shoulder level.

I would appreciate hearing from any member who has found a good way to permanently attach a dual strap shoulder to the roof of an older model Cherokee. As my family grows I will need a more permanent arrangement.

Bill Koch, of Braden Flying Service, in Easton Pennsylvania, did an excellent job of fixing my old original 1962 Piper Auto Flite auto pilot. Not many people are familiar with these units anymore.

Winterizing Doors and Windows

By Richard Rickon

One of the more frustrating challenges I have experienced with my Cherokee is water leakage through the doors and windows. Over the years I have tried several over-the-counter weather sealers but always come back to clear silicon rubber. But there is a trick to it. Leaky windows are usually a result of the window separating from the original sealant and thus becoming loose in its frame. Silicon rubber is difficult, at best, to run in an even, good-looking bead, so here is how I do it.

First take a 314 inch wide roll of masking tape and run it along the aluminum skin next to the Plexiglas, leaving about a 1116 inch of skin showing. Next, run another strip of tape on the glass about 114 inch from the skin. This leaves about 5/16 inch between the tapes. Do this all around the windows, top, bottom and sides.

Now, apply a liberal amount of silicone rubber about two-feet long. With one hand push in on the window at the edge to open up any gaps and with a finger on your other hand force the silicone rubber into the gap. When you release the pressure on the window the gap will extrude the excess silicone and you can make a neat bead between the two piecesoftape. Continue this process around the window and remove the tape before the silicone sets up.

The window should be clean and dry with all loose sealant removed before you start.

This method has been 95 percent successful, although not a permanent solution. I have been getting about two to three years protection with minor resealing.

As for the doors, my success rate is not that good. I have found when I replace the rubber 1/4 inch round seal that if I install it as far to the outside edge of the door as is practical, my success rate is higher.

If your rubber seal is in good shape but still leaks. I have found that by lining the door opening where necessary with Macklanberg-Duncan (M-D) Self-Adhesive Foam Tape I can eliminate most of my water problems. Be sure to use the closed-cell type foam which is light gray in color. This is moderately compressible and you may find you can not close the door You may have to adjust the door latches a bit, but remember, this foam will set after a couple of days and you may have to readjust the doors again.

Oil Analysis Helps Prolong Engine Life

Your engine is a machine trying to tear itselfapart.

Thousands of times each minute many parts, some of them iron or steel, are subjected to acceleration and deceleration with dizzying changes of direction. Surfaces rub and strike each other, while hot gasses cook the pistons and valves.

Oil, and little more, saves this monster from tearing itself apart. Oil, a lubricant, a cooler, a cleaner and a cushion between metal parts. Under ideal conditions every moving part is covered with an oil film. In actual practice, however, there is metal-to-metal contact and there is wear.

Another source of wear is abrasives carried in the oil. Airborne dirt or solid products of combustion are examples.

There are essentially two types of reciprocating oils available, straight mineral and ashless dispersant. Straight mineral oils leave deposits while ashless dispersant oils have an anti-sludge additive which will not leave deposits in combustion chambers. Impurities will be held in suspension and will leave the engine at oil change.

Analysis of used engine oil is becoming a day-to-day preventative maintenance tool. Developed by the railroads, picked up by the military, today it is one of the finest maintenance and troubleshooting tools available for oil-wetted mechanical systems.

Oil analysis. will indicate unusual wear patterns and often detect beginning failures before they cause excessive damage or costly repairs. These incipient failures cause an abnormal high wear content in the oil. Typical failures that can often be detected are crankshaft scoring, cylinder scoring, rod bearings, pistons, rings, valve guides, and external contamination if the form of sand or dirt.

Analysis requires that a sample be taken about 25 to 50 hours after an oil change. This sample provides a base and from then on wear metal levels will be compared to this base. Samples taken on a routine basis are analyzed and any increases in one or more metals noted.

Permanent analysis sheets are furnished for each engine with results and comments concerning status of the engine. In the event a dangerous problem is discovered and it appears dangerous to fly the aircraft, the owner is notified by the lab by telephone immediately.

The secret of low-cost, high time engines is to make minor repairs when indicated by oil analysis before ugly sounds tell you the engine is in need of expensive repair.

Quick Drain Plugs Can Be Hazardous

By Glenn O. Strawn

On January 3, 1981, I had my oil and filter changed by our airport mechanic. After he changed my oil and put the cover back on, I did a test flight around the patch. During my first approach on base leg, I observed only my two green lights on my mains were on--no green light on my nose gear. I did a missed approach and climbed out.

I climbed to 4,500 and nosed her down at two "G"s. Still no gear down light. I had both tanks full of fuel (48 gallons) so I had time to try other things.

The airport was going to send up one of their own aircraft to see what was holding my nose wheel from extending. Three of their planes would not start. I stayed up for more than one hour using left rudder then right rudder, nose up, then nose down. No luck!

As I started another downwind approach to the field using left, right, and banks, the nose gear extended (plus stall red light came on). 1 had three green lights at last. Thank God!

An investigation revealed that the mechanic had installed a quick oil-drain plug and my nose gear would not clear the new drain plug.

We called our local FAA and they informed us there had been several recent reports of this happening to others-. some have not been so lucky.

Cowl Pad Replacement; Fuselage in Basement

By Joe Ryann

In regard to a letter from A.T. Stretch of Airtex to you advising they do not supply a cowl pad for Cherokees, in December, 1980, I ordered and received a cowl pad for a PA-28-140 from Airtex, but it did not fit. However, I made a template, cut one out of some excess Airtex carpet that was available. That turned out to be a nice job.

Some advice follows. Do not remove the old cover

if practical. Have a friend hold a dog-leg Phillips screwdriver on vent opening screws while you get under with a 31 8 inch nut driver. (Sometimes there are two nuts on a screw).

The hick of inserting the new cowl pad far enough to fully cover the cowl is to remove some of the foam rubber backing about 3/4 inch around the perimeter and up to three inches per side of the instrument panel. Do not forget to cut the defrost hole openings and trim nap. Then, using the rounded end of a hacksaw blade under the pad and a friend on the outside to guide, you position it very well. Next, take an awl of ice pick and push up through the screw holes and pad for the vent cover screws, have someone put a screw on the tip of an ice pick and push back through the hole. Be thankful there are only four (4).

I have a 1968 140 that uses up 65% of my spare time. But as a hobby, I have found nothing more enjoyable or expensive.

This may sound extravagant, but it has been a time and money saver for me. I bought a wrecked PA-28-140 fuselage for a reasonable price and put it in the basement. Aside from the obvious nuts, bolts, spare parts, the entire cabin and instrument panel is open and accessible for fitting, measuring and planning. No more trips to the airport just to look at something for a minute. If any member is interested in obtaining a fuselage in this area, I will be glad to help.

Kansas Member Has Storage Tip

By Dan Caliendro

A tip I have found very useful and not seen used by anyone else: I hung wire brackets as used for "in and out" material in offices under the front seats of my Cherokee 180.

When 1 got my Cherokee 6 1 built a couple of shelves out of simple paneling and glued a 1/2 by 1/2-inch border around the sides and back. I hung these with wire and sloped them slightly to the rear.

Each of the above methods worked beautifully as a place to keep my AOPA airport directory, AIM, log books and a road atlas put out by a motel chain (free) which just happens to indicate where I can expect a motel and what rate to expect.

I actually prefer the shelves I built for the Six as I have two shelves under each seat and it is easier to reach down and remove the article from the shelf that it was to lift it over the edge of the basket. The fact that the total construction cost was zero as opposed to the $5 spent on baskets is probably insignificant to most of our readers.

(Everybody knows that pilots are rich!!!)

Wants to Swap Doors

Raymond L. Shreve, of Key West, Florida, asked whether a late model Cherokee door would fit a 1974 model PA-32. The answer:

I have checked the assembly drawings of these planes and find that basically they are very similar and should fit without too much trouble.

Of course, the doors for the PA-28 series will not fit the PA-32. On the PA-28 series, there is a slight difference in the upper latch mechanism on the PA-28-140's, 150's and 160's which would require modification if swapping between these series was contemplated. This, however, should not be a problem with your Six which uses a door different from the PA-28, but common to all PA-32's.

There are numerous doors available, as listed in the parts catalog, but the differences seem to pertain merely to him options. The doors themselves appear identical.

I suggest you check the following to see whether the door you intend to install is, in fact, identical to the one being replaced: hinge locations on the door assembly and latch design. If these are the same the door should fit without any trouble.

Real Problems With Lycoming Engines

By Phillip C. Griffin

I had a serious problem with my 1975 Cherokee Archer which I am wondering if other people have also had.

I bought the aircraft new in January of 1975 with a total time of some forty odd hours on it. Except for an occasional mechanic, nobody flew it subsequently except me.

At 1,245 hours I experienced partial power failure 300 feet above the ground on takeoff at Palo Alto. I managed to herd the machine back around the pattern and land it safely. Inspection revealed that an exhaust valve had broken and left me on three cylinders. The broken piece had gone out the stack and I did not crash. I had the valve replaced and continued on my way.

Twenty hours later, at 1,265 hours total time, airframe and engine, 300 feet above the ground on takeoff at Pineville, Oregon, the same thing occurred again with another exhaust valve. Again the broken piece went out the stack and I was able to return and land on three cylinders.

At this juncture I decided I had played enough Russian Roulette for awhile, decided to replace all the exhaust valves, and finally ended up with a top overhaul. Subsequently, I sold the airplane.

The mechanics who administered the top overhaul could find no evidence of bumed valves, bad leaning practices, or other worn parts which would cause the valves to fail. His conclusion was that the valves themselves were faulty.

Praise for Service Bulletins

By Charles W. Fowler

THANKS for the "Discrepancy bulletins!!!" You saved two butts literally. After greasing through an annual inspection (by an ex-Piper mechanic) I noticed all your reports of nose gear problems in the PA 28's and 32's. I decided to jack mine up and check for myself.

No cracks, but the downlock fork bushings were

shot that a hard landing could easily have broken something. Based on this a friend checked his and found the same. Thanks.

Knows What to do With Old Tennis Balls

By Peter B. Hill

About all this activity on pitot covers--If the lady in Palm Springs plays (or knows someone who plays) tennis, ask for three old tennis balls.

After a small slit with knife or razor blade, one will fit perfectly over the pitot sword. The other two, after the puncture of a small hole, will fit snugly over the fuel tank vent overflow pipes, prevent insect blockage, and subsequent fuel starvation (which has been the sad fate of several Cherokees over the years). To be sure these items are removed during preflight (they are fairly obvious when you drain fuel), it might be desirable to sew a bright streamer on each ball.

Numerous Tips From New York Member

by Francis Coleman

I have been procrastinating in sending the following for you and other member's perusal.

1. The problem I had with Alcor Ekonomix EGT was that it kept lowering its maximum readout. This occurred over several months until on my way home in March from the Bahamas and of course your sunny (but cool) Florida, the needle wouldn't move up at all. The probe looked OK, and upon heating the same it did produce current. The gage had continuity (Check with a 10,000 ohm meter setting, as it is quite sensitive).

A call to customer service at Alcor solved the problem. The gentleman there, after I described all the symptoms, said to move the potentiometer adjusting screw behind the plastic plug in the back of the gage. I moved it back and forth a couple of times to make better contact and, IT WORKED!

This gage had been in service since 1969 and a small amount of corrosion had built up on the contact point, insulating it enough to reduce the readout on the meter.

Prior to calling Alcor, two local A&P's couldn't come up with an answer, so if anyone ever has a problem, I suggest calling Alcor first. It could save a lot of time and money.

2. My accidentally discovered economy--Can't fly with controls locked--control lock. Upon exiting my 1969 Arrow, I pushed the right front seat, with the back tilted ahead, forward so that the back wedges into the control wheel. A little practice as to the proper tilt of seat back and it should be OK for most Cherokees that do not have headrests.

3. Seat covers: 1981 Sears Spring and Summer catalog, page 614, Shows 314 inch pile lamb's wool polyester cotton backing at $79.99 per pair. I ordered type 4 for front seats, and after eight months use so far they seem quite satisfactory.

4. Engine oil leaks at crankcase center and accessory case flanges: clean area at feast 114 inch side of joint. of all paint, etc. Do a thorough job of cleaning using solvent and air, if available. Run bead of silicone rubber adhesive sealant along seam. I use MOPAR #4026070, available from Chrysler products dealers.

5. My wife, Jan, and I have made two trips to the Bahamas, and of the places we've visited or stayed overnight at, we like Pittstown Point Landings on Crooked Island, the best. (Brochure, including rates, enclosed.)

There are twelve rooms, each having one double and one single bed. Tom and Shelly McKay, who do an excellent job running it, would like to have a group of Cherokee pilots get together there. There are many things we like about it and most outstanding are: no telephones or televisions, electricity 24 hours a day and walk from your plane to your room.

We rent vests and a life raft at Red Aircraft, Ft. Pierce, Florida. Fly to Rock Sound and clear customs and refuel. Continue on to Pittstown Point Landings, and return to Rock Sound for customs and fuel, then back to Fort Pierce.

Don't think you can make it??? There is a "middle aged boy" from Lancaster, PA, that flies his Tri-Pacer down and back--he is 78.

The last item for this letter: retractable gear owners - check the rear side of brake hoses for chaffing when the gear goes up or down. To correct the situation, loosen the upper clamp and push the excess hose up into the gear well and tighten the clamp.

Alaska Member Knows Cold Weather Flying

By Al Nowland

1 sent you a picture of my plane, N7061W, sometime back and you asked me to write down some of the winter flying problems we have up here in Alaska. Here goes.

Some days the biggest problem is getting the pilot started and out to his plane.

I have wing covers, cabin cover and engine cover (insulated). I used an 850 watt inside car heater under the engine inside the cowling and one in the cabin. If it is 0 to 20 degrees, I will put beat on for about 2-4 hours and then it will usually start. Zero to -30 degrees I will heat it about 8-24 hours. Below -30 degrees I just do not go flying unless it is an EMERGENCY.

With no skis, 1 have to watch airport NOTAMS to make sure the airport I am going to is plowed. I hope to some day have skis for my bird, but have to talk my better half flying partner into the fact I really need them. HA! HA!

You have to check your engine crankcase breather tube to make sure it is not frozen shut. If it should freeze up you can blow your crank shaft seal.

What is fun is to watch an Alaskan pilot waddle out to his bird with all his winter clothes on and then watch him stuff himself into his airplane to go flying. When you go flying up here in the winter, you do not carry a lot of bag-

gage, as your winter emergency gear takes up most of your baggage area.

Curtains For Your Plane?

By William G. McKelvey

As you know my plane is a 1970 235. 1 saw the curtains in anew Warrior which I really liked. The windows in the new Warrior are the same body style as mine.

The way to handle the curtain situation is: go to the FBO and order the rods and the brackets to fit a new model Warrior. Then someone can make the curtains.

If you do not know anyone who can make the curtains, you can call Penn Aire, Inc., in Martinsburg, Pennsylvania, at the Altoona airport at (814) 793-2164, and ask for Dan Claycomb. He can have the curtains made by a lady who is a friend of his.

I am sure they can be shipped to you C.O.D. Dan can also order the brackets for you since he is a Piper Dealer.

Having been through the factory at Vero Beach twice previously, I highly recommend the trip to any Cherokee owner. He will definitely enjoy it.

Lycoming Problem After Top Overhaul

By Kenneth A. Nelson

I just finished reading a letter from Philip Griffin that you published in your June edition describing how Philip lost two exhaust valves while flying his Archer.

I had a similar experience flying a 1963 Cherokee 180. While the situation seems at first similar, I believe the similarity to be superficial because my plane was much older and, on the average, flown less frequently. However, on the chance that there is something common and relevant, I am writing and describing my experiences with 7263W--a PA-28-180 built in 1963.

Theplanehad three ownersandalmost 1,100 hours on the original engine when a top overhaul was done in 1976. The log said 1/2 inch valves were installed, increasing the TBO to 2,000 hours. The plane was then sold to a man who used it to get his license. He kept it two years and flew it about 50 hours. He then sold it to me.

I flew it about 80 hours when I blew the exhaust valve on number two cylinder. I had to replace the entire cylinder. The next year, about 120 hours later, 1 blew the exhaust valve on number four cylinder. The valve was intact when number two blew. It broke off and went through the piston. The number four valve broke up and went out the exhaust.

I then pulled off the other two cylinders aid found marks where free metal was floating around in the cylinder. I resolved not to fly the plane again without a major overhaul, and as that was not economically sound, I sold the plane.

The two remaining exhaust valves were not burnt, but they were "tuliped, that is, the valve stetn was stretched so as to be narrower where the stem connects to the tulip or flat part. As I understand it, that is not supposed to happen to valves until they get a thousand or so hours on them.

The closest to a consensus that 1 got from inspecting mechanics as to the cause was that whoever did the top overhaul put the valve guides in wrong. This caused the valves to break. In addition, it is possible that old valves were installed.

I don't know if there was something in the way I operated the engine that caused this. Both failures occurred in summer. Both failures occurredeither after or during long, low-powered, 60 percent, leaned cross countries. While opinions vary, most people agree that short of running when there is obvious detonation, it is very hard to hurt the engine by using bad operating procedure.

I concluded that the top overhaul was done in anticipation of sale aid was done with inferior parts and possibly by inferior mechanics. Since I was the third owner since the top and four years had passed, I concluded that I had no recourse against anybody and wrote the whole thing off.

The only real similarity to Philips' case is that the top was done about the same time his plane was manufactured so the same batch of valves or guides may have been used.

The lesson, if there is one, is to suspect work that is done before a sale, especially if a lot of time has passed since the work and plane has not been flown much.

The High Speed Whumps

By Chuck George

I noticed an article iti The Cherokee some titne hack about "High Speed Whumps". My Cherokee developed "Rough Speed Whumps" about five years ago and when it whumped I could also smell raw gasoline fumes.

After checking all fuel lines and finding them o-k, I removed the left wing tank and found that the rear bulkhead had been "oil canning" and also had a "T" shaped crack three inches across the top and 1-112 inches down. I repaired this with a large fiberglass and epoxy patch and a 16 gauge one-inch angle (aluminum), running vertically at the center of the bulkhead and contacting the upper and lower surface of the wing to eliminate the "oil canning". My advice about "whumps" is to trace them down as they could tnean trouble.

I have a 1964 PA-28-140, N6088W, with 2200 hours that I have owned and flown for eight years and 800 hours with no down time. The Alpha 200 Genave was in the plane when I acquired it and no problems.

I believe Genave avionics are o-k. The GA1000 has an incandescent display and the display will last longer if dimmed whenever possible.

Reports On Super Tips

By Clifton M. Buell

I had my PA-28-180 only two months before in-

stalling the Super Tips. Therefore, my experiences are somewhat limited in comparing the way the bird flies now with the way it used to fly before the installation.

I have made the following observations: I saw no increase in cruise speed. In fact, I may have dropped one or two miles per hour. It still stalls at power off or power on, at exactly the same indicated air speed.

I do see much better climb rates from sea level up to near my service ceiling. I do see shorter take off rolls and I think it is a much more stable flying airplane, particularly at approach air speeds.

Aileron response seems to be much crispier and it may be alittle more stable in turbulence. I hope this information will help.

Happy With Owner-Assist Annual

By Lou Cleary

As you may recall, I became a member after calling you about an annual inspection costing an outrageous $1,600.00+ in 1980. You agreed the price seemed high, but that it may have been possible. Since then, the company has closed and left town. (Good Riddance).

1981 was a completely different situation. Delaware Airpark, listed in the AOPA Airport Directory as Dover-Cheswold (302) 674-2666, is located between Dover and Smyma, Delaware. There is a superb mechanic (A&P and IA) who will let you help with the annual inspections cutting the cost almost in half The only stipulation is that advance notice be given as he is kept quite busy, as you can see why.

In contrast to last years annual, this one was under $300.00, including new parts that needed replacement and labor.

Also, our starter gave usaproblem and he allowed us to remove and inspect the same, finding the problem (two loose screws). The prop had to be removed which required him to safety wire the reinstallation. The bill, including a case of oil at $40.00, was just over $400.00. Now I call that reasonable.

Mechanic Has Some Information

By December, 1981, many aircraft owners will be required to change their seat belt buckles to the metal-to-metal latching type. At present I have FAA and TSO approved seat belt buckles, seat belt and webbing assemblies, and shoulder harness assemblies. Enclosed are the installation instructions which are enclosed with the buckles and may be obtained by writing to me.

I have noticed that some Cherokee owners are having starter problems. Even after changing the battery, voltage regulator and starter you must consider the condition of the starter solenoid and battery solenoid. Although these units may be making contact, they may also be adding resistance to the system and causing problems.

Starters may be removed and high torque coils installed to add that little extra to keep them flying. Many mechanics overlook the primer nozzles at inspections and checking the point gap on the magnetos. As an aircraft owner be willing to ask your mechanic about these details.

Aircraft Inspections, Inc.
Lebanon, Or 97355

Lycoming Airworthiness Directive

81-18-04 AVCO LYCOMING: Amendment 39-4199. Applies to all 0-235, 0-290, 0-320, 0-360, IO-360, AIO-360, and IO-540 engines.

Compliance required as indicated unless already accomplished.

To prevent failure of the engine oil pump, accomplish the following...

(b) Compliance is required within the next 25 hours in service after the effective date of this Ad for all Lycoming models 0-360-A1LD S/Ns L-17555-36A thru L-22462-36A, 0-360-A1F6D S/Ns L-16685-36A thru L-22582-36A, 0-360-A5AD S/Ns L-17057-36A thru L-20038-36A, IO-360-A1B6D S/Ns L-9598-51A thru L-16595-51A, L-17273-51A, L-17312-51A thru L-17319-51A, L-17321-51A, L-17336-51A thru L-17340-51A, L-17347-51A thru L-17351-51A, L-17355-51A, L-17358-51A, L-17377-51A thru L-17380-51A, IO-360-CC1E6D, S/Ns L-14527-51A, TO-360-C1A6D, S/Ns L-101-69A thru L-243-69A; any of the above model engines overhauled in the field between April 7, 1970 and October 15, 1976; all the above re-manufactured model engines shipped prior to April 1, 1981.

(1) Replace the existing drive and driven impellers with a steel driving impeller, P/N 60746, and an aluminum shaft assembly, P/N LW-13775 in accordance with Avco Lycoming Service Bulletin No. 455 dated April 10, 1981, or later approved revision.

(c) For all other models in the subject applicability paragraph, comply with paragraph (b),(1) at the next overhaul or whenever the accessory section is removed, but not later than 2,000 hours since new or last overhaul. An entry must be made in the engine logbook that compliance with this AD was accomplished.

This AD is effective September 14, 1981.

Piper Service Bulletin - Fuel Line Chafing

Models affected: PA-28-140, 151, 160, 151, 161, 180, 181, 236, 280R, 200R, 201R, 201RT.

Reports have been received of a chafing condition between the left fuel line, near the fuel selector, and the left forward air vent assembly lever.

If this condition exists and is left uncorrected, the

chafing could become severe enough to wear through the fuel line and cause fuel leakage.

Compliance Time: Within the next 100 hours or at the next annual, whichever comes first.

1. Remove left hand forward air vent cover.
2. Inspect for clearance between fuel line and air vent lever. It will be necessary to rotate vent lever from open to close position to ascertain clearance throughout full travel. If a minimum of .05 inch exists, reinstall air vent cover and proceed to instruction 7.
3. If clearance is less than .05 inch, fabricate atool from a suitable nonmetallic material, such as wood (dimensions of flat piece of material: 6x.75x.12 inches). Insert tool between fuel line and vent lever. Slide tool fonvard and aft, at the same time twisting it in each direction, to obtain .05 to .15 inch gap.
4. Remove tool and, utilizing a suitable mirror, inspect the fuel line for damage such as dents, flat spots, etc.
5. If fuel line is worn beyond airworthy limits, remove and replace fuel line; fuel *tank* drainage may be necessary. Install new fuel line and assure clearance as described in instruction 3
6. Inspect for leaks, reinstall side panel and air vent cover.
7. Make appropriate logbook entry of compliance with this Service Release.

Wants Information About Harness Retrofit

George O'Dell, of Lake Worth, Florida, inquired about a seat belt harness retrofit for his plane. The answer:

Piper Aircraft offers a retrofit kit for PA-28 and PA-32 aircraft. The kit fits numerous models, but you need to check with your dealer to see whether it will fit yours. Ask about Piper Part number 760-365. In addition, shoulder harness retrofit kits for passenger seats are available. They also are available for many model combinations. Ask your dealer to check Service Letter Numbers 355 and 358.

Trouble Shooting PA-28 Brake System

This article was submitted by an A&P mechanic with Inspection Authorization.

We have had difficulty with air getting into the brake system on a Piper PA-28R-200 for some time. The foot brakes would stay up for about two weeks after bleeding, then become spongy.

Bleeding air out of this system is somewhat different than most aircraft. First fill the system with fluid, from each wheel up to the reservoir, then work the hand brake to build pressure in the system. Then, loosen the nut on the brake line on top of the foot cylinder close to the hand brake, and let the air out.

Snug the nut each time before working the hand brake again. When the air is out, do the other foot cylinder in the same manner and you should have brakes. Be sure to keep the reservoir filled while bleeding.

Now, how does the air get in this system without fluid leaking out? It is sucked in by the hand brake, either by a loose hose or a bad fitting between the top of the hand brake cylinder and the reservoir. Usually the hose has become hard with age, and the spring clamp is not adequate for a tight seal.Operating Handbook For Power Settings
By Gene A. Anders

A few additional comments concerning rpm vs. Manifold Pressure.

The August, 1980 Aero Magazine, contained an article relevant to my question and I have attached it to this letter. The article was reprinted from the Avco Lycoming Flyer.

Basically, the article states that the combinations of rpm and manifold pressure shown in the cruise power charts of the airframe Pilots Operating Handbook have been flight tested and approved by the airframe and powerplant engineers, including such settings 2,100 rpm and 24 inches of manifold pressure if they are in the power charts.

Anyone for Super Tips

By Lonnie Workman

I have owned my bird for more than eight years now and am totally familiar with how it handles. After installing Super Tips about amonth ago I am astonished with the difference.

The takeoff roll is reduced by about 100 feet and top end is the same. However, the big difference is in other performance ranges. 61V now stalls at 55 clean and45 dirty, with power off. With power on, the airspeed is somewhere below 40 mph indicated and at an angle that makes one want to hold on to something.

I now rotate at 50 mph and climb, initially at 60 mph with 25 degrees of flaps. After initial climb I transition to 85 mph with900 fpm showing. Once reaching 1,000 AGL I pick 100 mph for cruise climb at about 500 fpm. Approaches are made at 60 mph, full flaps and about 1,500 rpm with a resulting 500 fpm descent. There is still enough lift being generated at flare to float for about 200 feet. I am not getting theses figures from a new engine either; mine bas about 1,400 hours on it.

A friend of mind has a 67 140 with Super Tips and his does the same thing. We fly out of a 2,200-foot grass strip with trees on the ends and neither of us have any qualms about going out at gross.

One last thought, the airplane is much more stable now; 60 degree bank turns at 70 mph give the impression of being on Rails.

Vacuum Pump Precautions

A potentially hazardous condition exists on all light aircraft using dry air pumps manufactured by Airborne Manufacturing Company.

Tests conducted indicate a deficiency in the shaft seal design and that engine cleaning procedures, normally associated with routine annual and/or 100-hour inspections, may cause harmful agents, such as Stoddard solvent to be ingested and cause premature failure.

Because solvents of this type rapidly attack the carbon bearing, vanes, and rotor used in this type of pump, the failure can take place quickly and with little or no warning.

To prevent such failures, the following protective actions are recommended when cleaning aircraft engines:

(1) Carefully cover the coupling area between the pump and the engine drive shaft so that no cleaning solvent can reach the coupling or seal.

(2) Replace the vacuum relief valve filter after cleaning the equipment in the engine compartment BEFORE starting the engine.

These precautions are particularly applicable to single-engine aircraft where no backup vacuum supply is available.

Interested In Speed Fairings

C. Bruce Taylor, of Birmingham, Michigan wanted to know about the possibility of installing the newer wheel fairings on his 180C. The reply:

As you know, the main difference between the 180C and the Archer is the wing design, which cuts down on drag (with a trade-off loss of short field take off ability).

When the Archer first appeared it was somewhat faster than the 180, but apparently Piper was concerned because the book figures were not quite as hot as for its rival, the Cessna 182.

So, in 1978, Piper introduced new design wheel pants and, at the same time, announced that several knots additional airspeed had been gained. I remember reading several aviation writers opinions that the gain was more in the minds of advertising copy writers than in actual performance.

Nonetheless, it is possible that two or three knots increase in top speed could have been achieved over the earlier Archer. Unfortunately, I know of no conversion kits available. No doubt, the current wheel pants could be purchased from your Piper dealer, but whether they would fit without modification and whether or not you would need an STC to put them on the plane I do not know.

You might check with your mechanic on this and let us know whether you are able to make the conversion and whether it results in a measurable increase in speed.

Wants Parts Catalog

Many members need shop manuals or parts manuals for their planes. Robert E. L. Keller, of Yardley, Pennsylvania, needed a parts catalog (airframe) for his PA-28-180C (1976) with 0-360-A4A engine.

The answer: Piper no longer publishes the parts catalogs except in micro fiche. However, they are available from ESSCO, 426 W. Turkey Foot Lake Road, Akron, OH 44319. (216) 644-7724. The last price list I saw showed a PA-28 parts catalog for $48 (1982).

Wants Long Range Tanks, Wing Leveler

Albert Finkelstein, of New York City, wanted to know if any STC has been issued for carrying extra gas on the 140--wing tips or otherwise. He also wanted to know if an STC exists for a wing leveler and if so who has one for sale.

The answers: First of all, I know of no STC for extended range tanks for Cherokees. Flint Aero makes such tanks for Cessnas, but they are obviously in more need of them than Cherokees.

Wing levelers, also known as two-axis autopilots, are available. Piper used to make one, called Piper Auto Flite, which is now sometimes available on the used market.

Two good sources of additional information are Accutrac, available from Brittain Industries, P.O. Box 51370, Tulsa, OK 74151 and Tejas Avionics, 205 Corsair Dr., Georgetown, TX 78628.

Installed Shoulder Harness

By J. E. Ellis

Attached is a service letter from Piper (Service Spares Letter SP-252A) on a shoulder harness kit for older Cherokees. I installed them in my 1966 180C, and I have been quite satisfied.

Some items:

The mount on the sidewalls, next to the rear seats. This limits motion of the rear seat deck to about 18 inches, which could be a big problem for 140's with batteries under here. It also complicates inspections and work on cables running through there.

Piper sells plastic covers, but we found that the open reels look ok, and thought the plastic covers looked cheap (like Cessna panels) and took up too much space.

Price was (1980) around $150.00 plus 3-4 hours installation. The kit, Part Number 760 365 V does not, of course, fit all PA-28's and PA-32's, but Piper dealers should have a list of the serial numbers which apply.

Retractable Shoulder Harness -

By John T. Williams

Robert Mitchell wrote in regard to retractable seat

belts. I replaced my retractable shoulder harness with Piper P/N 0107337-01 inertia reel, $142.33

This was a complete set of seat belts for the front seats and included two shoulder harness inertia reels. These bolt right into place, but the drawback is that the plastic covers will no longer fit since these reels are physically bigger. Anyhow, my 1974 PA-28-140 has metal-to-metal buckles with big, ugly inertiareels! My FBO has suggested that 1 fabricate my own reel covers from fiberglass, but I haven't gotten around to it yet.

With regard to the cold starting problems on the PA-28-140, I have switched to the multi-weight Aeroshell 15W-50 motor oil. The engine cranks easier when cold and acquires oil pressure much quicker. Preliminary indications are that it is using less oil, too. The bad news is that it costs $4.00 per quart.

Artex Battery, Waxing & Wing Leveler

In response to previous letters, David N. Redwine, of Winchester, Kentucky, offered some ideas on Artex Batteries, waxing polyurethane paint, and wing levelers. He wrote:

John Sisca mentions problems with the Artex battery which he put in his Rescue 88 ELT, which was manufactured by Garrett. I have read about many other problems with the Artex batteries not working properly and voiding the warranties on ELT's. Since the long-life Artex battery causes malfunctions, the apparent saving results in false economy.

Mr. Sisca also inquires about a good wax to use on polyurethane paint. He should be aware that you use absolutelv no wax on polyurethane paint, and the application of wax on the paint only one time causes the finish to become dull, from which you can never recover.

Washing the airplane thoroughly with hot water and mild soap (such as dish washing detergent) gets most of the wax off, but can never salvage the dulling of the polyurethane finish. Polyurethane paint gives an airplane the "wet look" by having an artificial oil base on top of the color pigment. Wax ruins that fmish and should NEVER be used on polyurethane.

Finally, Albert Finkelstein inquires about a wing leveler for his 140. The Autoflite, installed by Piper, is made by Edc-Air Mitchell in Mineral Wells, Texas, and is installed under the Piper nameplate. The same, single-axis autopilot, is known as the Century I by Mitchell and is a good basic unit. The Century II, a two axis (roll and yaw) unit is better, although significantly more expensive. Edo-Air Mitchell auto pilots are available from many auto pilot and avionics dealers, including Tejas Avionics.

Simple Touch Aids Starting

- By Charles George

Starting problems can be helped by a touch of oil on the propeller ring gear teeth and the starter shaft bearing, especially the older models where the end of the starter is exposed to the weather. I make this a habit whenever I change oil.

Wing Tips, Wax, And Starting Procedure

- By Joe Morrison

I have installed the Met-Cc-Aire high-performance wing tips on my 67 Cherokee in September, 1981, and have tested them under all conditions of flight and temperatures and find them to be a great improvement over the standard wing tips. They meet all claims of the manufacturer.

I had to drill out about 15 rusted fasteners, however I completed the entire job in four hours using the hole finder that was recommended.

In response to John Sisca's search for a good wax, I would recommend he try Armor-All Ultra Plate. It is a chemical treatment and will not yellow, crack or peel. It seals tbe surface and I have been using it for three years. My Cherokee is not hangared and I apply it every six to nine months, and the paint stays bright and clean and it is very easy to apply and inexpensive.

I buy it at McGuire Base Exchange and have seen it in auto stores. It costs about $2.50.

I read about people having trouble starting their Cherokees and have a tip for 140 owners that always works for me, even at below zero for cold weather starting.

I find that if you place the fuel selector valve on the desired left or right tank, be sure the mixture control is at the full rich position, then get out of the airplane and pull the propeller through 10 times (with the switch off, of course), return to the cabin and prime the engine 4-5 shots. Then pull the propeller through a couple of more times to allow the priming to charge the cylinders.

When returning to the cabin start the engine according to the Piper Cherokee check list for starting and it will start on the first revolution. Sounds like a lot of work, but it only takes about three minutes and it worked for me when preheating failed for others.

Listing of Cherokee STCS

Below is a copy of the special type certificates (STC) listed by the FAA that are applicable to the PA-28 and the Lycoming engines.

The items vary from ski conversions to door stops. Member interest is high in wing tips, propellers and wheel fairings. The list goes on and on, but most items are of very specialized nature and are of limited interest. For example, the 0-320 can be converted to fuel injectionor a turbocharger can be added. It can also be converted to 100 hp rated for 1001130 octane fuel.

Note: addresses given are listed by the FAA. In many cases, owners have changed address and no updated information is available.

For wingtip conversions, contact Isham Aircraft, P.O. box 12172, Mid-Continent Airport, Wichita, KS 67277;

Upper Valley Aviation, Inc., Harvey J. Ferguson, McAllen, TX 78501; Met-Co-Aire, P.O. Box 2216, Fullerton, CA 92633 and Madras Air Service, Route 2, Box 122S, Madras, OR.

For aconstant-speed propeller, contact I-Iutchinson Aircraft Service, P.O. Box 524, Borger, TX 79006; Propellers, Inc., 5802 S. 228th Street, Kent, WA 98031; and Avcon Industries, Inc., 1006 W. 53rd street, North Wichita, KS 67204. For wheel fairings, contact Van's Aircraft, Route 2, Box 187, Forest Grove, CO 97116.

A list of STC's for PA-28 aircraft follows:

SA1-649 Lube oil filter; Fram Corp. 105 Pawtucket Ave. Providence, RI 02916

SA8PC Installation of baggage compartment kit, behind rear seats. Island Flight Center, Inc., 203 Lagoon Drive, Honolulu, HI 96818

SA100EA AF-510, 512A or 512B autopilots. Aircraft Radio Corporation, Boonton, NJ 07005

SA110S0 Electric Trim System. Piper Aircraft Corp., Vero Beach, FL

SA180EA Geared Starter. Turner Field, Inc., Prospectville, PA 19077

SA164SW Automatic Pilot. Mitchel Industries, Inc.*

SA178WE Full-flow oil filter. Winslow Aerofilter Corp., 4069 Hollis Street, Oakland, CA 94608

SA222SW Hartzell propeller and cowl rework. Hutchinson Aircraft Service, PO. Box 524, Borger, TX 79006

SA224CE A3000 main and NB1200 nose skis. FluiDyne Engineering Corp., 5900 Olson Memorial Highway, Minneapolis, MN 55422.

SA236SW Piper Auto Control II automatic pilot. Mitchell Industries.*

SA246SW Nose Cowling, Modified. Hutchinson Aircraft Service, PO. Box 524, Borger, TX 79006.

SA263EA Engine mount modification to permit Lord Mounting Kit. Lycoming Division, AVCO Corp., Williamsport, PA 17701.

SA319CE Model 2500 Wheel Skis. Fluidyne Engineering Corp., 5900 Olson Memorial Highway, Minneapolis, MN 55422.

SA369SW Automatic Pilot pitch trim system and lateral guidance radio coupler, Mitchell Industries, Inc.*

SA481SW Removal of door for parachute jumping. Erwin J. Fusilier, 9617 Fulton Street, Houston, TX 77002.

SA511SW Stabilizer. Mitchell Industries*

SA530SW Automatic Pitch Trim System, Mitchell Industries*.

SA556SW Constant-speed propeller. Hutchinson Aircraft Service, P.O. Box 524, Borger, TX 79006.

SA601WE Flight controls system, B-4, including pitch assist and altitude hold. Brittain Industries, Div. Narco Scientific, Commerce Drive, Fort Washington Industrial Park, Fort Washington, PA 19034.

SA645WE Autopilot and optional nav-coupler, add on BI-300, & BI-301. Brittain Industries, Inc.*

SA646WE Dynertial pitch assist. Brittain Industries, Inc.*

SA707SW AD127 Automatic Flight system. Mitchell Industries.*

SA708SW Plane booster flight wing tips. Upper Valley Aviation, Inc., Harvey J. Ferguson, McAllen, TX 78501

SA880WE New design fiberglass wing tips. Met-Co-Aire, P.O. Box 2216, Fullerton, CA 92633.

SA1191WF Removal of baggage door for aerial photography. Kelsey Ellis Air Service, Municipal Airport, Salt Lake City, UT 84101.

SA1354WE Stability augmentation system. Brittain Industries.*

SA1469WE Installation of Brittain Model B2C flight control system. Brittain Industries.*

SA1470WE Installation of Brittain stability augmentation system. Brittain Industries.*

SA578EA Installation of Monitair angle of attack kit. Rosemont Engineering Co., 12001 W 78th Street, Eden Prairie, MN 55343.

SA687SO Installation of flight attitude alerting system. Aircraft Instruments, Inc., 420 Lincoln Road, Suite 206, Miami Beach, FL 33139.

SA913EA Installation of Elano beatermuffler. Elano Corp., 2455 Dayton-Xenia Road, Xenia, OH 45385.

SA1189SW Air circulator. Ves-Kol, 2805 National Drive, Garland, TX 75040.

SA1192EA Installation of Safe Flight Speed control system. Safe Flight Instrument Corp., P.O. Box 550, White Plains, NY 10602.

SA2052WF Installation of Hartzell propeller after conversion of engine to Lycoming 0-320-E1A. Propellers, Inc., 5802 S. 228th Street Kent, WA 98031.

SA2325WF Replacement of bulkhead panel with fiberglass baggage compartment. Chaffee Aircraft Service Corp., 2105 Valley Blvd., Colton, CA 92324.

SA2706SW Lycoming 0-320-D3G engine. RAM Aircraft Modifications, P.O. Box 5219, Waco, TX 76708.

SA2842WF Installation of Novastar anti-collision lighting system. Symbolic Displays, Inc., 1762 McGRaw Ave., Irvine, CA 92705.

SA3071WF Installation of Bendix electric auxiliary fuel pump. Harry R. Dellicker, P.O. Box 746, Strathmore, CA 91267.

SA3415WF Installation of Lycoming engine and Sensenich propeller. Arthur M. D'Onofrio. Jr., 206 Winthrop Blvd., Cromwell, CT 06416.

SA1331CF Installation of 160 hp Lycoming engine and repitched Sensenich. W.A. Pearce, 120 N. Old Manor, Wichita, KS 67208.

SA2NW installation of Van's Aircraft fiberglass wheel fairings. Van's Aircraft, Rte 2, Box 187, Forest Grove, OR 97116.

SA363EA Installation of Minitair angle of attack and stall warning kit. Rosemount Engineering, 12001 W. 78th Street, Eden Prairie, MN 55343.

SA549NW Installation of Demers wing tips. Madras Air Service, Rte 2, Box 1225, Madras, OR 97741.

SA600NW Installation of forward facing whitelights, clear

plastic wing tip tank nose cone. Robert C. Cansdale, Bob's Aircraft Supply, Thun Field, Puyallup, WA 98371

SA793CE Installation of Lycoming engine and Hartzell propeller. Avcon Industries, Inc., 1006 W. 53rd Street, North Wichita, KS 67204.

SA819EA Alteration to replace standard anti-collision light with Grimes red or white strobe kit. Grimes Manufacturing Co., 515 N. Russell Street, Urbana, OH 43078.

SA822SW Mitchell automatic flight system (Century III). Mitchell Industries, Inc.*

SA979EA Installation of L/R wing tip transparent fairings and sensor mounting. Rock Avionics Systems, Inc., 412 Avenue of the Americas, New York, NY 10011.

SA1072CE Installation of wing leading edge cuffs and droop tips. Horton STOL Craft, Wellington Municipal Airport, Wellington, KS 67152

SA1123EA Installation of Devore vertical tail floodlights. Devore Aircraft Corp., Suite B., 6104 Kircher Street, NE, Albuquerque, NM 87109.

SA1227CE Installation of dorsal fin. Isham Aircraft, P.O. Box 12172, Wichita, KS 67212

SA1228CE Installation of wing tip extension. Isham Aircraft.

SA1157SW Mitchell Flight system (Piper Autoflite II) Mitchell Industries.*

SA1272SW Automatic Flight System (Century I & tracker). Mitchell Industries.*

SA1317CF Chrome plated brake installation. Engineering Plating and Processing, Inc., 641 Southwest Blvd., Kansas City, KS 66103.

SA1373CF Install third window. Isham Aircraft, PO. Box 12172, Mid Continent Airport, Wichita, KS 67277.

SA1741WF Installation of hand control for rudder system. William Henry Blackwood, Route 3, Box 744B3, Escondido, CA 92025.

SA1898SW Installation of wing leading edge cuff. flow fences. Barbaraor Bob Williams, Box431,213 North Clark, Udall, KS 67146.

SA2179WF Installation of leading edge cuff, drooped ailerons, wing stall fences. Charyl C. Robertson, 15400 Sunset Highway, Bellevue, WA 98007.

SA3026SW-D Mitchell auto flight system (Century IIB). Mitchell Industries*.

SA3165SW-D Automatic flight system (Autocontrol IIB). Mitchell Industries.*.

SA3166SW-D Automatic flight system (Piper Autoflite II). Mitchell Industries*.

SA3435WF Installation of flexible oil hose assembly. Aircraft Metal Products Corp., 4206 Glencoe Ave., Venice, CA 90291.

SA3687WF Installation of an air/oil separator. Walker Engineering Co, 2240 Sawtelle Blvd, Los Angeles, CA 90064.

SA228GL Installation of Lycoming 0-320-D3G engine. W. Irvine Young, 54 Atomic Avenue, Toronto, Ontario, Canada.

SA1716SW Mitchell Automatic Flight System (Autoflite II). Mitchell Industries, Inc.*

SA1717SW Mitchell Automatic flight system (Auto Control III). Mitchell Industries.*

SA2969SW Lycoming 0-320-D3G Engine. RAM Aircraft Modifications, P.O. Box 5219, Waco, TX 76708.

SA3012WF Installation of Pathfinder auto pilot system. Astronautics Corp, 2416 Amsler St., Torrance, CA 90505.

SA1075S0 Wing Ding door stop. William J. Stephenson, Pro Flite of Vero, Inc., P.O. Box 998, Vero Beach, Fl 32960.

SA3065SW-D Mitchell automatic flight system (Autocontrol IIIB.) Mitchell Industries.*

SA3066SW-D Mitchell automatic flight system. (Autoflite II). Mitchell Industries.*

SA3095SW-D Mitchell Automatic flight system. (Century I). Mitchell Industries.*

SA3096SW-D Mitchell Automatic flight system. (Century IIB). Mitchell Industries.*

SA1971WE Installation of Model ARB-3 automatic downed aircraft marker. Burton Instrumentation, Inc. 2050 Airway Ave., Box 822, Fort Collins, CO 80521.

SA1484WE Installation of Brittain Industries Model B2C flight control System. Brittain Industries.*

SA419GL Installation of Tull Microwave Landing System. Burlington Northern Airmotive, 3600 E. 70th Street, Minneapolis, MN 55450.

SA3352SW Installation of Mitchell automatic flight system (Century 21). Mitchell Industries.*

SA1789WE Installation of Brittain lateral stability augmentation system. Brittain Industries, Inc.*

SA1792WE Installation of Morse protection system. Morse Products Mfg., 12960 Bradley Ave., Sylmar, CA 91142.

SA2213WF Conversion of Lycoming engine and installation of Hartzell Propeller. Propellers, Inc., 5802 S. 228th St., Kent, WA 98031

SA3233WE Installation of Symbolic Display's Novastar anti-collision light. Symbolic Displays, Inc., 1762 McGraw Ave., Irvine, CA 92705.

SA962SW Piper automatic flight system AK271 (Altimatic). Mitchell Industries.*

SA1737SW Mitchell automatic flight system (Altimatic III-BI). Mitchell Industries.*

SA1460SW Mitchell automatic flight system (Piper Autocontrol III). Mitchell Industries, Inc.*

SA2202WE Installation of contoured leading edge. drooped ailerons, fuselage flap. Charyl C. Robertson, 15400 Sunset Highway, Bellevue, WA 98004.

SA2490SW Wing tip extension aid dorsal fin. Isham Aircraft, P.O. Box 12172, Mid-Continental Airport, Wichita, KS 67277.

SA3004SW-D Automatic flight system (Piper Autocontrol IIIB) Mitchell Industries.*

SA3093SW-D Automatic flight system (Century1 with omni tracker) Mitchell Industries.+

SA3094SW-D Automatic flight system (Century II-B with radio coupler). Mitchell Industries, Inc.*

SA3841WF Installation of fuel flow indicating system.

Symbolic Displays, Inc., 1762 McGraw Ave., Irvine CA 92174.

SA194GL Installation of Lycoming IO-360-C1C6 engine. Shelby Aircraft Engine Parts, Inc., P.O. Box 454, Shelbyville, Il 62565.

SA1183CE Installation of two-axis flight control system with flight command indication. King Radio Corp., 400 N. Rogers Road, Olathe, KS 66061

SA420GL Installation of Tull Microwave landing system. Burlington Northern Aimiotive, 3600 E. 70th Street, Minneapolis, MN 55450.

SA3161SW-D Automatic Flight System (Piper Autoflite II). Mitchell Industries.*

SA3162SW-D Automatic flight system (Piper Autoflite II). Mitchell Industries.*

SA3194SW-D Automatic flight system. (Piper Altimatic IIIC). Mitchell Industries.*

SA3195SW-D Automatic flight system. (Century III). Mitchell Industries*

SA3196SW-D Automatic flight system. (Century IIB with radio coupler.) Mitchell Industries.*

SA3197SW-D Automatic flight system. (Century I with omni tracker.) Mitchell Industries.*

SA148RM Install fuel flow meter and related systems. Symbolic Displays, Inc., 8895 Montview Blvd., Hangar B., Denver, CO 80220.

SA1383CF Installation of EDO AIKE propeller governor. EDO AIRE, Wichita Division, 1326 S. Walnut Street, Wichita, KS 67213.

SA3771WF Installation of Fueltron IG digital fuel flow and totalizer system. Silver Instruments, Inc., 2346 Stanwell Drive, Concord, CA 94520.

SA1498CF Installation of King KFC 200 automatic flight control system. King Radio Corp., 400 N. Rogers Road, Olathe, KS 66061

SA3323SW-D Automatic flight system (Piper Altimatic IIIC). Mitchell Industries.*

SA3336SW-D Automatic flight system (Century III). Mitchell Industries.'

SA3359SW Mitchell Century 41 autopilot/flight director, Mitchell Industries.*

SA3360SW-D Automatic flight system (Century 21). Mitchell Industries.*

SA1131EA Installationofradomepodonright wing. David L. Stanislaw, d/b/a Airquip, Horsham Road, Ambler, PA 19002.

SA2143WF Installation of drooped leading edge, drooped ailerons, wing stall fences, drooped wing tips. Robertson Aircraft Corp., 15400 Sunset Highway. Bellevue, WA 98004.

SA2147WF Brittain Industries B-7 flight control system Brittain Industries, Inc.*

SA3187WF Modification of aileron control system by addition of aileron centering springs and installation of Pathfinder autopilot systems. Astronautics Corp. of America, 2416 Amsler St., Torrance, CA 74151.

SA4103SW Installation of Brittain B-5 flight control system. Brittain Industries.*

SA1156EA Installation of radome pod on right wing. David L. Stanislaw, d/b/a/ Airquip, 1435 Horsham Road, Ambler, PA 19002.

SA281AL Installation of large nose gear fork and nose gear tire. Tibetts-Herre Airmotive, P.O. Box 110, Naknek, AK 99633.

SA472SO Installation of band control for rudder pedal. Wheelchair Pilots Association, 4211 Fourth Ave. S., St. Petersburg, FL 33711

SA757SW Automatic flight system with Century II autopilot optional radio coupler. Mitchell Industries.*

SA788SW Piper Auto control II automatic pilot. Mitchell Industries.'

* The following have numerous STC's: Brittain Industries, Inc. P.O. Box 51370, Tulsa, OK 51370; and Mitchell Industries, Inc., P.O. Box 610, Municipal Airport, Mineral Wells, TX 76067.

This article was submitted by Donald R. Mays, Orlando, FL 32806.

Comments On Engine Noise Problem

Two members became involved in adiscussion of a noise which commonly was heard in both 235 models and PA-32s. James Hanson, of Sacramento, California, provided the following comments concerning this engine noise.

I am the owner of a 1980 PA-28-236 (N118T) which I purchased new. I have experienced the same engine noise problem under all of the conditions described by Mr. Webster and am still seeking a satisfactory explanation.

I, too. have been informed by mechanics that the sound, while not normal, is "typical" with one possible cause being valve flutter. 1 have been flying Cherokees for almost 20 years and do not remember ever experiencing this particular sound.

William S. Webster, of Ashland, Virginia, added some additional remarks:

One of my frequent stops is Charleston, SC, and the local FBO uses a substantial number of Cherokee and Lance aircraft for charter. I have inquired thereof and they provide a local consensus.

They feel the "non-problem" is associated with the air intake ducting, the air filter, and the induction manifold. They say the sound is often eliminated or minimized through tightening of the connections and especially the air filter. I think they are right.

Meanwhile, I have ten months and three hundred hours with this aircraft. I have had four compression checks and the lowest had been 76/80. Plugs all seem to be in superb condition and I'm burning one quart each twelve bows (Phillips X/C). While there is apparently no disaster taking place if the sound persists for more than four seconds I alter the power profile just on general principles.

Engine Overhaul Horrors

By Terry Lee Rogers

Pilots tend to view engine overhauls like any other commodity. Spring for an overhaul and...Presto, you get enough engine to last for another 2,000 hours of flying.

Well, many pilots know this is not necessarily so. The manufacturer's recoinmended TBO is only an estimate of how many hours an engine should last between overhauls. How long an engine will last depends on many factors, including the skill of the pilot flying the plane. And all TBO figures assume that a quality overhaul was performed and that it was done correctly.

Nonetheless, there are numerous horror stories of blown engines or engines which use a quart per hour of essence of dinosaur just hours since a major rebuild. So the question is what went wrong on these engines and how can you keep it from happening to you?

First, when discussing the potential horrors of engine overhauls, remember there are two types of problems - those which come as a complete surprise (as when they develop after a rebuild by a quality shop) and those which could have been expected.

What types of horrors are in the expected class? Problems which show up shortly after a rebuild to "service limits" overhaul. And you should probably expect such problems if you purchase an airplane with "0" since major overhaul or just a few hours on the engine unless you KNOW who did the overhaul and what parts were replaced.

An engine in which parts are reused to save money even though they are approaching failure (though within manufacturer's specifications at the moment) is not one which you can reasonably expect to make it anywhere near TBO.

Likewise, an engine with just 500 hours since overhaul is not necessarily in good shape if those 500 hours were accumulated over a ten year period - that is just 50 hours a year, and that is too little flying to keep an engine in good shape.

Enough has been written about cheapie overhauls and aircraft which fly irregularly to provide adequate warning to most pilots to beware. But many people do not know that mistakes occur even when an engine is overhauled by one of the premier rebuild shops. Unfortunately, everyone is human and even the best of shops have their warranty claims and their embarrassing errors to live down.

It would he nice if you could spot shop errors upon taking delivery. Oops! The cylinder hone on cylinder number three is not right - let's fix it now. But in the real world it does not happen that way. Sometimes it takes years for a problem to show up.

And of course, there are engine problems which develop overtime which have nothing whatsoever to do with errors in overhaul. This leads to confusion and, at times, to a lot of had feeling between the overhaul shop and the aircraft owner. But back to unexpected overhaul errors. What types of problems are we talking about?

Overhaul mistakes break down into two distinct types - top end and bottom end problems, with top end errors predominating. Let's take a look at some common errors and how to spot them.

Top End Errors

The top end of the engine is where the real action occurs and this is where the majority of the problems occur. Luckily, this is the section of the engine which is easiest to work on so correcting prohlems is a lot cheaper than it would be if the case had to be tom apart.

What types of problems occur?

1. Poor cylinder finish (mainly steel cylinders). When the cylinder is refinished, the surface should have just the right amount of roughness to cause rings to seat properly. Too much or too little will cause problems with ring seating and oil control. The final cylinder finish is applied with a hone whichgenerates a specific pattern. A good operator is required to get that pattern.

2, Improper Choke. Cylinders in air-cooled engines have a choke - they are tapered slightly inward toward the cylinder end. Air-cooled cylinders have a high temperature gradient from top to bottom and without a choke they would tend to expand at the top and end up with an excessive taper outward at the top. Unfortunately, some cylinders are refinished utilizing a hand-held hone (among other evils) and the choke is destroyed.

3. Poor chrome plating (chromed cylinders only.) If the chrome is improperly applied to a cylinder it may lack the small channels necessary to hold oil. In effect, the surface may be too slick to hold oil. Rings fail to break in and you have yourself an oil burner.

Break-in is especially critical for chromed cylinders. It is necessary to avoid running the engine on the ground and to fly the engine hard.

And some engines just fail to break in. If your en-

gine is using a quart of oil every two or three hours it may improve as the break-in occurs. But after about 50 hours the oil consumption will stabilize. If it is still using oil at that point you need to discuss this with your overhaul shop. It may be time to talk warranty adjustment.

4. Chrome rings in chrome cylinders. Unfortunately, chrome plating can be like aspirin. A little may be great for your headache, but the whole bottle can do you in. Chrome rings do NOT work in chrome cylinders. The chrome rings will not wear in and adjust to the dimensions of the cylinder walls. Chrome cylinders must have cast iron rings to permit the cylinders to break in properly.

5. Improper valve installation. Lycoming engines have had their share of valve prohlems and improper installation during overhaul is one of the causes. When valve guides are installed they need to he hued to the seat center line - if they are off center they will cause wear which will dramatically cut the life of the engine.

There have been cases, too, where the wrong valve guides have been installed or where the intake and exhaust guides have been reversed.

Seat-grinding is a critical task - the seat contact area must be ground at the proper angle within very tight tolerances. If the valve sits too high or low the lifter may not be able to compensate for the lash variation.

A top quality overhaul shop does not simply remove and replace guides. Instead, it will precision linebore the guide boss to ensure that the new guide will be centered with and perpendicular to the seat.

If the guide is badly off center or tilted, its relationship to the rocker arm may be changed such that extra side-forces are applied to the valve. This can cause poor seating, high contact stress and even valve breakage.

6. Unadjusted tappet clearance. Valve lash in an aircraft engine is adjusted by hydraulic valve lifters -just like in a car. But these lifters can adjust lash only so far When an overhauled engine is put back together - especially in cases where the crankcase has been machined - the cylinder distances outward from the crank vary minutely. When the engine is reassembled it is necessary for the mechanic to check the tappet clearance and adjust for discrepancies with push rods of slightly varying lengths. Otherwise the valve adjustment will always be off and burned valves will be the result.

The Bottom End

Although bottom end problems are rare, they are expensive when they occur. Repairing them is not as simple a procedure as merely pulling ajug - it may involve disassembling the entire crankcase.

Here is a list of some of the more common problems which result in the engine's lower half after overhaul:

1. Main bearings too tight. If the main bearings are too tight, the engine will not develop as much power and bearing problems are likely to develop in the future. It is better to fit the hearings a bit on the loose side rather than the tight side. The overhaul shop should use either the dye test or film-squeeze method of determining and adjusting for bearing fit. Simply assembling bearings based on the dimensions on the box is not a method conducive to long engine life.

2. Camshaft and tappet problems. A major problem in the bottom half of the engine is the camshaft and tappet. This is where some of the most expensive problems occur, and some of them may take years to develop.

An improperly ground cam may self destruct within 200 to 300 hours. Make absolutely sure that the cam is ground by a top-flight shop with FAA approval. Better yet, insist on a factory new camshaft and tappets. This problem is so expensive to cure later that a little money spent early may be the most economical way to go in the long run.

3. Improper application of case sealant. Many shops use RTV-102 to seal an engine with good results. It is a good modern method of engine sealing replacing some of the older methods. But it must be done properly to prevent creating a leaker. Lycoming has covered the topic in Service Instruction 1125.

4. Wrong counterweight pins or bushings. The crankshaft uses counterweights to achieve balance. However, it is possible to use the wrong weights or pins - the hardware looks the same. You end up with an engine with bad balance problems which may jar your teeth out and which may rapidly destroy spinner backplates.

In Summary

This certainly does not cover all the errors which are possible. It fails to mention such problems as the engine with the 318 inch socket left inside the crankcase. But it does cover some of the more common problems which do occur in engines delivered by the better quality shops.

What are the chances than some of these problems will occur in an engine which you have overhauled? Most good shops deliver quality consistently - problems occur only on a very small percentage of engines. Otherwise, a shop would soon be out of business based on the number of warranty claims.

However, when a problem does hit home it is expensive, and anyone having an engine overhauled should be aware of the possibility of a problem and the necessity to seek warranty coverage when problems do occur.

Compression ·A Maintenance Aid

by Howard Fenton

Throughout the aviation maintenance industry the compression check is used as a maintenance aid.

On occasion, when oil analysis indicates a possible upper-cylinder problem, I suggest a compression check and too often am asked, "What is that?" So let's look at just what is meant by a compression check.

There are two types. The direct or automotive type, and the differential. I personally consider the differential

best as it is simple and precise in locating specific problem areas.

A compression check should be made anytime an upper cylinder problem is suspected. Loss of power, increased oil consumption, soft cylinders when hand-pulling the prop though during preflight (mag off, aircraft secured) or when oil analysis indicates a possible upper cylinder problem. It is also a part of the 100-hour and annual inspection,

This is what your mechanic will do. He will run your engine up to normal operating temperature prior to the compression check.

Next, he will put a standard 80 psi input pressure into the cylinder through a spark plug adaptor and read the pressure loss. A 25 per cent loss is generally recognized as the maximum allowable, or a reading of 60180. Should a low reading result, recheck and cross check before removing any cylinders.

Spark plugs also tell a story--check those removed from any suspect cylinder. Use a Boroscope or at least a gooseneck flashlight to check piston top and cylinder walls.

Consider the history of the engine, its maintenance, previous difficulties and pilot observations. Only then should a decision be made based on evaluation of known factors.

In summary, a differential compression check is a good tool for preventative as well as diagnostic maintenance.

Panel Lighting Suggestion

By John Sisca

The instrument lighting on my Warrior needed improvement when I bought it one and a half years ago, The plastic instrument panel cover was originally green to match the interior and 1 wanted to paint it flat black.

I removed the plastic panel cover off both sides of the panel and masked off the "reminder stickers" (cross-wind, maneuvering speed, etc.)

First I painted the back of the panel covers with the so called silver "chrome" spray paint found at most auto part stores. Beware of over spray getting on the front if you're not going to repaint it too. I did this to increase the bounce lighting behind the panel cover.

I then sprayed the front flat black. It would be a good idea before you start painting anything to wash both sides of the panels a couple of times to get rid of any dirt or oil.

Before reinstalling the left panel cover, I glued two flat washers behind each mounting screw holes except the ones at each corner. This is to raise the panel cover away from the instrument panel a little bit more to give each light bulb a greater area to reflect off.

The result is excellent. Now each instrument is sufficiently lit.

Another thing I never understood was why the rocker panel switches are not lit. This was easily solved by installing an instrument post light (available from mail order houses for $15) above the switches.

Oil Cooler Causes Unexpected Landing

By John Nielsen

Last Friday I experienced a problem in my 1967 140 which may interest other CPA members. Shortly after take off, a total loss of oil quickly converted my Cherokee into a glider and necessitated a "short field landing" in a city street. The culprit turned out to be a broken line to the oil cooler.

Both feed and return lines had fire sleeves which makes inspection of the lines difficult if not impossible. In addition, the check list used for the annual inspection does not include checking the oil lines in the 1212 separately listed items. Only one item comes close: "inspect oil cooler, leakage and attachment."

Although it goes without saying that the redundancy in fuel and ignition systems makes for pretty reliable engines in aircraft, there is only one lubrication system and you cannot stay aloft very long without oil. Fortunately I did not have a recent oil change so the oil 1 lost was not new.

Comments On Hot-Running Lance

By Gary Gear

Ours is a 1978 "T" tail we bought with only feny time. Since new, I have flown more than 800 of its 875 hours. Lance engines run hot!

Arizona summers call for climb airspeeds about 10 knots above the best-rate-of-climb airspeed. During climb, oil temperature is nearly always at or within needle width of red line. Long, slow climbs seem to be the rule.

Climb performance is not really that bad since I'm usually 300 to 400 pounds under gross (nobody will fly with me when it is 120 degrees outside.)

1 never got that concerned, because temperatures stay well below red-line during the cruise and nobody flies for fun in the middle of the summer out here. Instrument brush-ups, stalls, frequent landings and the like are a real no-no during the summer. But this plane should have had cowl flaps.

RAM Conversion Report

BY Harry E. Lutz

Like most CPA members, I am an avid Piper fan. N5415S is a 1971 full IFR 140, including a Britain wing-leveler and tracker, which I purchased in 1978 with 1321 hours on it. My son used it to obtain his instrument, commercial CFI and CFII ratings and I for my instrument. We have not had problems except that the engine ran out which is what I want to tell you about.

In January we installed a new 0-320-D3G 160 hp which is STC'd for the 140 by RAM. We have been extremely well pleased with the perfonnance.

There is no noticeable difference in the cruise speed, maybe because we had already helped that earlier

with Met-Co-Aire wing tips, but it climbs like a different aircraft.

We can now use it as a four-place airplane and have done so on 70 degree days with full tanks and a climb out rate of 500 to 600 feet per minute. We now have nearly 100 hours on the new engine and would endorse it for anyone who sincerely likes their 140, but just wants better perfonnance.

Keep Firewall Clean

By Bud Groner

Notice the wetness of oil on the firewall of your plane? You can prevent it by modifying the oil vent tube on all Cherokee 150 and 180 engines and most others too.

You will find a 1/2 inch diameter tube coming out of the top of the engine, running over to the firewall and then exiting the bottom of the firewall at the belly of the plane.

About midway down this tube, notice a small, 1/4 to 3/8 inch hole, pointed toward the firewall. DO NOT close this hole or tape it shut as Piper says there is a reason. (I was told it acts as an exit for engine breathing if the main tube gets clogged with mud or ice.)

The solution is to purchase, at your local auto parts store, one of the small breathers used on the side of the air cleaner on Fords and Chevrolets.

You may purchase these at a dealer or parts store by ordering the following: Ford Part FA-87 Autocraft Breather; Chevrolet Part FB-59 Delco or AC Breather. (Price should be under $2.00).

Remove the plastic housing from the breather and use the filter material only. This material is made of a controlled porosity filtering material and stays put under heavy pressures. You simply clamp this material over the hole with small hose clamps or nylon tie straps. If the bottom hole gets clogged with ice or mud, the tube will still breathe through the recently installed filtering material, but in normal operation the oily fumes will exit only out the bottom of the tube. Presto...a clean firewall!

Suggested Auto Pilot Repair

By Jim Harris

My plane is a 1968 Cherokee with the Piper Autoflite, an all electric system without any vacuum servos.

We had trouble with system and kept sending the unit back and forth to the Edo Aire factory for two years. The unit had more time on UPS trucks than it did in the plane.

Luckily, I ran into the Edo Aire field representative, D. J. Davis, by chance at the Airport in Valdosta, Georgia. After 12 minutes of troubleshooting, he found the problem.

First, there is a reversing switch located on the servo. It is not used to reverse polarity during nonnal operation--it is just used for assembly purposes. During the years, the sliding switch's contacts became corroded and caused intermittent operation. The solution was simple: we merely hot-wired around the switch.

Second, the electric servo had been used so much that the windings or brushes were worn out or deteriorated. It would have cost about $250 to send back to the factory, but I worked out a deal with the Valdosta Edo Aire dealer to do the work for $100.

I do not know whether Mr. Davis is still with Edo Aire, but he sure knew his stuff and did and excellent job.

Discovered Gyro Problem

By Gary A. Otto

I would like to expose a potential danger to gyro instruments that I have had recent experience with. I had both of my gyros overhauled last October and now have 100 hours of operation on them with a serious problem showing up on the DG.

Upon removal and inspection it was found that the air inlet hose had begun to disintegrate due to age (about 14 years) and had ruined the bearings in the DG.

The system filter was replaced at time of overhaul, but the thought of changing out the hoses never occurred. The hoses appeared to be in good shape.

I have since had the gyros brought back to overhaul condition with the help of Barfield Instrument Corp. in Atlanta , GA (who reworked them at a very reasonable cost considering my predicament) and have replaced the hose with clear plastic which allows any problems to be spotted at a glance.

It took considerable hunting to find a source for the hose, but I found the hose made by Parker, part number PV106-1 318 inch I.D. clear plastic hose. The Orton Company, in Norcross, GA (1-800-282-5685) supplies the hose at about $1.50 per foot.

This hose has a thick wall which resists kinking and makes it easy to work with. Knowing about this potential hazard last year could have saved me considerable dollars.

CAUTION: Even new rubber hoses pose a danger to newly overhauled gyros. Many rubber hoses have an inner coating of fine particles (talc) on the rubber which can be drawn into the gyro and cause premature failure.

Make sure the inlet hoses are clean. (That is why the clear hose is suggested.)

Clean Starter Connections In Turbo Arrow

By Arthur B. McKaig

As part of the Cherokee family, my 1977 Turbo Arrow has been afflicted with slow cranking--mainly the inability of the starter to get through the fist compression stroke without three or four tries.

Rather than replace the battery cables due to sus-

pected corrosion in the swagged terminals, I tried something else.

1 disassembled and thoroughly cleaned with light abrasive, all of the cable connections, including the starter terminal, the two starter solenoid terminals, the master solenoid terminals, the battery cable ground, and the battery terminals themselves.

Would you believe, this did the trick? It cranks just like new. Let's hope this may help some other loyal but frustrated Cherokee owners.

Bad Fuel Gauge

By Arthur E. Frank

On the way back from Oshkosh, the right-hand fuel indicator stopped working. I have checked all the wires to the gauge and they are all right. It must be the gauge itself.

The local dealer told me I could buy the gauge for $40.00 as a single **unit,** but it looks to me, like the gauge is in a cluster. Must you replace the whole cluster or just remove the cluster and replace the bad gauge? Can the bad gauge be rebuilt?

The answer:

The fuel gauge is a separate instrument which is mounted in the cluster. Once the cluster is removed the gauge can be separated from the cluster and replaced. A good instrument re-builder could, no doubt, rebuild the gauge, but the cost would probably be about the same as a new one, so replacement would be the wise choice.

Has A Source For Gear Re-chroming

by Larry A. Dietz

I located a company in Los Angeles that did an excellent job re-chroming the axle assemblies for my 180D. They measured the extreme upper end of the main shaft to determine the proper dimension to machine the shaft to after the re-chrome plating.

The upper end of the shaft can be used because it gives no wear when the shafts are assembled into the gear casting.

The cost for this service was $125.00 per assembly which is quite reasonable because used assemblies run $225.00, if you can get assemblies in good usable condition, and new assemblies cost $450.00 each.

The original chrome/nickel plating is removed before the shafts are re-plated. As a result the newly reconditioned assemblies will out last the rest of the plane.

The name of the company specializing in Hard Chroming is: **Chromal Plating Co.,** 1748 Workman Street, Los Angeles, CA 90031 213-225-6121.

They also do re-chroming of large aircraft landing gear assemblies so you can see that they are qualified in their field. I hope this is of help to those members whose landing gears corroded and pitted like mine did.

Leaks Through Wings

by Stephen Goldfarb

I have been plagued by leaks for years, but I had never considered that the leaks might be in the wings.

Sure enough, I found openings in the seams between wing panels in a number of places. These were caulked with GE silicon caulking material. Though this was not the complete cure, the leakage was very measurably decreased.

I inspected my airplane, a 1964 Cherokee 180, during the rain. I noticed drops of water entering through the normal openings in the tail area. Some drops were coming from the vertical stabilizer.

The water than mckles down the fuselage and accumulates behind the bulkhead, generally on the left side of the aircraft. I believe this also seeps under the seats and wets the carpeted area in the rear seat compartment.

Can Overhaul Airborne Air Pumps

A bit of update on the dry air pump, as used on the Piper Cherokee (model 211CC for all), we would like to pass on the following information:

We at Rapco, Inc., just recently got an FAA approved Repair Station (#C61-51) for overhauling Airborne dry air pumps.

We put in all new carbon pans, including the front end graphite bushing and a new carbon parts, including the front end. Price (CPA special of $171.75 exchange) will save the Cherokee operator $106.00 as compared to the Airborne list $278.00.

The nice thing about getting this pump overhauled is that you can send it in before it fails on the airplane. Airborne would like you to throw the old pump away and purchase a new one, but this really is not a throw away item, especially at $278.00.

Michael White
Rapco, Inc.
743 Old Tower Road
Oconomowoc, WI 53066

Cherokee 6 Prop Problem

By Dan Caliendo

I might give others the benefit of a recent experience 1 have had with my PA-32-300. I had my prop overhauled during my current annual thanks to the AD on Hartzell props that requires tear down and overhaul every 4 years or 1500 hours.

Mine was because of the four-yeardeadline. In spite of keeping the plane in a hangar and haviog annuals done. by the FBO with good reputation, they found water and corrosion inside the hub.

Luckily it was not extensive enough to require expensive parts and/or overhaul. The mechanic thinks the reason was that they failed to grease the hub during previous annuals.

Apparently grease should be inserted into the lower zerk until it oozes out of the top zerk so as to assure a hub full of grease. Others with similar props might make sure this is done each annual.

How To Clean Up Caulk

By Jim McCord

I especially enjoyed the reprint on leaky Cherokees in the February issue. Mr. Howard suggests the use of gasoline to clean the G.E. auto and glass seal. The most obvious reason for not using gasoline is, of course, that it is a fire hazard and it is toxic.

Recently, after a tile man repaired a number of tiles in my shower at home with silicone caulk, I questioned him as to how he did such a beautiful job without a trace of the messy stuff anywhere. The answer was "anhydrous isopropyl alcohol", the type purchased at almost any paint store.

It is not toxic (unless taken internally), has minimal odor, and cleans the silicone very well.

Reports On Performance Mods

By George Dostal

I have had the opportunity during the last 10 months to modify my Cherokee Arrow #N3708T (PA-28R-180) with both Hoerner Wing Tips (Met-Co-Aire) and gap seals (Knots-2-U).

Prior to each modification a flight test was accomplished, the intent being to compare cruise speed of the

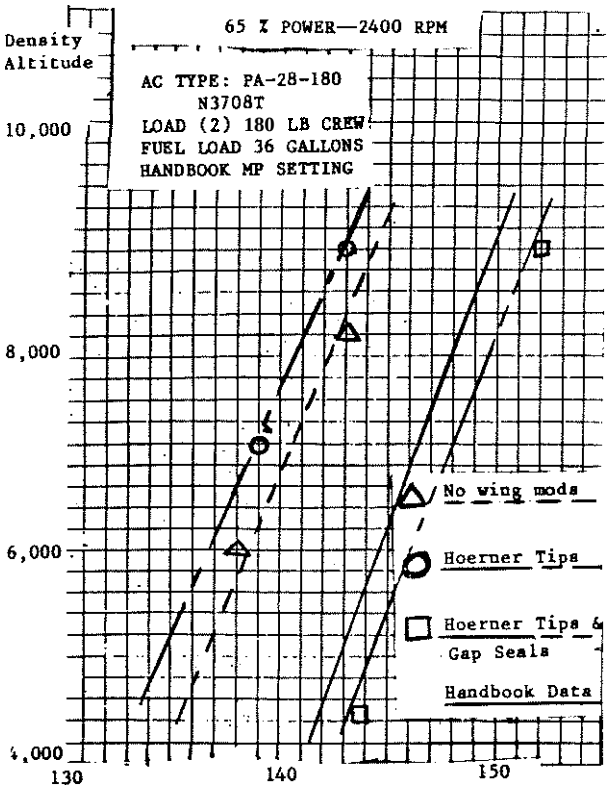

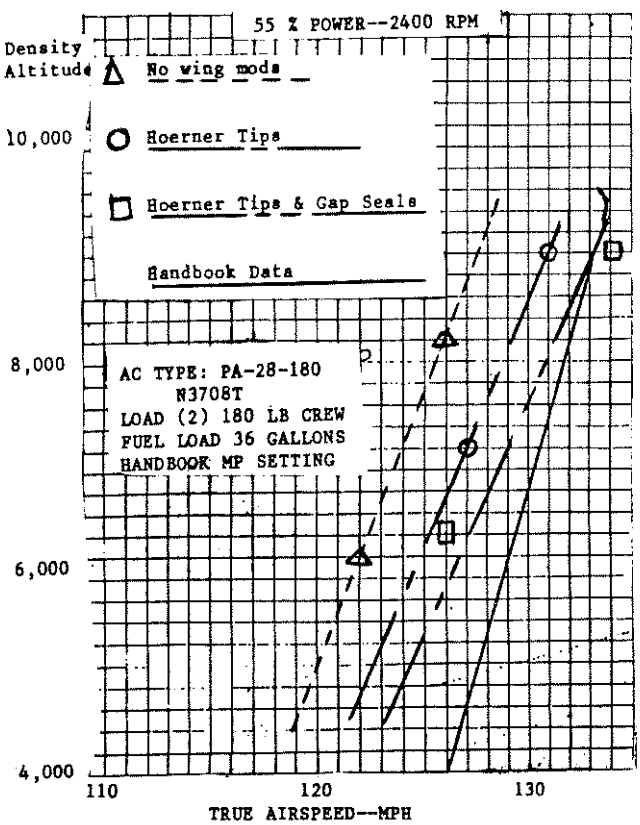

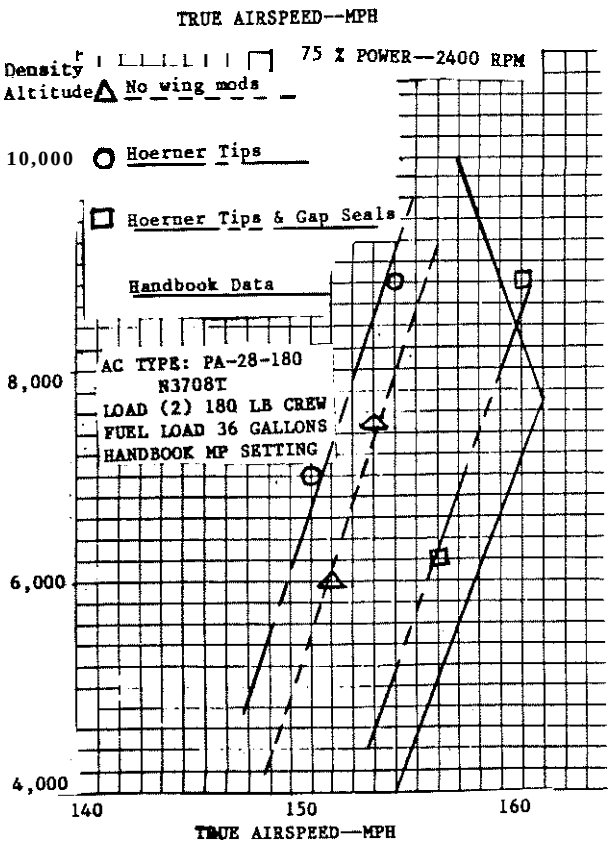

uinnodified and modified aircraft. Two pressure altitudes were selected 5,500 and 7,500 feet. Three power setting, 55%, 65%, and 75% at 2,400 rpm were flown at each altitude, the measure of power determined from handbook manifold pressure settings.

The unmodified aircraft was test flown first. This was accomplished with a qualified test pilot at the controls with me along to record data as he called it out. Fortunately finding a qualified test pilot is not a problem at Rosamond, California, next door to Edwards Air Force Base.

The succeeding conditions were flown by me with my son as adatarecorder, who fortunately weighed in within a couple of pounds of the test pilot.

The three plots enclosed will probably generate a bit of conversation in the Cherokee community. It is interesting that the tips alone seem to reduce speed attainable at 65% and 75% power below the observed without the Modification. The results with the gap seals were expected but not to the degree that this simple test indicated.

Warning On Gear Indicator

By Michael F. Walsh

I would like to add another related thought on the PA-32R landing gear that may save someone else a few anxious moments.

If the dimmer switch assembly for tlie panel and nav lights is removed from the panel, the gear down lighting circuit is bypassed and becomes inoperable, leaving the pilot with no positive indication of gear down and locked.

I recently had this experience thinking (as did my mechanic) that the switch assembly could be removed for leisurely service while the aircraft continued in service for day VFR.

Be advised that a sharp pilot would have noticed the three greens not illuminated while taxiing; I did not.

This could have become one of those incidents where one small problem couldliave potentially grown and snowballed into something else had conditions been less than ideal.

Cherokee Six Cabin Door Fixed

By Don Taylor

Regarding the problem of poor door latching, we found the pin for the door latch mechanism was bent so badly that it was inipossible to get the door closed tightly aud latched. Installing a new pin corrected the problem.

Also, happy to report that we have had no retractable nose-gear problems with our Six!

Maintenance tips

by John Sisca

John Nielson said his oil cooler hose failed (October Newsletter) aid he replaced them with new hoses. I had a related problem in June 1982. I had noticed that the flame-resistant shield was very soft, like tar, on the lower oil cooler hose.

I spoke to Product Support in Vero Beacli arid they said if any of the rubber engine hoses have over 1,000 hours on them, to check their flexibility.

Try to move the hose back and forth a little. If the hose is very stiff, hard to move, aid crackles and pops, then you may be due to replace that hose.

I purchased the lower hose from a Piper dealer but the upper hose was impossible to get due to production cut backs.

Then I found out that Aviall in Van Nuys. California (213) 994-3423 could rebuild the hose for less than half the cost of a new hose.

Aviall reuses the end fittings, replaces the old hose and flame sleeving, and pressure tests the "new" hose. There are several places around the country that are certified to rework aircraft hoses, and this is one way to save on maintenance.

Another way to save on maintenance is to get involved through owner-assist annuals and supervised maintenance. For those people in the Los Angeles area interested in owner-assist annuals and maintenance, I would recommend Bask Aviation at El Monte Airport (213) 443-6474. Mike Passwater is the service manager.

Now for a helpful tip. It has to do with tire inflation.

The way I solved the hide-and-go-seek method of finding the tire air valve hidden in the wheel fairing was very simple.

Go to your local auto supply, buy a white "crayon" used for tire lettering. Find the air valve on the tire and then make a white line from the rim to the ground on the backside of the tire (the side facing the brake disk).

Make this mark in line with the valve, this way when you're pushing your plane around looking for the valve, all you need to do is look for the white line on tlie back of the tire. I put the mark on the nose wheel tire on the same side as the valve.

Fuel-Flow Meter, Speed Kit Comments

By J McCord

Yes, someone has successfully STC'd a fuel-flow meter for carbureted engine aircraft: Silver Instruments, Inc., 2346 Stanwell Drive, Concord, CA 94520. The instrument is called Fuel Guard and is a totalizer plus a fuel-flow meter and uses a flow scan model 201B transducer.

Silver has STC's for at least 20 to 30 aircraft, one of which is the Cherokee 6 (not a carbureted engine) but some of those STC's are carbureted engines and there are approximately 16 more STC's now awaiting approval at one of the California GADO's.

The Archer II STC is one of those. I personally am making an application at our local GADO for use of the Fueltron on my 181 through Form 337.

The FAA is supposed to examine the proposed installation today and give his judgement. I hope it works out.

I have just had our mechanic put a Knots-2-U kit on the 181 and preliminary flying seems to indicate increased speed and climb with definite slower flight available with full aileron control down below 55 knots. So far I am very impressed.

Arrow Gear Solution

By Jack Daub

Reference Mr. Gaylor's letter in the March issue concerning the Arrow's "gear-in-transit" light illuminating in flight.

That is not, as his CFI stated, "aproblem with the Arrows", but rather a nose-door rigging problem and it is easily adjusted.

I am amazed at the old wives tales that many "experts" spread, i.e., pulling hack and forth on the yoke "sharply" to cure the problem.

Try this simple solution: raise the nose or reduce power to slow below gear speed. Lower the gear. After a gear down indication is indicatedretract the gear The door will reposition itself completely and the transit light will remain off.

Recommends Voltmeter For Panel

By John Sisca

How healthy is your electrical system?

Most Pipers are only equipped with a load meter (AMPERES gauge) which basically tells the pilot the total amount of amps being demanded of the electrical system.

If the "ALT AMPERES' gauge were to indicate "0" amps, then you know there is a problem with the alternator and that the battery is supplying the electrical power.

If the "ALT AMP" gauge indicates a load then you may assume the system is operating correctly. You may be very wrong!

There are three diodes inside the alternator that convert the alternating current (AC) to direct current (DC). If one or two diodes become defective then the alternator will not be putting out it's full rated voltage of 13.75 volts.

Since the alternator output would be diminished but the load on the system is the same, there is a very good chance that the battery would be supplying some of the voltage.

What is actually happening is that your battery is being drained while your "ALT A M P gauge shows only a slight drop in the load reading, in most cases this change will go undetected.

A way to avoid this and to get a better picture of your electrical system is to install a volt meter. I have a Westach "2-1/4" volt meter with a 6-16 volt scale on it. Westach is by far the least expensive at approximately $33.00. There are a couple of other instruments on the market that indicate voltage and can go into the $200.00 price range.

All of the six instrument shops that I spoke to agree on one thing about the Westach gauge. Do not expect a long life on an economically-priced gauge if you do a couple of hundred hours of flying each year.

When the master switch is turned on the volt meter should show 12 volts. If it indicates less, then your battery may be due for a charge and a water level check.

With the engine started the meter should show 13.75 volts, though 13.25 is an acceptable lower limit. Therefore a reading of 13-14 volts would indicate a properly functioning alternator.

A reading of 12-13 volts and "ALT AMPERES' gauge showing a load could indicate a failing alternator and an excellent possibility that your battery is being drained by trying to carry some of the load. Try to reduce that load by turning off all nonessential electrical items.

If the volt meter is indicating less than 12 volts, then the "ALT AMP" gauge should be at "0" and the voltage reading will decrease as the health of your battery diminishes. The volt meter should be an important addition to any instrument panel since it helps show you a complete picture of your electrical system.

Lubricate Your Starter

By Franklyn N. Brown

My 1973 Cruiser suffered from what I'll call "The Hard Cranking Syndrome".

I once suggested weak battery and evaluated the possibility of new battery leads as suggested in prior CPA newsletters.

However, my mechanic diagnosed it as *dry* starter bearing and Bendix. He took the starter and Bendix gear and lubricated the bearing and shafts and it immediately improved cranking speed 100 percent.

For those unfamiliar, the starter and Bendix are right behind the spinner at the 5 o'clock position and get a lot of air flow and it tends to *dry* the lubrication off.

If my experience is correct, I bet that 50 percent or more of hard starting problems are the result of *dry* lubrication on the starter gear and are not battery related.

I previously went through a battery every two years and was ready to get a new one. My bud now turns over like a spinning top on the same battery I thought was gone.

Heated Pitot Comments

By James E. Ellis

A few comments on letters concerning heated pitot installation:

1. The heated-pitot installation is straightforward, butlabor-intensive (andtherefore expensive.) Electricalwires must he routed through the wing, then past the (removed) left interior sidewall panel, to a switch and added circuit breaker.

2. The heated pitot has a significant current draw and if the 160 has a stock alternator it probably will not be able to handle a full load of radios and the heated pitot, particularly at night. I also updated to a 60A alternator which today probably would cost somewhere around $350 to $400.

3. If the plane is to be used IFR, a new static-altimeter check will be required. Mr. Ekse might also he advised to add an alternate static source at this point, under his panel, as it wouldn't add much more expense to the overall job.

Fuel Gauge Replacement

By John A. Sisca

Arthur Frank recently had a question about replacing his fuel gauge.

Wag-Aero at P O Box 181, Lyons, Wisconsin, 53148 sells Piper fuel and engine instrument gauges, either in the cluster or individually.

It is definitely worth while to contact them (also get their catalog) since the gauge cost savings can be 25-50% off.

The catalog has photos of each type gauge so you will be sure to get exactly what you want; but to be on the safe side, tell them the limits (quantity, pressure, temp, etc.) that are on the gauge you want to replace.

As you said, each gauge is individual and they are separated by a round slotted rubber insert on each side. If you are careful, the gauge can be swapped out without removing the cluster. The tricky part is getting the rubber insert back into place.

You must slip the insert in place at the same time as you are trying to put the gauge back into the cluster while being very careful not to touch any of the instrument needles; they bend much too easily.

When you are tightening the first nuts on the two terminals that hold the gauge in place, be very careful not to over tighten them. Finger tight plus 1/4 turn is enough. The terminal can easily break away inside the gauge if it's over tightened.

Do not rule out the possibility that there may be a problem with the fuel quantity transmitter or any part of the wiring from the transmitter (at the fuel tank) to the fuel gauge

The fuel transmitter, in each wing, has one wire coming from it and going down to a terminal strip under the rear seat on the pilot side (on the Warrior they connect to terminal 9 & 10). From there a wire goes to each fuel gauge, Another possibility is that the ground strap at the fuel quantity transmitter has come loose.

One thing you may want to try is to disconnect the wires from the left and right fuel gauges and connect the right gauge wires to the left gauge, check for a reading when the master switch is turned on.

If you get a reading, then it is not a defective fuel gauge. Each wire that goes to each gauge terminal has a unique letter/number code to identify it, BE SURE that those wires go to the terminals that they came off of.

The fuel gauges are simple and usually reliable, they have two coils that basically create an electro-magnetic field that moves the needle; if the gauge breaks, in most cases you just throw it away.

Steering Wheel Failure on Takeoff

By Maurice Brown

Concerning our 1973 PA-28-140, today on takeoff the left steering wheel came loose, cracked. I was able to make a short trip, but on landing the wheel came completely off. I grabbed the right one plus what was left of the left one and made a decent landing. I thought this might he of some interest.

Now will you advise me where and how to get a used or new one. I need two as the opposite one is cracked. There is 16,000 + hours TTA&E.

I also need a new owners manual and duplicate flight manual with weight-and-balance. These items were stolen.

The answer was as follows:

"Cracked control wheels are an old Cherokee problem. They were the subject of two AD's on earlier models, but this is the first time I have heard of a failure in many years.

You might check around with FBO's in your area for information about salvaged Cherokees. Otherwise, you will have to turn to Piper for replacements. The same is true of the flight manual. And this is a costly solution, I know, but it is illegal to fly the plane without the flight manual aboard.

For an owners manual, I suggest you write to ESSCO, 426 W. Turkey Foot Lake Road, Akron, OH 44319. (216) 644-7724.

Incidentally, for anyone whose plane is used by others or where you have reason to feel that these important manuals might be stolen, why not take the time to copy the originals and staple the copies together to be kept in the plane. This could save a lot of expense and irritation later.

Constant Speed Prop Request

A member asked about a constant-speed propeller conversion for his plane. The answer:

I know of no bolt-on conversion for your present engine. A number of Cherokees have received the Avcon conversion, however, at a cost of about $13,500. At that price this is not a spur of the moment thing, but may make sense to someone who has a run-out engine.

The conversion kit includes a Lycoming 0-360-A-I-A engine.

I talked to one member who made the conversion on his 1968 140. His engine had run more than 3,000 hours since overhaul and a new engine was in order. One reason for the conversion was his concern over the unavailability

of 80 octane fuel for his old engine.

He purchased the Avcon kit and installed it himself. He said installation was simple. Unbolt the old engine and bolt in the new one. The rest is just detail work, and everything comes complete in the kit. It tookhim two weeks of labor working by himself, hut he points out his is not a mechanic and a good shop cut the time in half.

He said top speed increase is not significant: his plane went from 136 mph to 142 mph. But he could not praise the conversion enough.

The service ceiling was raised from 12,500 feet to 14,500 feet. Takeoffroll was decreased by 25 percent.

Climb was much stronger and he described the converted plane as an excellent mountain plane.

One other comment. This member is an engineer and he keeps excellent records. He also showed a 6 mph increase in top speed due to installation of Met-Co-Aire wing tips (measured before and after with a second plane as chaser.)

Wood Screw Shorts Landing Gear

Richard C. Robbins, of Los Angeles, CA, reports that his plane suffered loss of landing gear and warning circuit when a wood screw extended 1/4 inch below the rear of the back seat plywood floor.

The Arrow 201T suffered the problem after heavy rear seat passengers (350 pounds) depressed the floor board causing the wood screw to pierce the wire bundle located on top of the rear seat belt support bracket.

It is recommended that the floor board be examined on other Arrows for protruding wood screws in the area of the wire bundle.

Simple Solution To Poor Starting

by Herb Levin

In regards to starting, my Cherokee, a PA-28-151 had this malady. By replacing the outer bushing in the starter the disease was cured. I haven't replaced the battery cables yet, and so far it starts right up.

Intercooler For Turbo Arrow

An induction intercooler modification for the Turbo Arrow has been certified and is now available for $4,995 from Turboplus, Inc., 1437 W. Valley Highway, Auburn, WA 98002.

The mod consists of a modified induction system, a turbocharger intercooler, cowl flaps and pressurized magnetos.

The Turbo Arrow has no cowl flaps and is prone to overheating during climb. Turboplus claims its cowl flaps lower cylinder-head temperatures by 20 to 36 degrees. Piper offers retrofit cooling louvers which can help, but which cannot be closed during descent, increasing the risk of thermal shock damage to the engine.

Turboplus states that the critical altitude with the mod is increased from 11,000 to 15,000 feet and that lower temperatures permit more leaning during climb and cruise, resulting in fuel savings.

The TSIO-360 Continental engine has had a high rate of heat related failures and this new mod, although not cheap, shows potential for solving some of these problems.

Has Data On Toe-Brake Conversion

By Donald A. Sankey

My son and I both own Cherokees. Mine is a 1971 ex-Flite Liner. I say "ex" because I have completely redone it and it has more equipment than most Cherokees. I am also an A&P mechanic.

A recent inquiry about toe-brake conversions could he answered by the Cherokee Parts Manual and Service Manuals.

I have installed many of these kits on my Cherokee so I know they are available.

For the benefit of other members, the following kits are listed in the manuals.

Wheel Fairing installation for 150 and 160--P/N 754 497 and 754 498.

Wheel Fairing installation for 140, 150 and 160 (S/N 28-1530 up)--P/N 756 790.

Auxiliary Power Receptacle, 140--P/N 756 955.

Step Installation, P/N 756 785.

Single Toe-brake Installation, P/N 756 897.

Single to Dual Toe-brake Installation, P/N 756 898.

Dual toe-brake Installation, P/N 756-899.

Solved Starter Problem

By Sakari Hiltunen

I had a 1976 Warrior with about 2,000 hours on the engine when I bought it four years ago. I never had anything done to the engine, other than regular maintenance.

It always started with a touch of the switch, until it started failing.

Two years ago when we were doing the annual (I was helping), I mentioned the hard starting and I told the mechanic about our members experiences regarding the cables.

He said he had replaced cables before but it had not helped and that the only thing which would help was to replace the starter with a geared one ($400).

Some half year later I decided to do something after I bought a new battery without much improvement. I replaced the cable from the firewall to the starter and the short cable from the battery to the first solenoid. That did the trick.

So much so that I could put the old battery back and it still starts with a touch of the switch.

Now I am wondering how much mechanics how.

Costs Do Not Have To Get You Down

By Robert M. Winjum

The cost of keeping a bird in the air is sometimes something that really hurts the pocketbook when it shouldn't have to. A couple recent cases in point.

The inside handle on my 69 Arrow broke. The cost of a new one would have been $12.

After looking at the handle, the name "Ford was seen. A trip to the Ford garage yielded a new one for 85 cents (the same one used on a Model A).

Now, here's a bigger problem. After replacing two motors on my auxiliary fuel pump (cost, $200 each), when the third motor didn't work, I took it to our local electrical shop and they put in anew bearing which cost $16.

It bothered me that all these motors froze up. Upon inspection of the drain below the pump, gas came out when the pump was turned on.

This meant that gas was leaking from the pump shaft to the sealed bearing on the motor and even a sealed bearing would have the lubricant washed out after gas had sprayed on it for long enough time and then the bearing would freeze.

Now listen to this: you can buy a new motor, but if you just want a fuel pump you cannot buy it alone, so you have to buy both the pump and motor for a cost of $493

Now in my case, I have fixed the motor and so I thought, why not fix the pump? After all, it pumps the gas, but leaks.

To fix this, all you need is a seal around the shaft--cost, $4.50. This is simple to change.

All in all, to end the story, I thought it was going to cost me $493, but when all the smoke cleared it cost me $20.50 plus tax.

Get Control Wheel Used

By M. Brown

When the Piper dealer quoted $138 for a control wheel, 1 went to an FBO and secured a used one from Ellington Aircraft, 30982 E. Broadway, Walbridge, OH (419) 666-2440.

1 am in a stew about the flight manual. I had the manual at home with me and at time practiced on weight-and-balance as one should.

Then, when I had the van in the paint shop to be painted I left the van open. Of course, the paint shop pleaded innocent.

Engine Failure Forces Landing

By Inky Mark

My PA-28-140 with its extended wings had a forced landing in a very rough field due to an oil line break and consequently an engine failure.

Even though all this occurred below 500 feet, the Cherokee performed magnificently, even without power. When flown properly I would say this bird is one of the safest and toughest around.

The Cherokee is heavy and can he put down very accurately without power. As I indicated, I put it down in a very rough cultivated stubble field. I kept it from wheel-harrowing by using full flaps and keeping the nose extremely high on touclidown. There was absolutely no physical damage to the airframe.

Now 1 will have to look for another engine.

Found Source For Inside Door Handle

By Roger Moberg

Just a quick note to let you know 1 found an unusual source for the inside door handle on my 1968 Cherokee 180-D.

As I got a little rambunctious in closing the door, the pot metal part decided to divide in two. Piper wanted $40 for a new one.

Salvage outfits needed about $10 plus shipping. A salvage operator in Omaha was nice enough to tell me it was a genuine Ford Motor Co. part and that I could probably get it from them cheaper.

I tried junk yards first. No luck. No one keeps cars that old.

Then, my friendly Ford dealer's parts man saw it and, without looking it up, identified it as a circa 1967 Ford. I ordered one and suggest you might want to record the number: B7C-8122600B. Price list: $7.70!!

Be aware, however, that there are three different handles used in 1968. This is the cast one for a splined shaft.

Wants To Add Toe Brakes

In the December issue, you mentioned a toe-brake conversion. I own a 1965 Cherokee 180, serial number 28-2556.

The aircraft was purchased approximately two years ago and my wife and I have flown it almost every weekend since purchase. My chief concern in this letter is to investigate the possibility of converting the hand-brake to dual toe-brakes.

Please send me information so that I may evaluate the feasibility of installing the toe-brake conversion.

G.D. Nellans
Alexandria, VA 22301

We have received a lot of mail about this, so here is the information.

Piper offers two toe-brake conversion kits, 756-898, which adds the second toe-brake to the passenger side when the plane already has toe-brakes on the pilot's side.

The second kit, 756-899, provides toe-brakes for both sides where the plane is originally equipped only with a hand-brake.

Both kits fit the same models and serial number:

140 series aircraft with serial numbers of 20521 and up; 150, 160 and 180 aircraft with serial numbers of 1761 and up; and 235 (including Arrow) aircraft with serial numbers 10487 and up.

Finally, we get to price. The 756-898 kit presently lists for $435 (1984). The 756-899 kit (which will be the one most people are interested in) lists for $1,015. They are not cheap, but then again they are not as expensive as many other aviation items are.

Cost of installation is another matter. Check with your A&P. Most of the actual labor, however, can be performedby one who is not overly skilled. Perhaps your A&P will permit you to do much of the work under his supervision.

Wants To Convert 140 To Four-Place

We own a Cherokee 140 rated as a two-seater. It is certified as 1,950 pounds gross.

We want to change it to 2,150 pounds and a four-seater. Please supply us with any information you can regarding conversion.

If there is anyone out here on the West Coast that could do this conversion, we would like to know.

Walter Gibbs
Lakewood, CA 90713

Dear Walter,

You are probably in luck, depending on the serial number of your plane.

The difference between a 1,950 gross and a 2,150 gross plane is mainly the propeller. The lower gross models (before 1966) had what has been described as a "climb prop. Actually, it is not a climb prop, but exactly the opposite, an overdrive prop, if you will.

To convert to the higher gross, the prop needs to be re-pitched to 58 inches. Some hardware is also required to make the change.

Your A&P mechanic can do the modification for you. Any prop shop can re-pitch the prop for you.

The procedure is described in Service Spares Publication #230, available from Piper, which also lists the applicable serial numbers. The kit for making the conversion is also available.

As to seats, Piper no longer makes them. However, they are available at aircraft salvage yards throughout the country. The best place to start is Trade a Plane, Crossville, Tennessee 38555.

You probably will not be able to find a matching set, but this is not important. Even the condition is not. You can settle for just the frames. Don Stretch, at Airtex, can provide covers for anything you find.

The seats themselves just bolt in place.

Owns Horton STOL Model Cherokee

By Don & Myrna Champlin

We are the proud owner of a 1972 PA-28-140 Cruiser which we acquired a year ago.

A prior owner had installed a Horton STOL kit on her and she performs real well in and out of our farm ship. I have not recorded any performance figures, but I do solo fly her with full flaps at 40 mph IAS using around 2,500 rpm to maintain level flight (the stall warning light is usually on at this point.)

The Horton kit does not seem to hurt speed at the top, either. I plan on some accurate tests and would be glad to send you the results if you are interested.

Comments On Avionics and Winterization

By Vince Trupiano

I purchased a 1965 Cherokee 180C about two-and-one-half years ago. The airplane had a pretty paint scheme which was about four-years-old and it was set up for IFR.

What I did not know was that this beautiful plane was going to cost me a fortune to bring it up to par. The previous owners had taken very many short cuts in maintenance that were undetected.

Fuel tanks started leaking, the battery needed replacement, avionics started failing and the wiring was non-standard. Believe me, I could write a book and tell you things that would make your blood curdle.

Last year I had some major avionics replacements and added a DME and I have plans for an autopilot and weather radar. I receive more compliments on my pretty Cherokee than I can handle. It was like nursing a stray, sick dog back to health and today I could not part with her for the world.

Regarding John Steeby's winterizationkit problem, I had the same problem. I finally placed a triple thickness of furnace duct tape over the intake of my oil cooler hose leaving an opening about one inch square in the center for outside air to enter.

There are four sheet-metal screws which fasten the intake hose that I use to secure the tape to prevent it from breaking loose and possibly entering the oil cooler hose.

The result is normal oil temperature and pressure, even in zero-degree weather. When spring rolls around I remove the tape and discard it, and use fresh tape the following winter.

The tape will not adhere to a cold surface so make sure the area is warm before applying the tape. However, once the tape is in place, the cold temperature or heat from the engine does not affect it.

Electric Trim Cure

By Pete & Jan Coleman

In reply to Don Batterton's electric him problem, I solved mine by removing all the old heavy grease on the trim jack screws located under the fiberglass tail cone and replacing it with MIL spec C-21567 soft film silicone grease.

End of cold weather problem.

Electric trim runs about one fourth as fast as manual

trim. There is a tension spring on top of the electric trim motor. Remove tension on the cable and operate the electric trim. If it runs OK, the trouble is probably heavy grease (if manual trim is not too stiff).

I also found the trim cable frayed around the electric trim pulleys and had that replaced.

I just got through soundproofing the cabin including replacing headliner with imitation wool. It seems quieter. Will report again after we run a comparison on before and after decibel readings.

One method of starting these Lycomings that I have not seen mentioned is the way we always started our 150 Hp Tri Pacer.

Hit the starter and when the engine comes up against compression let up and let it bounce back, catching it on the rebound. It never caused any starter problems and worked every time once you got the knack of it.

Two Items For Cherokees

By Ted Stanley

You might want to pass along to the membership information about the availability of an engine-breather tube winterization kit (for the 181 and, I assume, other PA-28's as well.)

This seems to be somewhat an obscure item. I have only found reference to it in two places: under section 8, Handling, Service & Maintenance, Cold Weather Operation, of the Pilot's Operating Handbook, and in the maintenance manual under GAMA Chapter 12, Servicing, Winterization Plate.

This latter reference is the only source of a part number. It is not listed in the part catalog.

Another item of interest is the "Wing Ding". It is a neat little device that mounts on the wing using existing screws. It serves as an additional door stop, thus preventing the door from being caught by the wind, breaking the factory door stop, and smashing into the cowling.

This item is manufactured by William Stephenson whose phone number is (305) 567-2200.

Drooped Tips On a 180

By Wayman C. Dunlap

We put on STOL droop tips and they have honestly lowered the stall speed by a good seven miles an hour. The only problem is that we had to abandon ow plans to install the new S-Tec 40 autopilot as the factory confirmed that their autopilot is not STC'd for airplanes with aftermarket wing tips.

After several months with our new plane we have reacheda conclusion: the 180 is one of the great used planes of the world if you can find a good one at a good price,

Ours starts first tirne, every time, hot or cold, and refuses to use oil.

Recommends Baffle For Cold Weather Flying

By Fred Pollow

I co-own a PA-28-235C with a friend and live in Milwaukee, Wisconsin, which means I fly in a lot of cold weather. The oil temperature and pressure problem is common with a high-pressure cowl aircraft like a PA-28-235C.

You cannot restrict air flow into or exiting the cowl or severe cooling problems could result. I do not know of an approved kit for this aircraft, but I did make a baffle for the oil cooler which made a definite difference in operating temperature and oil pressure.

At -30 degrees F, oil temperatures are in the normal operating range. If anyone is interested I would be glad to send a print of the baffle I made.

One must be careful when outside air temperature gets up around +30 degrees F. The baffle is simple to install or remove and takes about five minutes to do so.

Also, when you have low ambient temperature, you have high oil pressure whereas when oil is running at more than normal operating temperature a loss of oil pressure occurs, with the exception of air entrained oil, as you explained.

I am sure some people would not agree, but one can check with most oil companies and they will confirm this to be a fact.

Gas Smell In Cabin From Primer

By Jerry Dunning

Recently I solved a raw gas smell in the cabin that had been annoying me for a year. It was caused by a loose fitting where the copper gas tube connects to the primer

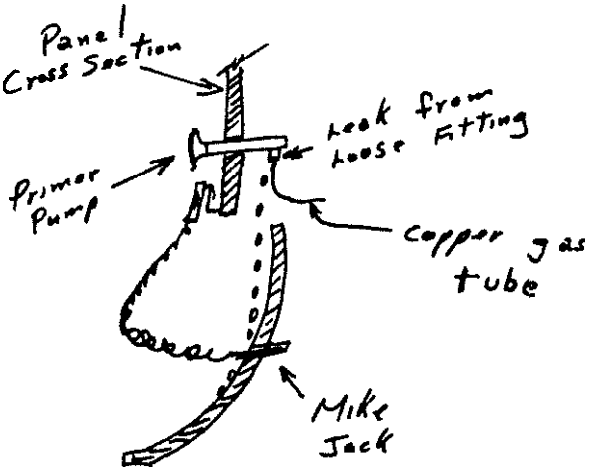

pump on the inside of the panel.

The local FBO mechanics could not find the leak three times. After landing on one occasion, I noticed where gas had dripped on the center panel where my mike plugs in. That is when I realized where the gas was coming from.

In past letters others have mentioned a gas smell thinking it was coming from the tank switch. They possibly have the primer problem also.

Slow Plane May Have Indicator Problem

By Joan Schneier

This is directed to Mr. James and other members with "slow" Cherokees.

My 1966 140 used to register 20 knots slow, which was finally pinned down to an airspeed indicator problem. The plane constantly acted too fast on takeoff andapproach and stalled slower than book values.

The solution was simple and cheap. The pitot static lines are metal behind the gas tank, but with rubber on both ·ends.

Over time in a hot climate, the rubber deteriorated inside the cockpit. I replaced them with 5/32 inch neoprene hose (available at any auto parts store for about 80 cents a foot.)

To do this you have to take down the left wall panel plus the gas switch knob (be sure to replace it correctly).

Also, only replace one line at a time, longest ones first, and do not forget all the little connections between the pitot-static instruments.

About 10 feet will cover everything in the cockpit and out by the pitot tube.

Be careful; the metal instrument intakes bend easily. IFR planes will need a new pitot-static check.

If hoses do not help it is probably time for a new indicator (unless the plane actually is slow.)

Has Faded Glareshield

A common Cherokee problem is fabric fading on top of the dash between the glare shield aid the windshield.

Do you or aly of the CPA members have a method of restoring the fabric to its original color?

Clarke R. Mahaffey
820 Brookmere Dr.
Edmonds. WA 98020

Most Cherokee models use a fabric trim and it can be restored by using a spray fabric dye. Several brands are available. Republic Aerosol Company makes a 13 oz. can which sells for about $2.00, and is available in a variety of colors.

Ask for it at your local paint store or write to Republic Aerosol Company, Compton, CA 90224.

Be careful of the over spray and be sure to carefully mask any adjacent areas which you do not want to dye.

Some Cherokee models use vinyl for this trim. This material cannot be dyed and must be replaced (a difficult job at best.)

Geared Starter Speeds Starting

By Howard Moore

I own a 1973 Cherokee 140 and would like to pass on my solution to hard starting.

I too had become frustrated, angered and sometimes embarrassed at the partial cranking of the engine. Cranking was not continuous, so I could not call it "slow cranking". At best I could rock it and gat one half turn at a time.

I called Piper customer service and to my surprise they acted naive that such a problem existed. They offered no real solution other than to check for frayed wires or loose connections.

Our FBO mechanic suggested replacing the aluminum cables with copper. This was done but only a slight improvement was noticed.

He then replaced the direct drive starter with a used, gear starter (plus a new ring gear) and the problem is solved. The engine really spins and start up is fun again.

One other item. Recently one of the two anchor bolts that holds the alternator support bracket to the bottom of the engine case sheared off. The alternator twisted to where the "hot" post contacted a tubing cowling brace and the arc burned it halfway through. Annual inspection of these bolts might be warranted.

Wants To Use Extended Core Plugs

Recently, while at Oshkosh I purchased eight new spark plugs. They are the extended-core plugs, Champion REM-37-BY.

The extended-core was to eliminate fouling which I was getting. This has been eliminated with the new plugs.

I checked with the Champion Spark Plug people at Oshkosh before buying them and they told me they were designed for my engine, a 0-360-A4A (180 hp).

They seemed to be doing a good job but my mechanic, who does my annuals, says they are not an approved plug for my engine and I am not sure if he will reinstall them at my next annual.

Do you know if these plugs have been approved and if so where can I get some proof of the approval.

They seem to have eliminated most of the mag drop on runup and, given the expense and all, I sure do not want to throw them away. Can you help me on this?

Are any of our members using these plugs and have you heard of the results?

Ernie Colhert
Ontario, Canada K7S-3H2

The extended-core plugs were designed to eliminate or at least diminish the amount of fouling caused by operating an 80-octane engine on 100-octane fuel.

The plugs are designed for your engine and have been approved for use by Lycoming. You cannot blame your mechanic for not knowing this. I checked with the people at the factory at Vero Beach and they did not know whether the plugs are approved or not.

They are listed on the new Champion charts and catalogs and you can also get verification of their suitability from Avco-Lycoming.

Gasoline Tank Measuring Graph

By Charles Churchman

I developed the graph below by draining my fuel tank and measuring at each inch as it came up. it is a good

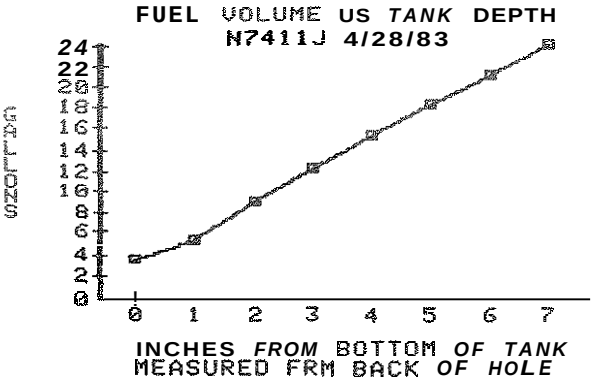

check on the fuel gauge. I thought you might like to use it.

Voltage regulator, Quick Drain, Interior

By Mike Grimes

Just a couple of short hints I recently ran across,

My alternator light would come on in flight and my ammeter indicated "0" for five seconds or so at random times. I found that a new voltage regulator solved this problem.

The problem was so random that it was impossible to get a mechanic to look at it.

Also, 1 suddenly found on one occasion one of my quick drains would not shut off completely and it would leak just enough to keep valve and wheel pants wet.

I anticipated having to replace the quick drain valve. However, I found that you can repair a leaking valve by removing it (remember to drain the tank!)

Push the valve sheath back and there is a quarter inch outside diameter rubber gasket. Slip it off and replace it with a new gasket. Reinstall the valve and you are back in business.

Recently. I installed an Airtex interior in my Warrior--I had no previous experience. I definitely recommend the Airtex. It Looks great and is very inexpensive.

As I said I had no experience, hut I was able to strip and install the interior in a total of about four days. Experience would shorten the time considerably.

Auto Fuel Legal In 140, Warrior

Autoinobile fuel, approved for high-wing aircraft for more than one year, is now approved by the FAA for Piper Cherokee 140 and Warrior models with the Lycoming 0-320 engine. An STC was awarded to Petersen Aviation of Minden, Nebraska which permits the use of leaded, unleaded, avgas or any combination of the three in these aircraft.

The STC costs 50 cents per aircraft horsepower, it includes placards and identification plates which must be installed on the aircraft at the fuel tank fillers as well as on the engine. Also included is information to permit an A&P mechanic with IA to make a logbook entry and fill out a form 337 (modification to aircraft form).

The auto fuel used must conform to ASTM specification D-439.

More information can be obtained from Peterson Aviation, Route I, Box 18, Minden, NE 68959.

Starling Cure

By Richard C. Eidt

I used to own a hard starting PA-28-140 whose start improved to normal when I learned from a wise mechanic at our field that the battery box is grounded by simple frame contact. If the contacts on the comers of the frame get dirty or painted, not enough current parses through the solenoid to turn the engine even if the voltmeter shows aperfect continuity test.

On this mechanic's suggestion I lifted the battery box carefully without disconnecting the hoses, arid cleaned box comers and the frame underneath them by using coarse sandpaper. Then I bolted the box down tightly.

I never had another problem. This is considerably less expensive than replacing the aluminum cable, although that may ultimately be necessary

Gear Switch Solves Arrow Problem

By Bob Leonard Jr.

I have a Turbo Arrow and have had a problem with intermittent gear lowering at altitude.

It is not just an indication: the gear is actually lowering. We adjusted the limit switches until we were blue in the face.

We finally discovered the actual situation and came Up with a permanent solution. The pump in tlie gear has a switch on it designed to trip at 1.400 pounds. The newer Arrows have an 1,800 pound limit on them.

When we switched pumps to the 1,800 pound pump, the problem was solved and has not recurred. The Piper factory helped with the solution and I cannot praise them enough for the aid they gave us.

I would suggest that anyone with a similar problem call the factory to talk to a service representative.

Grime on Yoke Causes Problem

Immediately after the second last annual inspection of my PA-28-180F, 1 was impressed with the smoothness of control yoke travel. 11 was like the proverbial baby's posterior.

As the time for another inspection drew closer; my preflight detected, instead, a very gradual loss of that smoothness, and then grabbing as the stabilator was moved from limit to limit.

On flight checking, after my most recent annual inspection, the final approach to landing really awakened me as I found it necessary, suddenly, to grasp the yoke handle quickly with both hands instead of the customary several fingers. I bounced in for a landing because the yoke was sticking during those last few seconds of flare and touchdown when a delicate touch is imperative.

Even though I take a lot of ribbing for wearing out my paint job by over polishing, a careful inspection revealed that the lubrication of the yoke a year ago had solidified along with a virtually invisible film of grime, creating the friction just when the most minute control inputs are necessary.

Polishing both yokes thoroughly, right up to the panel, plus a shot of silicone spray, have converted my bird from a two-fisted one to a two-fingered one.

Dancing Fuel & Temperature Needles

By Leon Tubb

I noticed some references in the past issues to "dancing" alternator needles which reminded me of my own fuel and oil temp gauge dancing problem.

Intermittently, either or both of the fuel gauges and the oil temp gauges would wander all over the face of the dials, frequently pegging on the top or at the red line.

After long digging and some tense moments waiting to get back on the ground with the oil supposedly at 260 degrees or so, I discovered that the previous owner or a mechanic had replaced the fuel gauges but neglected to place an insulating spacer between the mounting posts on the gauges and the box they are mounted in.

Result: an intermittent short when the vibrations of the running engine were just right. Luckily, I corrected the problem before learning about it the hard way--in flight with a leak from the adjacent fuel pressure gauge catching one of those little grounding arcs.

Fortunately I'm writing about this instead of how to handle in-flight fires.

Cruise vs Climb Prop

Ken Barnes, of Tulsa, Oklahoma, asked whether changing to a climb propeller would be a good idea. His answer...maybe:

The performance of a piston aircraft will vary dramatically when changes are made in propeller pitch.

The normal cruise prop was selected to give a good balance between climb ability and cruise performance. You can improve climb, but to do so you will have to give up some cruise performance.

The propeller on your plane is probably a Sensenich M74DM55 which denotes a 74 inch long propeller with a 55 degree pitch. A climb prop would be an M74DM53 which has the same overall length, but a flatter pitch. (A slow, powerful tugboat has a long, flat-pitched propeller, where a fast destroyer has a compact, deeply pitched set of screws.)

You do not need to change props to change pitch. Sensenich will change your prop pitch while you wait, at a nominal cost.

But the props are also different aerodynamically. The blade of the M74DM53 climb prop is broad and thick, while the blade of the M74DM55 is slim and slender.

Gas mileage with each prop is about the same in going from point A to point B, but with the climb prop it will take you longer to get there (but the engine will not be working as hard.)

And although top speed is somewhat reduced, the ground roll before take off is the same with both propellers. The difference in takeoff occurs only when the plane has a markedly greater climb rate.

So if you desire to cut down on the ground roll, a climb prop will not help and will cost you significant cruise performance as well. If, however, your problem is climbing over an obstacle after take off and you can afford to sacrifice some cruise speed, then the trade-off may be beneficial to you.

I flew for several years with a climb prop on a 140, but feel that any climb improvement did not outweigh the five or six knot decrease in cruise speed I encountered.

Interior Work, Leaky Planes

The Cherokee Pilots' Association Convention was a smashing success. Here is a review of some of the technical information from those sessions.

Don Stretch, of Airtex, reminded members that you can do interior work yourself with no requirement of a log book entry.

Soundproofing is important, but if you soundproof your Cherokee plan ahead. Install a 1/4 inch windshield rather than a 1/8 inch - it makes all the difference. The windshield is easy to replace - you need only remove the fairing on the bottom (it is screwed in place.)

And if you plan on replacing the cowl pad, removal of the windshield is almost a must. Defroster ducts are hard to work around. To remove them you have to drill out the bolts and reinstall them later with machine screws.

When choosing interiors, remember that cloth cuts noise more than vinyl. And use a high-density foam, glued to the aircraft skin, to cut noise, rather than fiberglass sheets.

Piper uses a lot of plastic in their interiors, but these, too, can he upholstered for a "custom look." Piper also uses a cardboard and Styrofoam laminate for interior walls, but this falls apart quickly. Make a new wall, but use a synthetic material so it holds together rather than falls apart.

Airtex cabin covers are made of canvas to permit them to breathe. Some covers, made with a synthetic finish, cause window crazing when the plasticizer in the fabric migrates to the plexiglass windows.

The Piper retrofit for shoulder harnesses is a good one and your Piper dealer should have information. It takes about eight hours to install.

Piper door seals use only 114 round seal material,

either hollow or solid. The hollow seals are better as the solid seals tend to break off.

Before trying to install seal material close the door and see which areas close first. Do not try for a perfectly neat, uniform seal. Instead, put the seal in loosest in the places where the gap is the widest. Inflatable seals, however, are not the answer. They do not do much to correct the irregularities in the door.

To eliminate leaks, take the interior out of the plane. Do not just douse the plane with water. Do a little spot at a time and look for signs of a Leak. Then move on.

When using silicones as window seals, use masking tape to remove the excess and set up for one half hour Groove the edge with a sheet rock knife to insure sharp edges.

And do not try to bring back faded upholstery with fabric sprays. At best it is just a delaying action which will fade again in a few months.

Engine Failure Follows Lean Takeoff

By Paul A. Gordon

I own a 1970 Arrow 200, 4,000 TT, 900 SMOH (new limits).

An hour and 10 minutes after takeoff a slight roughness began and worsened rapidly to almost complete loss of power. This necessitated a landing on a desert road. The cause turned out to be a hole burned through a piston with the expected amounts of aluminum distributed through the engine.

Hindsight now tells me what the cause was and is the reason for this letter.

The previous annual had been done about 80 hours before the failure at Whiteman airport by an aeronautics instructor at a local college, During the flight home to Cable, I noticed that the fuel-flow indicator was showing a significantly lower flow rate than normal at both full rich and lean.

I called the mechanic and he merely suggested measuring the performance parameters of the fuel servo, as that must be where the trouble was (although he hadn't touched it.)

Foothill Aircraft (Upland, California) found the trouble in minutes. The "B" nut connecting the fuel line to the fuel injector nozzle on one jug had worked loose and was allowing fuel to spray out. This reduced the back pressure in the system producing a really low flow reading. (Pressure is what the gauge really measures, not flow.)

I personally had watched the engine run up (cowling off) after the oil filter was installed and neither the mechanic nor I saw fuel spraying out at the time.

So who do I fault on the whole thing? I think the first mechanic should have paid more attention to my complaint, but no one at Foothill A/C bothered to warn me of possible consequences of the too-lean take off. Nor did anyone recommend boroscoping the engine.

In retrospect it is easy to say that I should have thought if it, but if it didn't occur to an A&P why should it occur to me?

The moral of this is that one should never expect that a shop will think imaginatively or creatively, hut rather, like most of us, will plod along in our accustomed groove.

Battery Box Corrosion

By James M. Sublett

I recently acquired my first airplane, a 1971 Cherokee 140. and promptly became a member. I had a problem I would like to bring to the attention of other owners.

Corrosion started showing up on the belly next to the battery drain tube. Yes, there is one and it has a plug on it for some reason.

The plug is supposed to be removed periodically to drain off any accumulated acid. Well, the plug was so old and hard it wouldn't come off and the tube would turn as yon tried to twist and pull the plug off. Since the battery showed signs of boiling over I put the plane in the shop to get to the root of the problem.

They removed the battery box and found that the drain tube was corroded in two and so plugged they couldn't even drill a hole through it. Acid had been leaking inside the plane under the battery box and seeping out around the drain tube grommet and onto the belly on the outside.

Luckily, we caught the corrosion in time and all they had to do was to clean, prime and paint the corroded area. They determined that the battery had a bad cell causing the boil over.

The drain tube was replaced with a stainless steel tube welded to the battery box.

Cherokees Are Nose Heavy

By Lawrence P. Jones

In answer to Keith Williams' question, all of the four-place Cherokees are nose heavy. (I trained in two different 140's and owned a 180).

Full fuel and two normal-to-large people in front, without some rear seat loading, places all of them at or outside the CG limit.

It is very nice that they happen to fly nicely that way because we have all flown them like that for so long that we do not even check the CG anymore.

As a matter of fact, when I did the weight-and-balance calculation to show the examiner for my check ride, I had to figure (with his agreement) a mythical case of oil in the nonexistent baggage compartment. This was necessary for us to fly legally, even with the fuel filled just to the tabs.

I weigh 195 and he weighs about 225, so we exaggerated the problem. But the fact remains that we have all flown our favorite birds beyond the forward CG limits many times.

New Cherokee Fuel Computer

by John Siska

Symbolic Displays, Inc., has received approval to install computerized fuel management systems into the cockpits of single-engine, normally-aspirated PA-28 aircraft,

One day, not long ago, I decided it would be beneficial to have a fuel computer installed in my 1974 Warrior, N42885. I contacted the companies that produce them only to find that not one company had approval for carbureted Pipers.

I called tlie SDI technical department which put me in touch with the nicest and most helpful group of people I have met in a long time.

I explained that there were no fuel computers that I knew of on the market to fit non-fuel-injected Cherokees. After a discussion we decided to use N42885 as the test aircraft to obtain an STC and an appointment was scheduled with tlie local FAA GADO. After five hours of testing the computer passed every phase perfectly.

On a recent extensive trip from Los Angeles to various places in Arizona, New Mexico and Texas, I had an opportunity to use that trust. After concluding business in Dallas, it was time to fight a storm-front moving southeast from New Mexico, and our first leg was from Dallas to El Paso with a fuel stop in Midland.

Departing Dallas the storm was visible to the northwest with a 30 mph head wind; ground speed decayed as we traveled west and the winds picked up to 50 mph.

Turbulence started and the fuel gauge needled danced around; they were about as useful as the head wind.

Through it all tlie CFS-1001A kept steadily displaying exactly how much fuel had been used and how much remained.

The fuel top-off matched exactly to the fuel computers readout. The storm arrived in Midland 20 minutes after we departed and remained in central and eastern Texas for three days. If I did not have a computer I would have made an earlier fuel stop since the fuel gauges seemed to dance around empty more than anywhere else. If we had made this stop we would have been grounded by the storm and lost three days waiting for the weather to break.

There is one CFS operating handbook procedure I found doesn't work as the instructions explain. Before each start up there is a simple preflight programming phase to enter. This tells the unit if there was any change in the fuel amount since the last engine shutdown.

After the data has been entered the computer switches to the in-flight mode and then you would proceed with normal engine stail-up.

The minimum voltage to run the fuel computer is 10 volts and during engine start the voltage drops well below 10 volts. This puts tlie CFS-100IA back into preflight mode. My solution is to complete the preflight mode immediately after start up. It works every time.

One final advantage to the SDI fuel computers--they can help save fuel. I have a four-cylinder EGT installed and lean to peak EGT +25-50 degrees depending on conditions.

Then I do the fine tuning by using the fuel computer to lean by obtaining the least fuel-flow for a given EGT setting. The result is less money at the fuel pump and more in the pocket.

I believe the SDI fuel computer is an instrument worth serious consideration in adding to your aircraft. For more information write to Symbolic Displays, 1762 McGraw Ave., Irvine, CA 92713. (714) 546-0601

When Should You Overhaul

Seldom is the aircraft owner more at the mercy of the maintenance and overhaul shops than when he is shopping for an engine.

Many A&P mechanics do not understand all of the little nuances of engine repair anyway, so it is not unusual for an airplane owner to receive a lot of opinionated (and often unfounded) advice. Shopping by mail can he tricky, too, since the FAA legalistic jargon concerning engine repairs allows for some pretty loose interpretations of what an engine overhaul really is.

When it comes time to purchase anew or overhauled engine for your airplane take a look at all options before committing any funds.

The most important first step is to positively ascertain that your engine actually does need to be repaired or replaced.

For most aircraft engines there is no mandatory service-life limit regardless of any manufacturer's recommended time between overhauls (TBO). In most cases, as long as an engine can pass a 100-hour or annual inspection it is airworthy.

This means that the engine must have acceptable oil pressure and temperature and have no visible defects that could dictate removal, such as a major oil leak.

The fact is, many aircraft engines are torn down for overhaul long before any serious wear has taken place just because the engine has reached arecommended TBO.

Now I do not suggest that engines be operated till they blow up--I just wish mechanics would exercise a little more prudence before telling owners it is time for a new engine just because one or two cylinders have low compression.

With a little sensible shopping you can have two cylinders and all engine accessories overhauled for much less than the cost of a, complete engine. The components inside the crankcase itself (crankshaft, camshaft, tappets, oil pump and accessory drive gears) are designed to he extremely wear resistant if properly lubricated. Keep oil temperature within limits and change your oil regularly and those parts will last a very long time.

Additionally, using a routine oil analysis program you can monitor internal wear and be forewarned of impending mechanical breakdown.

At any rate, it is always a good idea to think twice

about having your old engine removed. If nothing else, get a second opinion before committing yourself. A good mechanic should approve of this out of professional courtesy.

Assuming you are certain it really is time to install a fresh engine, start investigating where the work will be done. If you prefer to purchase a factory rebuilt engine you will be protected by a warranty similar to that covering a new engine and the engine itself will be the closest thing to brand new possible.

This includes anew logbook starting at zero hours. These engines are expensive, though, as no cost is spared in returning them to new condition.

Every part of a factory-rebuilt engine, according to FAR 91.175 will meet original tolerances and limits and the engines will be assembled aid tested to the sane standards as all factory-new engines.

Only a manufacturer or an agency approved by the manufacturer can grant zero-time to an engine, so if you want a new logbook be certain that the repair agency actually has this approval before making your choice.

Shops selling "zero time equivalent" or "re-manufactured" (two temis that mean nothing to the FAA) engines may not be so approved, so be wary of the confusing temiinology.

For less money (usually) you can exchange your engine for one overhauled by a certified mechanic or repair station, or you may elect to keep your old engine and have it repaired by one of these agencies.

Hanging on to your old engine can be a very good idea, especially if it is being removed for the flrst time.

If you offer such an engine for exchange you may be giving up a two thousand hour engine for one having four to six thousand hours of total time. Sure, this other engine will have been freshly overhauled, but you must keep permanent records of all those previous hours and the value of your aircraft may be diminished.

By all means, if your aircraft is due for its first overhaul and you do not need the quick turn around convenience of an exchange engine, keep your old engine and have it overhauled and returned to you.

Concerning the actual overhaul, be careful to determine just what you are getting for your money as there is much variance in the interpretation of federal requirements, Parts inside the engine that are subject to wear should be compared to factory tolerances for new parts, but are not legally required to be replaced until they exceed dimensions listed as service limits.

Technically, then, a part may be worn to the point of being at the very limit of serviceable use and still be legal for installation in an overhauled engine. The engine will be legally aid (temporarily) operationally safe, but it likely to become un-airworthy sooner than tlie recommended TBO.

The only way to assure yourself that nearly worn out parts will not be installed during an overhaul is to ask for a written contract or guarantee specifying that all components will meet manufacturer's limits for new parts. If the repair sliop or mechanic won't or can't do this, he suspicious.

Regardless of whether or not your engine is factory zero-time or one overhauled by a local shop, all of your money will be wasted if you do not give the engine a careful break in. Engines with chrome cylinders are especially sensitive to run inprocedures, but if properly broken in will be extremely durable.

Has Heavy Wing Cherokee

Emory Hukill, of St. Claire, Michigan, reported on a heavy wing problem on his plane. lie wrote:

I have had a heavy-wing problem with my 1977 Turbo Arrow III (N313EM) ever since the first 100 hours when I purchased the plane.

It now has 1,200 hours arid four FBO's have tried to correct the situation by adjusting both flaps and ailerons. I added an Aero Trim and this not effective enough to provide much help.

Currently during my annual inspection, I have asked for review of this situation. We have my left lreavy wing compensated for by putting the Aero Trim to the far right and the left Rap permanently down from the neutral position, approximately 3/4 inch to 1 inch at the trailing edge. (It won't go any further.) This seems to put the wings in balance, but I guess I have lost some speed.

The above is a very annoying situation. Mine was allegedly corrected at a Piper factory service station at Vero Beacli Airport under warranty.

They took 80 percent of the off balance out only. Other FBO's have gone through the procedure, lengthy and costly to say the least, but no rea! good solution has been found.

In my opinion, my left (or maybe right wing) was incorrectly installed at the factory and as a result will never be true or even roughly compensated for. Further, I'm sure Piper would never admit to this possibility. They were reluctatit to do what they had done by the Vero Beach FBO while 313EM was under warranty.

Your idea of a permanent trim tab on the ailerons is probably the best and least costly solution.

The response was as follows:

There are out of balance wings, and there are out of balance wings. Your plane seems to be a drastic example.

The Aero Trim is an excellent device, but it should never have lo be run all the way to one side to level the wings. Furthennore, the idea of using alowered flap to coinpensate for some other fomi of out-of-rigged condition seems costly and dangerous.

You have drastically increased your drag and both speed and economy should suffer.

That plane just has to be improperly rigged and Piper should be able to find the problem. A permanent tab, or an adjustable one, may be useful where there is a small out-of-balaiice condition, but I cannot suggest such a de-

vice where a drastic correction is needed.

I suggest you keep after Piper until the cause of the problem is found.

Pathfinder Is A Big Gas Burner

By George Timme

It was with both sympathy and amusement that I read the letter in the August Cherokee about the "Hungry Pathfinder".

I moved up for a 1965 180 to a 1974 235 two months ago. It did not take long to realize that the Piper owners manual figures and the actual figures regarding gas consumption are not even close.

For example, the manual says that at 75 percent power, the gas consumed is approximately 13.0 gallons per hour and at 60 percent power, 10.2 gallons per hour. However, the Lycoming manual states that at 75 percent the burn is 15.5 gallons per hour and at 60 percent 12.2 gallons per hour--a difference of approximately 20 percent more in each case.

The actual figures may vary even more when one considers that even Lycoming figures are an "ideal condition" situation.

Furthermore, the burn at any power setting in cruise will vary according to the combination of rpm and manifold pressure by as much as 1.5 gallons per hour. I have found that a lower rpm and a higher MP setting (within limits) always results in less consumption. I suggest the rpm indication be checked at annual.

In summary, I believe that anyone who accepts the performance figures of any aircraft manufacturer as gospel is in for more than a little disappointment. Aircraft manufacturers are in business to sell airplanes, and performance figures are often little more than wishful thinking,

By the way, the 235 is one hell of a fine airplane.

ADF Antenna Problem & Cure

By Francis Coleman

On our trip back from Nashville, we landed at Portsmouth, Ohio, for gas, food, and relief!

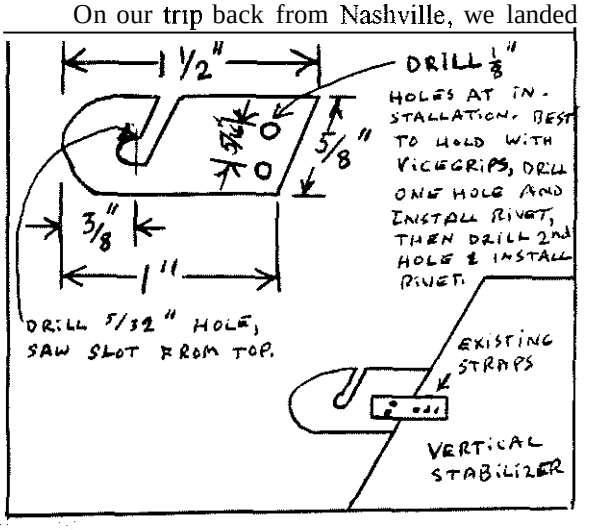

Upon exiting the aircraft, we found the ADF (Clothesline) antenna hanging off the plane, having come loose at the rear attachment point on the vertical stabilizer.

Advise owners to check for corrosion. The contact point is plated steel against aluminum. O w plane is a 1969 PA-28R-200.

I repaired mine by inserting a 1/8 inch thick piece of aluminum between the two thin existing pieces and pop riveting it in place. A drawing is enclosed.

HEET Can Cause Fuel Problems

Piper Cherokees can suffer from a nasty fuel problem as shown in a recently conducted test.

One quick and easy way of sealing Cherokee fuel tanks is to use "sloshing compound inside the tanks. This practice has even been advocated at times by Piper Aircraft.

The stuff is a sticky liquid similar to contact cement. It is poured into the tank, sloshed around, and drained. The chemical then cures into a rubber-like film in about four weeks.

There have been numerous reports of clogged gas lines when sealant has broken off and dropped to the bottom of the tanks.

In addition, the use of certain fuel additives can cause problems.

In one test, several cans were coated with sloshing sealer and then cured. A mixture of gasoline and a fuel additive, HEET, was placed in the cans. Result: the sloshing compound was completely dissolved, resulting in potentially hazardous fuel contamination.

Heet is mainly methyl alcohol of the type used in automotive gasohol. It is commonly added by aircraft pilots in the wintertime to improve engine starting.

But Cherokee (and other low-wing Piper) owners should beware unless they know that sloshing compound has not been used to seal their fuel tanks.

Piper Sends Balance Data

By Victor A Benton

When I bought my PA-28-180, there was no weight data.

I wrote to Piper Aircraft to obtain a copy of the data in their files. I supplied them with my aircraft type, serial nmnber and year of manufacture.

In about 60 days I received copies of all parts of the original weight, balance and operations documents. Piper was most generous in that there was no charge for the service.

Reviewing The Wing Spar Service Bulletin

By Terry Lee Rogers

It is time, once again, to discuss a subject as popular among Cherokee pilots as is the concept of posthumous recognition for outstanding flying. That subject - wing spar inspections.

The concept of de-mating Cherokee wings is so odious to most Cherokee owners that we actually go out of our way to avoid the topic. But, it is a topic which simply will not go away.

Now don't get the idea that some new development has come along. The current service bulletin remains the same as when Piper issued it in June of 1988. But time has come, again, for us to review the history of this hulletin.

This was made painfully clear by a phone call we recently received from a CPA member. He was in the process of attempting to sell his Cherokee and had a sale almost made when a check of the logbooks revealed that his plane had suffered an incident several years ago. Based on the logbook entry, the buyer said "no sale" and informed our member that his plane was subject to an AD which requires his wings to be inspected for cracks every 1,600 hours.

Well, that is not exactly the case, but our member apparently had never even heard of Service Bulletin 886 and the entire wing-spar crack episode had apparently passed him by.

So, as painful as the topic may be to many of you, and at the risk of opening some new wounds, it is time to take a look again at the history and current status of wing-spar inspection.

History - The Infamous AD

The problem developed when a Cherokee 180, used in pipeline patrol duties, crashed on March 30, 1987, after a wing departed the aircraft in flight. The FAA responded nearly immediately with an AD - number 87-8-8 - which mandated inspection of wing spars.

Those inspections - at the time required by law of all Cherokees - would be perfonned by removing the wings from the aircraft. The AD affected the entire fleet of PA-28 and PA-32 models except for the 236, which had a heavier wing spar.

Immediate inspection was required for all aircraft with more than 5,000 hours on the airframe and the inspection was costly - estimates ranged from about $1,500 to $4,000 to make the inspection and not too many shops had experience removing Cherokee wings. The AD was not only costly, hut a shop could cause more damage using improper procedures in de-mating the wing. Worse yet, the AD required the entire process to be repeated each 5,000 hours.

And then, when things were looking extremely dark indeed, an amazing thing happened. After several hundred inspections revealed no further wing-spar cracks, the FAA did something which had never been done before. It reconsidered its position and rescinded the AD.

The matter did not go away, however Immediately, Piper, working with the FAA, issued Service Bulletin Number 886 on June 8, 1988. That bulletin breaks the Cherokee line into four classes and requires inspections of the wing spars depending upon the class a particular ship falls into.

The service bulletin has several advantages over the AD. First of all, service bulletins are not mandatory (except for foreign owners and for commercial operators). Private owners are not under legal constraint to follow the bulletin.

Secondly, the service bulletin drastically increased the time interval for inspections for most Cherokees - those which had normal histories without recorded damage.

But although the service bulletin does not have the weight of law in forcing owners to perform wing inspections, the public is well aware of the bulletin and it has hurt the marketability of aircraft with known damage histories or with incomplete log books.

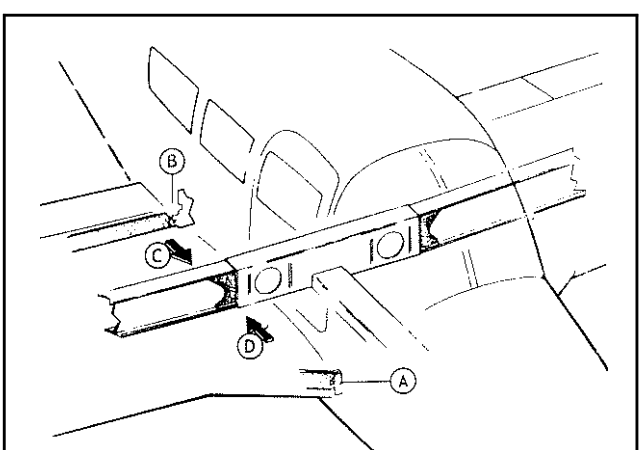

Bulletin Calls For Wing Removal For Inspection

What the Service Bulletin Says

The servi e bulletin breaks the fleet down into four classes: normal, severe, extreme, and unknown. In addition, the bulletin breaks planes into two groups. Both classifications need to be considered when planning compliance with the bulletin.

First of all, let's consider the group. Group I Airplanes - those witli the "strongest" wings, are the basic . ' '. 140, 150, 160, 180, Warrior, Warrior II, Archer II, and the Arrow and Arrow II.

Group II platies, according to the service bulletin, require more attention - cut all times in half for these planes (i.e., plan on inspections every 800 hours for planes in the severe or extreme classes.) Group II planes are the Arrow and Turbo Arrow III and IV, the 235, and the Cherokee Six (both 260 and 300).

Now that we have determined what group your plane fits into, let's consider the class, as determined by Piper.

"Normal" aircraft are, as the name implies, those planes which have had normal service, no unusual accidents, and which do not fall into one of the other three classes.

Owners of these planes would need to get an inspection every 6,000 hours (this is the bad news). The good news is that the first inspection does not have to be complied with until the aircraft has been in operation 62,900 hours (approximately 150 to 600 years of normal operation.)

Remember, however, to cut these times in half For group II planes (i.e., inspections are needed every 3,000 hours after the first 30,600 hours of flying.)

The next two classes may be considered as one unit - the bulletin treats them alike.

"Severe" Category airplanes are those which were engaged in low-level flying, such as pipeline patrol, fish or game spotting, power line patrol, or aerial advertising. These planes are those which spent a significant period of time flying below 1,000 Feet AGL.

"Extreme" Category airplanes are those which suffered damage as the result of operations from extremely rough runways, flight in extreme damaging turbulence, or other accidents which required major repair of wings, landing gear or the engine mount.

Both of these categories of aircraft require inspection every 1,600 hours (800 hours for Group II). For aircraft in the severe class, however, inspections do not need to commence until the plane has achieved 3,700 total hours time in service. No such amnesty period is available for extreme class planes.

The final category of aircraft, "Unknown:' is one in which the history of the aircraft is...unknown. Basically, the service bulletin seems to say that such aircraft need to receive an initial inspection within 50 hours (this should have already been done) and, based upon what the inspector finds, the plane should then be assigned to one of the other three classes for the purpose of repetitive inspections.

Inspections required by the service bulletin require pulling the wings and then doing a dye-penetrant test (or equivalent) for cracks in the wing lower spar cap and in the upper wing skin. Obviously, any damage found would also need to be corrected before the plane was returned to service.

And that about wraps up the service bulletin. Compliance is not required by law, but the bulletin remains in effect and every Cherokee owner should be aware of its requirements, if just for the purpose of avoiding egg on the face when talking to potential buyers or sellers of aircraft.

Starling Is Improved

By Lawrence P Benjamin

I, too, shared the endemic starting problem so characteristic to the Cherokee family. I have a 1974 PA-28-151 that I purchased in 1977 with 830 hours. 6U4 now has 1,420 hours tach time and I am pleased to report that for the past year 1 have had no problems starling.

No magic involved, either. The starting problem manifested itself the day I picked it up. I had to leave the plane with the FBO who diagnosed the difficultyas a weak battery. Before very long I had replaced two starters and bought a new battery before it would start with any degree of regularity. (Sound familiar?)

My suspicions about the aluminum wire were confinned when I noticed the charred insulation around the battery wire lug at the starter solenoid. I then replaced the original aluminum solenoid-to-starter with good old copper and while the situation seemed to ease a bit, it never left.

At annual time, in desperation, I suggested replacing the aluminum lead from the master solenoid to the starter solenoid, but my FBO touted me off of that kick and instead proposed that the short "ground lead be replaced by a copper lead.

The starter armature was cleaned, new brushes were installed, aid the situation seemed to be eased. Although I never could get it to start on the first try, I was not able to get it past that first compression point and then get it to crank by timing the bounce. It usually started on try one or two.

This condition was at least tolerable and I felt while it was a condition I could live with, I had to look for ways to make the starting process easier on the starter.

First, I made it my practice to remove the battery when the weather went down to 40 to 45 degrees F and to bring it home to a warmer place. I periodically exercised the battery followed by a slow (trickle) charge thus milking five years of use.

Next, I switched to the Shell 15W-50 oil to ease starting in cold weather. I also make a strict practice to prime about 10 to 12 strokes when the weather gets down to freez-

ing or below and about four or five when the weather is warm.

After priming I always pull the prop through by hand about four full revolutions to he certain that the cylinder walls are oiled.

As I said, the above practices eased the situation until the 1983 annual when my FBO called to tell me that the Bendix drive on the starter should be replaced. It seems that the shaft and gear were out of line and as a result, the Bendix gear would not mesh properly with the larger ring gear.

Over a period of time, the misalignment caused the Bendix gear teeth to become distorted which, in turn, caused unwanted friction between the mating surfaces of the two gears. Needless to say, the Bendix drive was replaced, the gears were greased and old starting problems now appear to have been reduced to the point where it starts on the first try 90 percent of the time.

In summary, let me suggest that before you go to the trouble of replacing the aluminum buss that runs from the master solenoid to the starter solenoid or that you try other exotic ideas, that you have the Bendix unit checked and replace it if the gears are worn or the plunger and gear are either the least hit out of line or out of round.

Further, it is important to prime and then to pull the prop through about four complete revolutions. This procedure has worked wonders for 604 as now I get it to start after one half turn of the prop. Try it, you'll like it.

Accessory TBO?

I know that the TBO on my engine is 2.000 hours, hut what about the accessories'? How do I find out when and if they need to be overhauled.

Bill Murphy
Boston, MA 02172

Many engine accessories do not have a specific TBO. An exception would he the early Slick Magnetos which were designed to be thrown away at 900 hours (newer ones can he rebuilt.)

Accessories are considered to have the same TBO as the engine on which they are installed unless a specific TBO is specified. To avoid problems, accessories are overhauled at the same time as the engine.

If an accessory requires overhaul early, a careful Logbook entry should be made. This will aid the mechanic in determining whether service is required at the time of the engine overhaul.

Auto Gas Problems

We have received several phone calls from memhers who have experienced power failure using auto fuel in their Cherokees. So far no accidents, but several scared members called to warn us of a severe and dangerous prohlem.

One member reported he was using fuel which he believes was purchased in March and may he a "winter blend."

He applied full power for takeoff and halfway through his takeoff run the engine quit. Even with the electric pump he showed no fuel pressure.

The pressure returned and he once again commenced a takeoff. Later, the engine quit at 3,000 feet, hut restarted when the electric fuel pump was turned on.

This member reports that he has been using auto fuel without any prohlems, hut thinks the prohlem developed when all the avgas was finally exhausted from the tanks. He feels that any residual aviation gas in the tanks may solve the prohlem.

Another member, experiencing partial failure due to low fuel pressure, filled one tank with aviation gas and one with auto gas to do tests. He experienced loss of power with the auto gas, hut power was restored when he switched to the tank with aviation gas.

This member says he feels the problem is gas boiling between the electric pump and the main fuel pump.

The Cherokee fuel lines are all insulated, hut the line from the electrical to the mechanical pump passes within three inches from the muffler. He has indicated he will try adding some heat shielding in this area and will report hack on his success.

But the problem in Cherokees may become fatal if an engine is lost at an inopportune moment. Members report that most problems occur after the engine has already been run.

Typically, a landing is made and the owner exits his plane for a short time. The owner shortly thereafter restarts his engine and prepares for a takeoff without performing a run up (after all, he just flew the plane.)

The heat buildup under the cowling then brings the problem to the forefront.

It is suggested that members using auto fuel may want to keep one tank filled withavgas during the hot months for takeoffs and for backup should prohlems develop in flight.

Speed Kit Report

By Ron and Mary Santouosso

A short time ago I promised you the story on the Laminar Flow System kit and here it is.

I decided to go the whole nine yards. I ordered the complete kit consisting of aileron and flap gap seal, flap hinge covers and the fuel tank bolt fairings. Sure enough, about two weeks after I dropped the check in the mail box the kit arrived by express mail.

All inaterials appeared to he of good quality. The instructions are quite detailed including color pictures and. mechanical drawings.

All necessary paper work was included; even down to a formula for calculating what gains you have achieved with the kit.

I might add at this point, Laminar Flow does not

include rivets and there are about 150 or so required. My hand got a little sore after hand pulling 150 or so cherries. Laminar Flow claims it takes about 12 hours for the complete installation and they are just about on target. We took about 13 hours including painting of the fuel tank bolt fairings.

How does N6607J like the change? I would say she likes it just fine, and so do we. We are basedat Fallbrook, California, about a 2,200 foot strip. On the first test ride 07J got off noticeably quicker and the increase in rate-of-climb is the first thing you notice, about 250 to 300 feet-pre-minute up to 7.500 feet where we leveled off.

Speeds run over a fixed course support an 8 to 10 mph gain. The airspeed indicator, corrected for altitude and temperature, has indicated around 145 mph for the last 1,700 hours at 7.500 feet. It now settles around 155 or so.

The controls feel a little more firm. This is due to the configuration of the aileron seals. However, it is a pleasant firmness.

There is a noticeable increase in aileron sensitivity, particularly at lower speeds in approach configurations, My wife commented that N07J is much more sensitive to ailerons at cruise speed also.

I performed several stalls, power on and power off. 07J seems to stall at a lower speed, however, 1 will have to do additional testing to provide any numbers. But the increased aileron control in a stall is very apparent.

Would I do it again'? You hetcha I would.

Starter Fix

By Gary Fisk

(Return to tlie son of the sequel to the hard starting problem continues, Part III...soon to be a major motion picture.)

Our airplane is a '74 "Flight Liner" (no back seat or wheel pants) with a Lycoming 0-320-E2A. We bought it in august. 1979 and since day one we have suffered with the chronic hard-starting problem.

We have religiously tried all tlie fixes that have been suggested in this publication. We bought a new battery, scuffed off any oxidation or corrosion on tlie connectors, spritzed the starter ring gear with WD-40 and recently bit the bullet and installed copper battery cables, which is a fair amount of work.

Well, trying to start that airplane was still a depressing exercise. There really isn't any classy way to start an engine with jumper cables.

Then I remembered seeing a small ad in "Trade-a-Plane" for a mail order house in El Reno. Oklahoma.

They advertised carburetor repair kits, generators and starters. So, in desperation, I called them and described our problem. I talked with a representative who proved to he very helpful.

I told him we had a Delco 1I09657 starter and inquired about ageared starter. He said, "Oh yes, yourstarter has a 10/12 pitch so you may need to change the ring gear on the back of the prop. Let me check if we have a geared starter with 10112 pitch."

He came back to tell me he had a 110151G geared starter that would fit our airplane for $350 which he could UPS right out to us. So I gave him the go ahead.

Now, just a brief word about that price. Total cost, including shipping, was $409, with $50 refundable on the return of our old starter.

This may seem a bit steep at first. but bear in mind that we hadrecently priced astock replacement starter from SAN-VAL, Van Nuys, CA (the local good guys of discount replacement parts) and they quoted a price of around $255 exchange (1984).

So for an additional $100 we got a geared starter. And yes, it cranks as we have always thought it should and it starts!

So before you jump off a bridge or set tire to that cursed non-starter of yours, why not give these guys a call? We are very pleased with our geared starter. I am confident our starter problem is finally laid to rest.

Problem Wetness

I own a Cherokee 6 and have one problem with which perhaps you or our metnbership can be of assistance. I occasionally get water underneath my two rear seats after a heavy rain. It doesn't always happen and the water is not coming in from the sides or from above.

I have been using a cover for the outside and have drilled several boles in the bottom of the fuselage. While this may have been of some help it has not eliminated the problem. Perhaps somebody else has found the cure.

Jack H. Marin, CPA
100 Menlo Park
Edison, NJ 08837

The problem with curing a leak such as yours is finding it. As you know, a teak at one place can run quite a distance and become a puddle somewhere else.

To determine the location of the leak it is necessary to remove upholstery and seats from the rear section. Then, with one person in and one outside the plane, a water hose should be gently sprayed over the exterior surface. No downpours are required. Just gentle, intermittent spraying until the leak is located.

The three most likely areas are side windows, the wing root, and the tail cone.

Once the source is determined. the leak can be cured using silicone putty or another appropriate technique.

Sticking Valve Damage

One of the regional service managers at Lycoming indicated that he has had experience with sticking valves over the years.

He commented that the engine will almost always provide a warning by running very rough at start up. As the

engine warms up, it may then smooth out after a few seconds and run normally, but the initial roughness is a warning that preventive maintenance action is needed.

Just a few days after these comments, a conversation with an aircraft owner confirmed the accuracy of these comments.

A recently purchased aircraft was flown to altitude in the vicinity of the airport the satisfy the pilot of the aircraft's capability to fly over mountainous terrain during a planned vacation trip. Satisfied that the aircraft and engine were capable of meeting his requirements, the pilot undertook the vacation trip. All went smoothly on the first 300-mile leg of the trip which ended with a planned overnight stop.

When the engine was started the next day it was very, very rough, but smoothed out and ran normally after a short time. With the engine running properly, the vacation trip continued to its destination. The aircraft was then tied down and not operated until the return trip about a week later.

As the engine was started it again gave indications that a valve was momentarily sticking. It ran rough for a few seconds, and then smoothed out.

With the engine running smoothly again, the return trip was started. After one or two hours in flight at altitude over mountainous terrain, the engine ran very rough again for a short period of time and then smoothed out. The pilot decided to land at the nearest airpon.

Engine examination revealed a considerable amount of oil leakage. The cause was a valve which had stuck solidly and caused the pushrod to bend. This bending ruptured a pushrod shroud and allowed oil to escape. This is a classic example of the damage sticking valves can cause.

The lesson to be learned is quite simple. Do not neglect the warning signs. Perhaps the example here will allow others to recognize a rough running engine at the start up as apossible indication of sticking valves. The next step is to take immediate action to prevent damage.

Althoughthere may be an occasional exception, it is almost always an exhaust valve which sticks. To prevent further valve sticking and to reduce the possibility of damage, all exhaust guides should be cleaned of any carbon. varnish or other contamination buildup. This is accomplished by reaming the guides to their original size as specified in Avco Lycoming publication SSP 1776, table of limits.

Avco Lycoming Service Instruction 1425 provides recommendations to reduce the possibility of valve sticking. Part III of the instruction gives aprocedure for reaming valve guides which can be accomplished without removing the engine from the aircraft or the cylinders from the engine.

Idler Pulley Bearing

By George Durham and Ernie Raudenbush

I am writing in reference to the Airworthiness Alert for the small ($80) idler pulley on the Lycoming-York compressor air conditioning installation mentioned in the October issue.

Having had a similar experience we found it worthwhile to replace also the bearing in the large idler pulley and the beaning on the air conditioner clutch pulley.

A worn bearing or out-of-balance clutch pulley will cause your gyro horizon to vibrate to destruction, not to mention the extra vibration throughout the rest of the ship.

These bearings or a better quality can be purchased through and pressed on by your local automotive supply store (approximately $30 for both of them).

We hope this helps someone else avoid the expensive route.

Electrical Cure

By Elliott Hamilton

My brother Dave and I managed to solve our electrical problem. Let me describe our tale to you. Maybe we can save other Cherokee owners some time and grief.

We purchased 8748E in late July in time for the EAA convention. We had a consistently hard to crank problem (which plagues many owners).

After each start the alternator put out 60 amps for a long time, finally tapering off to a reasonable charge rate.

One day the amp gauge showed a pulsating charge...zero to forty amps at an interval of about 3/4 second. The meter swing was less after awhile as the battery came back to life.

Quite often the meter would show a healthy charge for several minutes *only* to start the pulsing as the rate went down. Eventually the pulse charge was all that it would deliver.

Speculating that a faulty voltage regulator would do something like that we installed a new one only to have the exact same symptom. That $80 joke caused us the perform the following tests:

1. We placed 12 volts from the battery on the field wire of the alternator, the wire attached to the yellow lead from the voltage regulator. (Another way to tell the field wire - it is not the one going to the overvoltage protection relay.)

Result: a healthy 60 amp charge with no pulsing. (It is not a good idea to prolong this, as the alternator is putting forth its best effort which will eventually lead to its premature death.)

2. We placed 12 volts from the battery on the regulator lead which goes to the overvoltage relay.

Result: A healthy charge rate, decreasing like a normal system should work.

Conclusion: The voltage regulator was good (after $80 it had better he.)

3. We placed 12 volts on the overvoltage relay. Keep in mind that wires were connected back to their original place as we progressed through the charging system.

Result: Same as in #2.

Conclusion: The overvoltage relay was good.

4. We bypassed the ammeter with a high amperage shunt and a multimeter.

Result: The pulsing was back.

Conclusion: It wasn't a bad ammeter.

5. We bypassed the circuit breaker.

Result: The pulsing was still there.

Conclusion: It wasn't the circuit breaker.

6. We bypassed the alternator switch portion of the master switch.

Result: BINGO! The pulsing stopped.

How on earth could the switch, a simple mechanical device, do that? After installing a new switch we disassembled the culprit and noted badly pitted and dirty contacts.

Terry, I was an auto mechanic for six years, rebuilding engines and transmissions and trouble shooting electrical systems. My brother is the service manager for a company which manufactures floor cleaning equipment which runs on 24 volt battery systems. Neither of us ever saw anything like that!

It is still hard to crank. After several pushes of the starter switch and the resultant half turn of the prop, the starter suddenly comes alive and spins the engine like it should have on the first try.

Auxiliary Vacuum

Don McCaig, of San Francisco, California, asked about standby vacuum systems. The answer:

Three types of auxiliary vacuum are available.

For a couple of years, auxiliary pumps, operated by separate electric motors, have been available for about $1,500. In effect, they use another dry vacuum pump connected to the motor to provide a redundant source.

Now, two nifty systems have come on the market to provide auxiliary vacuum at even lower cost.

Precise flight, 63120 Powell Butte Rd., Bend, OR 97701 (800-547-2558), offers a system which uses the vacuum on the intake manifold to generate vacuum for the instruments in an emergency.

The $350 system requires approximately three hours of shop time for installation. It requires the pilot to switch to standby when he gets a low vacuum indication from a warning light and to insure that he has a four-inch vacuum differential in the manifold.

The system comes with a chart, which is affixed to the panel, which indicates different power settings at different altitudes to maintain the proper differential.

At higher altitudes, liowever, the differential decreases and the pilot will probably have to decrease power to maintain enough vacuum to operate the gyro instruments properly.

An even simpler system is available from A&I products, Inc., 5500 Peru St., Plattsburgh, NY 12901 (518-563-2282). The system consists of a venturi (just like you used in the old days), located outside the plane in the slipstream, and a valve for connecting it to the vacuum lines.

STC'd for Cherokees through the 181, A&I's standby system provides a required four-inches of vacuum from the slipstream provided by the propeller. It requires no connection to the engine at all.

This system, too, retails for $395 and the company claims an installation time of three hours.

Unfortunately, many pilots will think the venturi too ugly and others will be unwilling to sacrifice speed because of additional drag from the venturi. Also, the present model has no heating and will not work in icing conditions.

It is a system, however, which deserves consideration by anyone who feels he may need a backup source of vacuum power.

Horsepower Graph

By Lewis Dewart

I thought the members might like to see a "thrust horsepower required and available plot vs. true airspeed" for an average Cherokee.

I have worked this out for my 160 hp PA-28-140 at 1,950 pounds loading with a cruise propeller at an altitude of 5,000 feet - sort of all around conditions at whichmost of us fly.

Note the horizontal axis starts at 40 mph and each mark is an additional five mph. These are true airspeeds at the selected altitude.

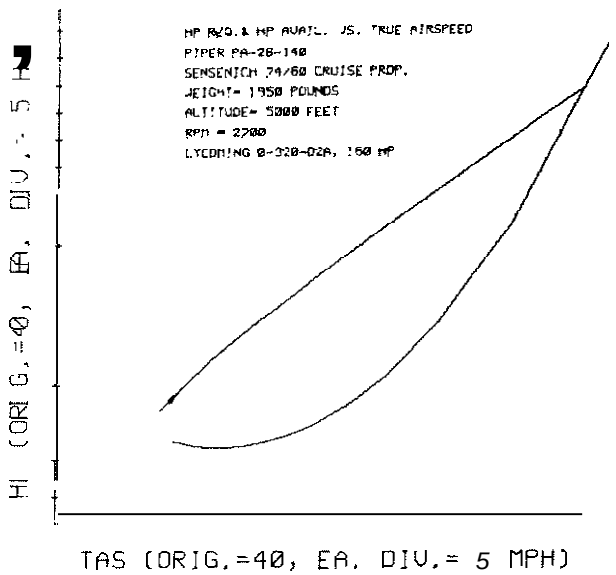

The vertical axis starts at 40 hp with a mark at each additional five horsepower. The lower curve is the calculated thrust horsepower required for the early PA-28 design with the old-style wheel fairings and, again, at 1,950 pounds flying weight and 5,000 feet of altitude.

The upper curve is the thrust horsepower from a Lycoming 160 engine witb a 74"/60" propeller.

Intersection of the two curves occurs at a true airspeed of 139 mph and this represents the top speed at this altitude with this particular engine and prop.

The informed reader might want to measure off the excess horsepower and do some plotting of the Rate-of-climb

vs. Velocity.

These curves were obtained using classical aerodynamic calculations with computer assistance.

Tanis Pre-Heat

By Bob Daniels

I have a Tanis preheat system. It was installed right after delivery on a 1981 Archer.

I leave it plugged in from December until March. It is the perfect answer to cold-weather starting. We have been able to start without prime at temperatures of -30 degrees.

The system uses about the same amount of elecmcity as two large light bulbs and is easy to install by an A&P.

The cylinder probes are installed in ports which are reserved for CHT probes. A heating element is bonded to the side of the oil pan and the plug is tied to the oil filler tube for easy access.

For extreme cold weather Tanis recommends an engine cover (an old army blanket or two works nicely.) Lycoming recommends preheat below 20 degrees F.

The company provides good service (Tanis Svcs., P O Box 117, Glenwood, MN 56334 800-443-2136 or 612-634-4772.)

I became interested when the local FBO "burned up" the nosewheel fairing on my brand new Archer with a ground heater.

Inflatable Seals

I have had problems with leaks on my PA-28. I understand there is a company which is offering inflatable seals. What can you tell me about this? Is it worthwhile?

Lawrence Dean
Seattle, WA 98134

Inflatable seals are offered by Bob Fields Aeroaccessories, 340E East Santa Maria, Santa Paula, California 93060 805-525-6236. They replace the factory door seal and the company claims a significant noise decrease in use, but makes no claims that the product will reduce leaks.

The seal comes with a rubber bulb which you squeeze to inflate the seal. The company claims a noise reduction of from 4 to 14 db, which certainly would he significant.

The seal is fully STC'd. The main drawback is price - from $300 to more than $500.

Fuel Leak, Auto Fuel

By Stan Hines

What started out as a slight fuel odor became more serious just prior to annual. Investigation showed that the fuel line fittings had loosened behind the left inside panel by the pilot's seat.

The fittings on the selector valve, while not leaking, also needed some (but much less) tightening.

Since that time no more odor. I pass this on since I have been told by various mechanics that the cabin odor could have come from a had "O" ring in the fuel selector valve, a broken overflow line in the left tank or a leaking primer pump seal or line.

I advise anyone experiencing fuel odors in the cockpit to look for loose fittings before allowing expensive and unnecessary tank repairs.

I also have some comments on auto fuel use.

N-575H is a 1974 Wamor in which I am using auto fuel under an STC from Petersen Aviation.

I have put nearly 100 hours of both local and cross-country flying during this summer and fall in Florida using auto gas. Cross-country altitudes reached as high as 9,500 feet and airport temperatures were close to 100 degrees.

There has never been any indication of trouble. Quite the contrary! It runs as well as it did on 80/87 Avgas and far better than on 100LL.

In fact, 100 LL is the pits as far as I am concerned. Even with frequent plug cleaning I never knew (using 100LL) whether I would he able to make a flight or not (due to misfiring on run up).

Wing Root Leak

I have been having a problem with water leaking in my PA-28-180. After fixing the door seal and sealing the windows with GE silicone there is still some leaking on the left side. I think it is coming from the wing root.

Is there an effective way to stop wing root leaking? I thought about setting the rubber gasket in silicone. I will appreciate your recommendations.

Alan G. Hendley
Huntington, WV 25705

Water leaks are perennial problems with PA-28 and PA-32 aircraft and the wing root gets its share of attention as the culprit.

The first thing, of course, is to find out whether the problem is actually at the root. As you know, in an airplane cockpit water has a tendency to enter at one point and then run along the floor or channeling and collect at another point. The problem may be at a window or it could indeed be the wing root.

Unfortunately, I know of no sure fire method of stopping the leaking which works universally. Other than working the seal material and attempting to insure that all seams are closed, I can offer little hut encouragement.

Loose Radio Tray

Have you had any work done on your radios lately? A report involving a British Cherokee 140 may save you a real problem in the air.

During an annual inspection the control wheel aileron chain was found to be suffering interference from a

loose radio tray.

When the control column was pulled back, one of the fastening pins had been knocked out and the tray dropped. The CAA reported that the tray could have dropped even further which would have made it impossible for the pilot to pull the wheel aft of neutral.

Be alert to the possibility of interference with the control column, especially after any work is performed on your instrument panel.

Nav-Radio Fix

By Dave Graves

For those having problems with their nav radios, they may want to check their Balun.

The "V" antenna on the tail of the plane is not simply connected to the cable to the nav portion of the radio. In order that the radio look to all points of the compass correctly we must have a special system of wiring this antenna using a Balun.

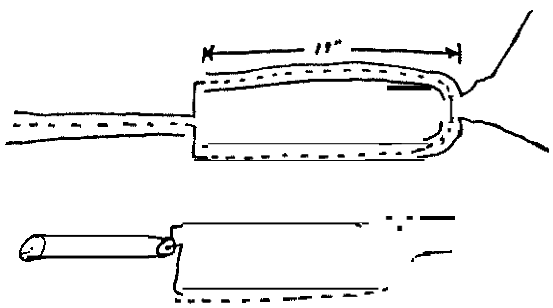

We have uncovered many, many cases of this thing being so corroded and neglected that problems resulted.

This Balun can be made entirely from RG58/U. It is often a source of trouble in older planes due to corrosion and should be inspected and replaced if it looks defective.

Lance Leak In Tail

By Bernie Sherwin

We were experiencing wetness in the aft section of my '77 Lance until I mentioned the problem to my FBO. He had similar experiences with a Seneca.

The problem he discovered was that the water was coming in through the tail.

The solution was simple: unplug the drain holes at the back of the belly of the plane that were originally placed there to alleviate similar problems. In fact, the FBO drilled a few more holes in the same area and I haven't had the problem again.

Starting, Re-Chroming & Strut Pump

By Robert Hupp

I am quite surprised at the number of people who are complaining about hard starting. I do not know whether this is a problem peculiar to particular airplanes or cold weather, but let me pass on a technique that seems to work for me.

I start out by going through the normal checklist as recommended by Piper. The only difference is that as I am cranking the engine I slowly advance the throttle until the engine fires. I then make a little pencil mark on the throttle rod where it goes into the instrument panel.

After doing this for a couple of weeks, I found that all of the marks on the rod were within a quarter inch of each other. I then made the marks "permanent" with amagic marker. Now my procedure is to "throttle to the mark rather than "throttle cracked," and my plane seldom cranks more than two or three blades before settling down to a nice steady roar.

I just went through the common problem of re-chroming and rebuilding the nose strut. This was not quite as traumatic an experience as it could have been due to a friendly A&P who told me what to do and then let me do it.

The major expense was taking the strut down to the local FAA repair station to be re-chromed and yellow tagged.

Before I bit the bullet and rebuilt the strut, I was trying everything I could do to avoid the problem. In the process. I discovered that some of the little air compressors you can buy at auto supply stores - the ones you plug into the cigarette lighter of your car - actually can put out enough pressure (200-220 psi) to pump up your nose strut.

The trick with these small compressors is to have someone lean on the tail and hold it down - very carefully. Extend the strut to the maximum length and pump it up to about 200 - 220 psi, whatever your pump can put out.

When you remove the air hose and put the plane down on its nose again, this will give you three or four inches of extension if the fluid level in the strut is anything even remotely close to what it should be. If not, you will have to add fluid and try again.

This kept me going for several landings when the nose strut deflated on me and there was no mechanic with a strut pump or nitrogen bottle in sight.

Under Cowl Fuel Leak

By Thomas Raffacle

We had an experience today that I thought might prove to be a valuable lesson to other readers. My wife and I are both pilots and fly a 1965 Cherokee 235. We planned to take a short cross-country down the Colorado River for lunch.

8931W has always been a desert airplane and does not like starting in cold weather. Our usual start up procedure includes about four shots of primer and an energetic pumping of the throttle while she cranks.

Another quirk of hers is that the starter always spins, hut does not always engage the flywheel. When this happens, turning the prop alittle ways by handusually helps the starter to catch.

Today, we had the same problems, but while stand-

ing outside the lane as my wife cranked it, I noticed fluid being blown out of the lower cowling. I had her abort the attempted start while I checked what I assumed was water dripping down the nose strut.

In fact, it turned out to be fuel! I had her turn everything off and we pulled the top cowling. The leak appeared to be around the intake manifold and there was a puddle of fuel in the lower cowling so I went for our mechanic.

His first thought was that we over-primed it and that the fuel had leaked out of the carburetor venturi. On closer inspection, however. he found that one of the primer lines had tubbed against the manifold and had worn through. The resulting pinhole leak had sprayed the intake and exhaust manifolds with raw fuel and it had collected in the bottom of the cowling.

The primer lines on our 0-540-B4B5 should have been secured by insulated clamps to the intake manifold to reduce vibrations and prevent chafing. In fact, only one line was.

11W had a major overhaul about 200 hours ago and had an annual about 20 hours ago. But the potential for a problem like this was not caught. We pull the cowling occasionally to give the engine a good looking over in preflight, but we never thought to check the primer lines for chafing.

I am thankful that the starter problem had me outside watching the start - a spark or backfire could have made this a very tragic or expensive lesson. I do not h o w how service bulletins are initiated by the FAA, but this experience makes me wonder if other folks are aware of the importance of inspection of those innocuous little copper tubes under the hood.

Cowl Vibration Noise

By Max E. Brown

That "funny Dakota noise" or, "Cherokee chatter" as I call it, lived in my Cherokee, 80D, for awhile. Most of the time it would show up in an uncoordinated right turn.

After going over the plane very closely and then flying out to the practice area and trying to make it occur again, I gave up and did not let it bother me anymore.

Shortly after that I noticed the engine baffle seals were worn out and laying down on the engine. Part of it even turned out so it could not longer seal against the upper cowl.

I wanted something stiffer than what came on the engine and finally found some 3/16 inch thick neoprene high pressure steam gasket material.

While putting this on I found the holes in the front bottom cowl strap elongated and this allowed the top cowl to vibrate under certain flight conditions.

Also, the hook on the right front side of the top cowl had almost worn a hole through the metal engine baffle.

After installing the stiff engine baffle seal I had a difficult time getting the top cowl on - it really fits tight. But I have stopped the "Cherokee Chatter." Some day I will get around to repairing or replacing the bottom cowl front straps.

Rusty Panel

By C. A. "Stu" Studebaker

With the advent of winter and little decent flying weather in these parts, I put my Cherokee out of commission for a number of projects including new windshield and windows, sidewall upholstery and resealing of the right fuel tank.

The fuel tank was done by Skycraft Corp, and I was very impressed with their work and service.

As long as the windshield was out anyway, I decided to redo the glare shield, as the plastic was old and getting brittle. That was when I discovered something that may be of interest to other members.

Any leakage around the windshield that can get under the plastic glare shield covering will saturate the padding and be held there. I do not know what the source was, but I suspect some reaction between the water and any or all of the components in the glare shield covering plastic.

At any rate, when the old covering came off there was a strong odor similar to acetic acid and corrosion was starting in several areas.

1 have since talked to another owner who recently purchased a Cherokee with a very leaky windshield and a history of not being hangared. He found the entire top of the glare shield eaten out to the extent that re-skinning was required from the top of the firewall back to the instrument panel. Seems to me like a good reason to keep things sealed tight, especially if you do not have a hangar.

Piper SB - Wing Inspection Plate

Piper Service Bulletin No. 789, dated January 17, 1985, provides for the installation of a new access plate for the rear of the wing to give access to the wing attach fitting.

Piper also announced asecond kit to allow modification of the wing spar if the new access plate shows corrosion.

As announced in the letter, Piper considers this bulletin mandatory. Although it would be legal to ignore the letter, it would not be good sense to do so. There have been corrosion problems at the rear spar attach point and ignoring it may result in a dangerous flying condition.

This letter covers most PA-28 and PA-32 models with the Hershey Bar wings. Compliance is suggested within the next 100 hours or the next inspection, whichever occurs first.

To date, no wings have been lost, but several have showed corrosion when the wing was removed for other servicing.

The "inspection access hole kit," part number 765-106V, sells for $40.28 from Piper. Two are required for a complete job, of course. The "aft wing spar modification

kit," Part number 764-998V, is $18.80, and two are required if corrosion is found at the spar.

Engine STC is Expensive at $22,000

By John R. Watson

My Cherokee 140 is unusual in that it sports an IO-360-C1D6 Lycoming engine with an HC-C2YK-1B Hartzell constant-speed propeller.

At this time I have spent $22,000 and five years to get an STC, which I was issued in September, 1984. It has been a long and costly experience. If I had it to do over again I would not attempt it.

At first I was going to just install a 180 hp engine because there had already been an STC issued for this. I contacted the people that had this STC t try and buy a copy of their paperwork, but they would do the conversion and install a 180 hp engine. The cost would be $18,000, which at the time I thought was ridiculous.

The A&P mechanic that was going to help me do the conversion said that because we were going to have to obtain an STC of our own or spend the $18,000 we might as well install a 200 hp with constant-speed propeller.

Very little did I know it was going to be so difficult. First of all I located an engine and propeller in New Orleans and went down and picked them up and brought them back. We removed the old engine without difficulty. The conversion was very easy - everything fit like the old engine with a few modifications.

So now the engine is installed and time has come to apply for an experimental and work on what is required by the FAA for the STC. This was just the beginning.

I was living in Arkansas at the time so I allied for an experimental certificate with the FAA GADO in Little Rock, Arkansas. I also received an application for an STC, which I filled out and sent in. Back came three more pages of things the FAA wanted us to do, which were more major than the engine change itself. None involved changes in the aircraft -just stress tests.

I won't go into all of them because there are too many, but to give you an example, one of them was to tie the tail down and the wings up so the wheels were off the ground and put 2,700 pounds on the nose bowl. This was a static test to see if the aircraft was strong enough for the new engine.

Anyway, after we completed these tests and sent them in, the FAA gave us another three pages to do. In the meantime, the man we started with in Little Rock was transferred to Dallas and we either would have to start all over or go to Dallas.

Also, the A&P I was working with lost interest and I had to find another mechanic. I found another mechanic, started working with the Dallas office, and they gave us another three pages to do.

When we finished this the man I was working with retired and I was transferred to the Atlanta FAA Engineering office. I had to start all over again.

By this time I had moved from Paris, Arkansas to Denver, and then to Modesto, California. When I got to California 1 started over again with the Los Angeles office.

This time I was assigned to Mr. Al Strickfaden with the FAA Aircraft Modification Section and the whole thing started to come together. I worked with six different FAA men on this project and I don't think any of them knew what he was doing until I got hold of Al Strickfaden.

Now for what I have accomplished with my aircraft. First of all, before I installed the engine I tried everything to gain a little speed, shorter takeoff and more lift. Well, I started with the gap seals from Knots-2-U and they helped a little bit.

The next step was the Met-Co-Aire tips which made little difference, although they did add to the looks of the plane.

But with the new engine and propeller I now have a cruise speed of 155 mph indicated with eight gallons per hour fuel bum and a top speed of 165 mph with 12 gallons per hour fuel bum.

My takeoff roll is half what it used to he. I have flown the aircraft against an Arrow. We took off together and flew for a distance of 250 miles. The Arrow beat me by seven minutes. I used 12.9 gallons of fuel, the Arrow used 15.2 gallons.

All in all, my little Cherokee 140 is now quite a performer. The engine conversion was amajortaskandquite expensive, but well worth it.

John R. Watson
Modesto, CA 93555

Strut Maintenance

By Joan Schneier

My Cherokee inhabits a field with a lot of Cessnas and its leaky struts are the butt of some ribbing (but it has the last laugh for smooth roll outs on a grass strip.)

Anyway, since pumping up a strut or two is as much a part of my preflight as checking oil I'd like to pass on a few tips.

Aside from temperature variations, struts go flak due to fluid or air leaks.

Fluid leaks are generally caused by " O ring damage or age and is betrayed by sticky struts (although this may also be caused by a brake leak.)

Piper sells an overpriced " O ring kit which will take care of all three struts, plus a few more which Cherokees do not have. Some of the "O" rings can be obtained from a standard aircraft "O" ring assortment for a lot less. If you have a parts manual, you can order the " O rings individually.

Mains can he worked on fairly readily under a mechanic's supervision. The nosewheel is a lot trickier and should only be attempted by diehard, definitely under supervision.

Pitted struts eat " O rings. If you are not up to the replacement or re-chroming of the strut, J&B Cold Weld

Compound (from an auto parts store) can help fill in tlie pits, at least temporarily.

Pull the strut off and sand it down with fine grit after cleaning it up. Apply the compound as per directions and let dry. Then sand off the excess using progressively finer sandpaper. End with 400 or 600 grit.

If not left to dry too long, the compound readily flakes off smooth chrome while tilling in depressions. A deep pit may require extra coats.

Sand around the circumference of astrut rather than up and down. The final product should feel very smooth. If not, go back to work. Prevent future problems by wiping struts down during preflight.

Keep an oil can full of hydraulic fluid around for adding small amounts to your strut periodically. Add slowly - it foams, especially if slightly dirty. Wipe up any paint eating spills.

With tlie strut fully depressed, tlie fluid should just come up to the bottom of the filler hole.

An even better practice is to raise the strut about an inch, then till to tlie bottom of tlie hole. That way, if you lose your air you still have a slight fluid cushion for landing to prevent damage. With proper fluid level you need a lot less air to inflate the strut.

Many air leak problems can be solved cheaply. Just the core for a Schraeder valve can be bought from Aircraft Spruce & Specialty for a little over a dollar.

A common source of air leaks is the washer under the valve. Aluminum crush washers work OK, but are generally NOT reusable. I have better luck with flat, resistant rubber washers. but have been unable to locate a source. O rings will get you by for a landing or two, but not much more.

The key to adding anything to a strut is getting the weight off that strut. If you have friends, hold down the tail, have them put their weight on top or directly over the horizontal stabilizer spar. Do not let them bang down the stabilizer itself.

Working alone I employ a cheap come-along hooked to tlie tail tie down ring aiid a ground ring. Be sure the mains are well chocked aid the ground tie down is secure.

Jacking mains can be accomplished by having friends lift the wings wing with their backs. i f they stay under the ribs and not the very thin skin.

After struggling for some time with various jack and cribbing combinations (aid also dinging my plane belly). I finally bought a low-wingjack to use aid it comes in handy for replacing tires and greasing wheel bearings. The jack is heavy and bulky: it is not recommended for people with back problems or small cars.

Be careful to jack in calm weather, no higher than necessary, no longer than required, and only one wheel at a time. A slip could be very costly.

It takes about 90 PSI for a nose gear and 125 PSI for a main gear, bare minimum...if the weight is off. You can make a portable air tank for under $20 from a used freon bottle and a conversion kit (from an auto parts store.) Be sure the freon bottle is not too rusty or it may not stand up to high pressure.

The air tauk is handy for pumping up tires on your plane or car. Generally, on a tankful you can pump up one main strut, a nose strut and a few plane tires, if you follow that order.

The valve nests in the wing and is easier to access if you screw on a little tire valve extension before shooting in the air. The extensions do not stand up to hydraulic fluid and may cause leaks if left on too long, but they are cheap. I keep a few in my glove box.

After adding air and letting the plane down, give tlie wheel a sharp kick before deciding to let air out. The strut will usually settle a few inches. You may even have to start over!

If you do let air out, just depress the valve for a split second, then kick the tire. A small amount of air makes a several-inch difference in the strut.

Last, but not least, never unscrew a strut valve without first getting the weight off and then let the air out SLOWLY. Otherwise you will spray hydraulic fluid all over yourself, the wing, and maybe the windows. Even being careful, do not start strut work without plenty of clean rags or paper towels.

When finished, mop up around the wing, strut, wheel and brake blocks; hydraulic fluid is detrimental on the outside of just about everything and attracts dirt.

Finally, check your brake fluid reservoir. It also uses MIL-5606.

STOL **Kit Report**

By Donald A. Champlin

I thought you might he interested in some information on tlie Horton STOL kit from a user.

The flight test sheets are from some performance tests 1 did a couple of months ago. I am not an engineer, doing the tests underrigidly controlledconditions, but I think tlie numbers are accurate.

I operate n~y Cherokee 140E from a 1,400 grass strip that runs uphill toward a ridge and consequently is a one-way operation: land uphill to the west and take off downhill to the east. There is a 50-foot-tree obstacle 200 feet east of the east end of the strip which causes no problems on takeoff or landings.

Bank	Flaps Degrees	Temp. F.	IAS (mph)	Press. Alt.	RPM	Weight
0	0	27	53	3500	850	1730
20	0	27	55	3500	850	1730
40	0	27	58	3500	850	1730
60	0	27	70	3500	850	1730
0	40	27	45	3500	850	1730
20	40	27	47	3500	850	1730
40	40	27	53	3500	850	1730
60	40	27	60	3500	850	1725
0	25	27	45	3500	1500	1725
	25	27	47	3500	1500	1725
	25	27	52	3500	1500	1725
60	25	27	60	3500	1500	1725
0	25	27	40	3500	Full Power	1720

I have operated at MAX GROSS (2,150 pounds) in and out of the strip with no real problems. The catch is I've never taken an unmodified Cherokee into my strip so I do not have much basis for comparison.

Frankly, I am delighted at the performance I get under slow flight and STOL operations. The cruise data seems pretty close to the same numbers for an unmodified bud

Corrosion at Step

By Joan Schneier

I found a corrosion problem today on my 140 which might be of general interest.

My plane has a tubular steel step behind the right wing and, of course, the whole plane is subject to a considerable amount of hot. humid, salty air.

The step got rather rusty and after removing it I found that it had set up a dissimilar metal corrosion cell with the aluminum side of the plane, resulting in some eating away of the skin under the plate. Fortunately, the worst of the damage was confined to a skin overlap, otherwise there might be a hole in the plane bottom by now.

I spent several hours sanding the damage area. sand blasting and finally wire-brushing the step. On no account use steel brushes on aluminum.

Over the weekend I intend to sandblast the worst pits on the plane (if my mechanic agrees), zinc chromate the bare metal, and probably add a thin rubber layer under the plate to further insulate the aluminum from the steel. Plus paint it all to match and replace worn off wing walk compound (that black nonskid stuff on top of the step.)

Anyone who notices a peeling paint problem around their step might consider a look-see before the damage gets expensive. I found one catch, however. The step is held on by six bolts, four of which are screwed into sturdy nut plates.

The other two nut plates were loose and dropped into an inaccessible place, so these two holes will be riveted when the step goes back on. We are talking aircraft quality rivets here, not your normal pop rivets.

A good drag-reducing alternative to most of this work might be removing the step permanently and plugging the bolt holes.

Water Leak At Firewall

By Jim Kaduhr

Several members have expressed problems with a water leak very similar to my own.

After receiving my 1978 Archer II a couple of years ago, I discovered to my surprise the carpeting in the front and right rear would be wet after a rain.

Being a first-time aircraft owner I sought help from local Piper shops. They said check the wing root area, windows and doors. I did several water tests, replaced the weak door seals. and GE siliconed the windows. After a rain - wet floors.

Being desperate I removed the front floor coverings and left front side panel. More water tests. Eureka - the water was entering from the bottom of the firewall.

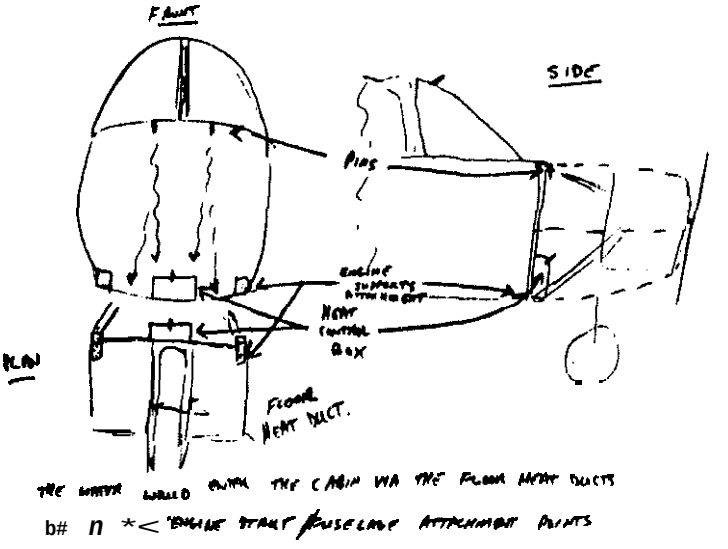

The water was trickling down the gap between the fuselage and the upper engine cowling into the upper cowling rear pin holes and down the firewall to the heat control box and along the bottom lip of the firewall to the engine support attachment points (left and right) penetrating the bottom of the firewall.

Thus the water entered the cabin at the heat control box and the support attachment points.

I caulked the above areas. Water again appeared, but in less quantity. Then, by accident, I discovered that when the cabin/defroster heat control was selected 'ON' water would enter at the heat control box. By turning the selector OFF - no water.

After 16 months the caulking developed a mysterious leak. Needing an aircraft cover I elected to get a custom cover made to include the front of the aircraft over the gap. Through torrential rains and water snows - No more water.

Adds Alternator

By Albert J. LaMere

Mr. E. T. Caskey's letter about converting his 0-320-B2B engine to an alternator system reminded me that my plane, too, was converted.

I helped my A&P do this job and we looked at the alternatives for quite a while before we took the plunge. This is a major change so do not get involved without an A&P to do the work. It is a beast of a job.

We decided the best way to go was straight Piper. We scrounged around salvage yards for some parts and bought most of the parts from Piper dealers.

The Cherokees that were built in 1962 with alternator systems were not basically different from those built

with the old 35 amp generators.

We ordered the brackets for mounting the alternator and they fit perfectly. We also ordered the baffle with the hump in it and installed it with very little trouble.

The alternator, ammeter, overvoltage relay and electronic voltage regulator we scrounged from an aircraft salvage yard. They came from a wrecked Cherokee, vintage 1963. The heavy-gauge wire and the 60 amp circuit breaker came off the wreck, too. We installed a separate on/off switch for the alternator system, too.

When we finished the job it looked like a factory installed alternator system, with the exception that we had left the old ammeter in the instrument cluster. This tells how much we are charging the battery, which is nice to know. The 60 ammeter tells me how much current the system is drawing from the alternator, just like Piper wanted it to do.

The advantage to doing the job this way is that all the components are standard Piper and if some future owner needs to repair the system he does not have to look farther than his Piper Service aid Parts nianuals. It is wired up the way the specs call for it.

If you do the job the way we did it you will be finished with all tlie problems of a 35-amp generator system. You should have plenty of reserve electrical power to care for all the avionics and other goodies that you want to add to your Cherokee.

Since we had tlie plane down for the conversion we decided to switch to a geared starter at tlie same time. We did this without changing the ring gear or its carrier, and it works just tine.

I went through all of the agony that other Cherokee owners in northern climates experience with the direct-drive starters. North of the Mason-Dixon Line, a geared starter is a must if you want to start every time in cold weather.

It helps to use multi-viscosity oil. too. I use Phillips and have been quite satisfied. In the summer, however. I switch back to straight 50W.

For Mr. Cosky's information there is a way to equip his engine with an oil filter. I picked up the adaptor for this at the "Fly Market" at Oshkosh for about $25.00. This is a worthwhile modification. and I recommend it. Since I do not use my Cherokee intensively I change the oil filter at annual time. It is kind of a messy process and I have been unable to get around it.

Strut Leak Cure

By Darrel G. Opicka. DO

I read about replacing of tlie Strut Seal. My airplane, A Cherokee Warrior, was leaking so bad that you could hear and see it leak out.

I got tlie strut seal leak fluid from Sporty's Pilot Shop for $25 (1985) and used it as directed 1-1/2 years ago and it has not leaked since. Much easier and cheaper than to replace the Strut Seal. The kit was very complete and easy to use.

Servicing Your Brakes Part I - Hydraulics

Aircraft brakes are constructed similarly to automobile brakes so you might assume that they were equally reliable. However, make this assumption and you would be completely wrong.

For whatever reason, brake problems are common on light aircraft. Some can be prevented with careful pilot technique, while others will just have to be accepted.

Pilots rarely think of their brakes until something goes wrong. Basically, there are two types ofproblems: those involving a problem with the hydraulic system and those involving the brake disc or lining.

We will discuss the hydraulic system in this article and discuss relining brakes in a future one.

But first, let's take a look at the brake system as it is installed on Cherokees.

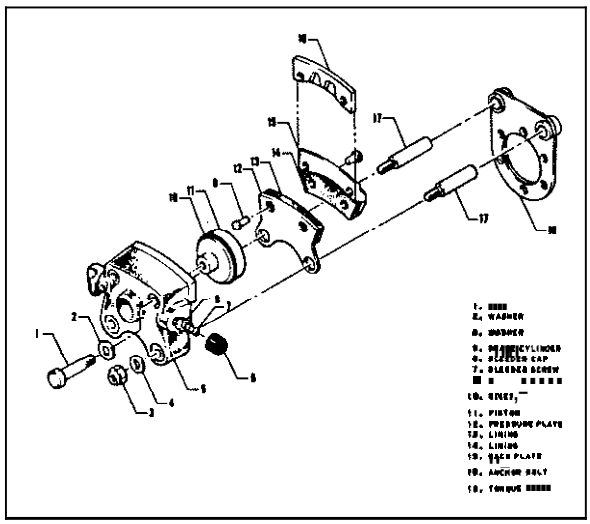

Wheel Brake Assembly

Piper uses the ever popular Cleveland brake system - popular because it is so basically simple. Cleveland brakes, for example, can be relined without jacking the plane or removing the wheel.

The brakes operate when the brake assembly moves in and out of a torque plate (#18) guided by a pair of anchor bolts (#17). The torque plate is attached to the main gear and provides the stationary support for the whole brake assembly.

The linings (#13 & #14) are attached to a steel pressure plate (#12) and a steel back plate (#15). The linings are riveted to these plates.

The brake disc, not shown in the drawing, is attached to the wheel and stops the plane when it is acted on by pressure from the linings.

Hydraulic pressure from the master cylinder pushes the piston (#I I) which then puts pressure on the pressure

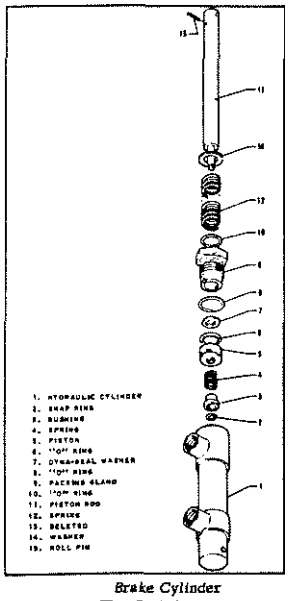

Brake Cylinder
(Toe Brake)

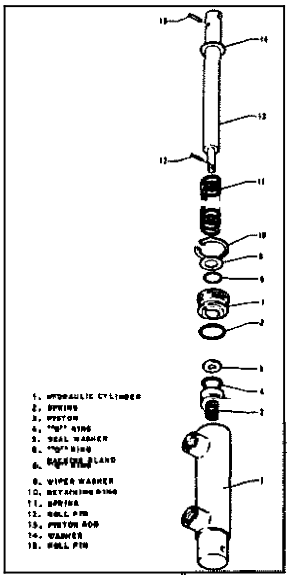

Brake Cylinder
(Toe Brake)

plate. Because the back plate is rigidly attached by through bolts to the brake assembly, it causes the entire unit to center around the brake disc and both linings to apply pressure to the disc.

The brake assembly "grabs" the disc, similar to the way in which a 10-speed bicycle brake caliper grips the tire rim.

The free-floating feature of the Cleveland brake system causes the set of linings to wear evenly - so long as dirt or other foreign substances on the anchor bolt do not prevent the pressure plate from traveling smoothly. When this occurs, the lining attached to the pressure plate will wear much faster than that attached to the back plate and problems will develop.

Let us examine some braking problems and see what can be done to solve them.

Poor Braking **Action**

When the pedal feels normal, but the plane stops poorly, the problem is either linings which are worn or contaminated by a foreign substance, or a brake assembly which is not free floating.

Linings which have completely worn out, or which have actually been lost from tlie aircraft, will cause a grinding sound when braking and will be apparent when you examine the side of the brake assembly. You can see the lack of lining material where the back plate and pressure meet the disc.

Alternatively, the disc material may be contaminated with brake fluid or grease. The brakes may appear OK, but braking action will be very ineffective.

You will need to take the brake assentbly apart to determine whether the lining surfaces are contaminated. If so, they should be replaced and the cause of contamination (such as leaking brake fluid) should be corrected.

Finally, the unit must be free-floating to work properly. To check this, grab the brake housing and try to twist it back and forth. The brake assembly should move enough to show you that the unit is not frozen on the anchor bolts. If the unit is not free, you will need to clean the anchor bolts with alcohol. First, of course, you will have to disassemble the unit by removing the two bolts that hold the back plate to the brake casting. Then, pull the brake unit from the torque plate, being careful not to bend or stretch the brake line.

After cleaning, lubricate the anchor bolts with dry graphite or silicone spray. Do not use oil or grease - these substances on anchor bolts will attract dirt and grit and cause the assembly to freeze up again.

Spongy Pedal

If the plane stops, but only after an alarming amount of pedal travel and with a spongy feel to the system, you no doubt have air in the lines and will have to bleed the brakes.

Tlie Cherokee, unfortunately, has developed a reputation of being a bear when it comes to brake bleeding. Because of the routing of the brake lines it is difficult to remove all air from the system. Nonetheless, bleeding is done the same way as with any other aircraft - it just takes longer and requires more patience.

Brake bleeding will have to be signed off by an A&P mechanic - it is not considered preventive maintenance. Nonetheless, you can do the work yourself (under supervision, of course.)

There are two ways to bleed brakes: the gravity system and the pressure system.

The gravity system involves putting fluid into the hydraulic reservoir and pumping it through the system with the master cylinder. It is not as reliable as pressure bleeding because air bubbles in the system have a tendency to "float" to the top of the fluid against the stream of hydraulic fluid from tlie master cylinder.

You will need a wrench to fit tlie bleeder fitting and some flexible plastic tubing. You will need at least one volunteer to operate the master cylinder on the wheel you are bleeding, and perhaps another to keep the reservoir filled during the bleeding process.

Attach your hose to the bleeder fitting and submerge the end in a container partially filled with MIL-5606 hydraulic fluid (aircraft brake fluid). Crack the bleeder fitting about one-half turn or until fluid passes freely. Have the person in the plane pump that wheel's brake until bubbles are no longer visible in the container.

Now, retighten the bleeder fitting before removing the hose or allowing the submerged end to come in contact with the air. Do not overtighten this fitting, however.

Tlie brake is now bled and you can go on to the other wheel. With a toe-brake installation, each wheel has its own braking system independent of the other wheel.

The other method of bleeding brakes is tlie pressure method and it is considered more precise. It involves putting brake fluid, under pressure, into the wheel bleeder fitting and allowing excess fluid and air to exit the system through the top end (reservoir).

Incidentally, high pressure is not required nor is it desirable. Certainly 20 to 30 pounds of pressure should do the trick without damaging any system components.

Nomially, the process is accomplished using a bleed tankandadaptor which cost approximately $75. This is quite a sum unless you plan on bleeding your brakes a lot. You may be able to borrow this equipment from your mechanic if you are on very good tenns with him.

And at least one mechanic has recommended utilizing a homemade version of the bleed tank, consisting of an oil squirt can (the pumping type) attached to a piece of clear plastic tubing.

The plastic tubing must be filled with hydraulic fluid to eliminate any traces of air. Then the tubing is slipped over the bleed fitting on the brake housing and the fitting is again cracked one-half turn.

A second piece of plastic tubing must be attached to the vent fitting on top of the brake fluid reservoir to catch any overflow and to check for the emergence of bubbles. This tubing, too, is submerged into a partially-filled container of hydraulic fluid.

Now. tlie volunteer in the cockpit must slowly pump the appropriate brake pedal while you add additional fluid to the system through the bleeder fitting. Slowly continue the operation until bubbles no longer appear at the reservoir. When this happens, close the bleeder fitting and check to see that the pedal is hard.

If the pedal is not hard, continue the process again, Otherwise, the system is bled and you can go on to the other side (if necessary.)

When bleeding brakes. be sure no dirt enters the system and be sure that your source of supply of new fluid does not run dry (thereby placing more into the system.)

One problem with brake bleeding is that it is easy to add more air to tlie system than you remove if your technique is sloppy. When you open a wheel bleeder fitting, be sure that it is encompassed in plastic tubing, and only crack it for a moment - to let fluid (and air) out, but not perniit air to reenter the fitting.

When using a bleed tank or a substitute. be sure to purge all air from tlie lines before attaching them to the bleed fitting. Once again, you do not want to inadvertently add air to the system.

Finally. when you are finished. throw away the hydraulic fluid you have removed from the system. It is poor economy to try to save this fluid and possibly cause substantial problems by introducing contaminants to the system.

If this process solves the problem, but the wheel soon becomes mushy again, air is probably being sucked into the system between the reservoir and the master cylinder involved. And if both brakes are becoming mushy, you no doubt have a leak at the hand-brake system.

No Pedal At All

How depressing it is to get into your plane, put your foot on the brake, and feel it go completely to the floor.

This may mean there is no hydraulic fluid in the system at all, but then again, it may not.

True, if there is no fluid in the system you will not have any pedal. You must then determine where the leak occurred, repair it, and fill and bleed the system. You should find a puddle at the wheel, indicating a leaking wheel cylinder. in the cockpit, indicating a defective master cylinder, or along the line from master to wheel cylinders, indicating a ruptured brake line.

But you can have no pedal resistance and still have a coinpletely filled system. Look inside the reservoir first and see whether you have fluid.

Master cylinders have a small seal which normally prevents hydraulic fluid from moving within the cylinder ti-om the pressure side of the piston to the reservoir side. Piper calls this seal, which is actually a small "O" ring, a "Dyna Seal."

Sometimes a small piece of foreign material lodges under this seal and permits fluid to leak through. Or the seal may be tom. When this happens, the piston cannot build up pressure - fluid simply passes the seal and returns to the reservoir.

Unfortunately, replacement of the seal is a complicated process and you will end up paying for a master cylinder rebuild.

The main cylinder "0" ring may also be defective. When this ring goes, the pedal can build up pressure during pumping, but will slowly bleed off fluid when constantpedal pressure is applied. Once again, be prepared to shell out for a cylinder rebuild.

And that about wraps up our discussion of the brake hydraulic system. But that is not all there is to brakes. The most common brake problem is worn linings. And next month we will discuss relining your brakes and we will also give you a few tips on how to keep your brakes working like new with a minimum maintenance cost.

Servicing Your Brakes Part II - Linings

In the last article we took a look at the Cleveland brakes used on Pipers and discovered how wonderfully simple they are. We looked at common hydraulic and mechanical problems which occur and at ways to cure the problems.

But, of course, the most common service which most brake systems will require is relining of the brakes after they have worn past service limits.

Fortunately, this is a simple operation with Cleveland brakes.

First of all, be aware that although most Cherokees come with single-piston brake assemblies, dual-piston planes are not uncommon. The main difference is simply

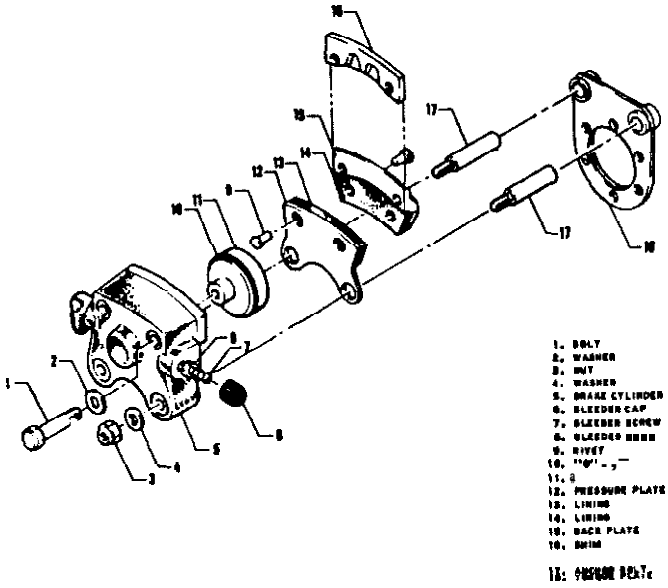

the number of hydraulic pistons used to compress the assembly.

How do you determine whether your brakes need relining? Certainly not from the cockpit. You cannot tell from the braking action.

Aircraft brakes are self-adjusting - the pedal pressure seems fine right up until the point where the rivets holding the linings in place shear off and you have no brakes at all.

To determine whether relining is necessary you will have to perform a visual inspection. For most Cherokees, this is a very simple procedure which can and should be done at each preflight of the plane.

Simply squat down behind each wheel and look at the two linings where they meet the wheel disc. Linings worn below .100 inches or linings which are unevenly worn should be replaced.

You can measure with a ruler, marked in tenths of an inch, or you can use a 3/32 Allen wrench as a guide in determining whether the linings are worn below limits.

Unfortunately, some of the new Pipers with full-fitting wheel pants will not be quite as easy to check. The wheel fairings will have to be removed before you can gain access to the brake assembly and check lining thickness.

Assuming you need new linings you will now find another beauty of the Cleveland brake system. You need not jack up the plane or remove a wheel to get at the brake assembly.

To remove the old linings you need to disassemble the brake assembly by removing the through bolts. There are two such bolts on the single-piston assembly, and four such bolts on models with the dual-piston assembly.

At this point, the back plate assembly is ready to be removed and, quite possibly, has already fallen on the ground if you are not careful to grab it as the bolts are removed.

The brake cylinder housing can now be slid from the torque plate and the pressure plate can be removed from that assembly.

The pressure plate and back plate are the two items to which the linings are attached.

At this point, take the bolts and washers and lightly reattach them. Also, find some way to prevent the brake unit from dangling from its hydraulic line. You are trying to keep from losing parts or causing any damage to components at this point.

Use both thumbs to push the piston back into its cylinder to insure that navel limits are not exceeded while the unit is disassembled which will result in the need to bleed the hydraulic system.

If you have a dual-piston system. be aware that one piston will tend to pop out as you put pressure on the other. Be careful and be sure both are pushed back in without allowing either to pop out.

If you note a hydraulic system leak at this time you will need to have the cylinder rebuilt. Otherwise, no further attention is needed to the hydraulic system and you are ready to reline the brakes.

For this you will need a special brake rivet tool. You can find numerous sources of this item by looking through Trade-a-Plane, but one source which offers the tool for $10, including postage, is United Starline Tool Company, 11119 Cocono, Little Rock, AR 72212.

First you need to remove the old linings. Place the plate-lining assembly face down on a work table and use a 9164-inch punch (or the special punch which comes with the riveting tool) to drive out each of the rivets. Then remove and discard the old lining.

A word of caution here. You will be dealing with the material which will be responsible for stopping your plane. Before handling the new linings, be sure your hands and work area are free of all dirt, grease and other contaminants.

Place the new lining material on the plate and check to be sure the new rivet holes line up with the holes in the plate exactly. Cleveland makes several different brakes which look identical, but which have slightly different spacing of the rivet holes. If the holes are not exact it is time to exchange them for the correct linings.

To install the new lining you must place your brake tool in a vise to hold it securely.

Align the new lining material on the pressure plate exactly as the old lining was attached. Place a rivet through the assembly with the head on the lining and the tail protruding through the pressure plate.

Insert the entire assembly into the brake tool and place the rivet setting punch in the tool. Lower the punch and center it on the tail of the rivet.

While holding the pressure plate firm against the lining, tap the punch with a hammer. Turn the assembly and give it several additional taps to insure that the rivet is evenly set.

Repeat the procedure for the additional rivets. You want to stake the rivets enough so there is no movement

between the plate aid the lining, but not so much that there is splitting of either the rivet or the lining material.

The procedure is then repeated in exactly the same manner for the back plate. And lo and behold, you have successfully relined one brake. Of course, the same procedure will be repeated for the brake on the other side.

You are now ready to reassembly the unit. Use a *dry* lubricant (silicone spray) to lubricate the anchor pins as you get ready to put the unit back. Do not use oil or grease on these pins, as this will attract dirt and almost guarantee the unit will eventually freeze up on the pins.

Put all units back in the reverse order in which they were disassembled. Reattach the through bolts and torque them to 100 inch pounds.

Breaking in **New** Linings

At this point you may assume you are finished, but you are not. At least not completely.

Brake linings must be properly cured to cause a gradual build up of its ability to withstand heat. A sudden hard stop with newly-installed brake linings can ruin them, whether they are automobile or aircraft linings.

Sudden brake application can carbonize new linings causing them to have a much lower braking coefficient with corresponding poorer stopping power.

Cleveland has established a break-in procedure.

Begin a straight line taxi at about 30 mph and then brake to a stop using low pedal pressure (be sure to watch out for other traffic and get permission from ground control if you are at a controlled airfield.) Then let the brakes cool thoroughly.

Repeat this procedure at least five times more to "cure" the brake material.

Be sure to permit the brakes to cool thoroughly between stops. You are attempting to cause the material to gradually become "used to" applications of heat.

Proper break-in is the first step toward long brake life. There are others.

Prolonging the Life of Your Brakes

Have you ever noticed that some people seem to be always relining their brakes, while others never seem to have the need'?

Brake life is largely dependent upon the pilot and there are several things you can do which will dramatically prolong the life of your brake linings.

1. Keep touchdown speeds at proper levels. Every extra five miles per hour on approach is going to have to be dissipated somewhere, probably by your brakes.

2. As much as possible avoid using your brakes on lauding. You do not score extra poults for jerking to a stop and using the first turn off Lay off the brakes and the plane will slow itself.

3. Use your brakes for stopping, not for turning, except when necessary. You fly a Cherokee - not a Cheetah.

4. Be sure your brake anchor bolts are kept clean and permit the pressure plate to travel freely. Periodically lubricate the bolts with dry silicone spray.

5. Keep dirt away from the brake filler reservoir. Dirt is the number one enemy of your brake hydraulic system.

With any luck your plane will now become one of those wonders which never seems to need any work on its brake system. Happy flying.

Shoulder Belt Kit, Inflatable Seal, Door Leaks

By David G. Elliott

I just installed the Piper shoulder belt kit, part number 764-981V. The kit costs $355 plus tax (1985). It contains two lap belts, two inertia reel shoulder belts, mounting channels and gussets to be riveted to the fuselage, screws and rivets, plastic Covers and instructions.

It took me a day to peel back the headliner, fit up the channels and drill the 17 rivet holes on each side (after conferring with the mechanic who signed off the job.)

A half day of bucking rivets for the mechanic and another day to bolt in the belts, put back the headliner, attach the plastic covers over the inertia reels and paint the rivet heads on the outside of the plane. The mechanic's time was four-and-a-half hours.

I have had reasonable success with the battle of the water leaks (thanks for the copies of past articles you sent on the subject.)

The main culprit was the door. I first installed an inflatable door seal from Bob Fields Aerocessories, in Santa Paula, California. The inflatable feature is for noise reduction in flight, but the seal also bas ribs that give a good seal when the unit is un-inflated on the ground.

To achieve the necessary fit, however, I had to build up low spots around the door frame and upper latch area with Bondo until the seal seated everywhere, as evidenced by the seal tightly gripping a strip of paper wherever it was inserted.

I also moved the adjusting nuts on the U-bolt that engages the upper latch to make the top of the door pull down more tightly. By this time the upper door latch was hard to turn, especially with the short lever on the inside. To make it easier to work the upper latch from inside, I machined a new lever that was longer and easier to grip.

There was still a small leak that let water flow inside the door, possibly from the upper latch handle. I drilled a small hole in the bottom front comer of the door, outside the seal, that prevented water from building up inside the door and finally spilling over into the cabin.

Finally, I drilled several 1/8 inch holes through the bottom of the fuselage along the edges of the carpets and at low points under the rear seat. This keeps water from building up from the remaining small leaks. The result of all these measures is a much drier airplane than before.

Lycoming Problem - Rocker Shaft

I purchased my Cherokee last December right after the annual inspection. The aircraft was in great shape and rated an 8+.

The air frame has some 2,610 hours and the overhauled engine 499 hours. Serial number is 28-4262 and the Lycoming engine is a 0-360-A3A. The following story will get your attention, I am sure.

A couple of weeks ago I was running up my engine prior to take off when I noticed my right mag was acting up. 1 immediately aborted any idea of taking off and left my aircraft with my mechanic to fix.

The next day be phoned me to come see something he had never witnessed before which had nothing to do with the mag problem.

One of the shafts holding the rocker arm over the valves had worked its way through the valve rocker cover!

Only a little piece of the rim of the cover prevented the shaft from coming out all together. Upon examination I found the other three valve covers were being slowly worked though by the sliding shafts.

I guess the reason it was not found during the annual inspection is because removal and inspection of these covers is not called for.

Terry, I consider this an extremely dangerous situation. Is there any way to rectify this problem? Who do I contact at the FAA, Lycoming and Piper to bring this episode to someone's attention'!

Tom A. Binford
Winter Springs, FL 32707

Your problem is indeed one which I had not heard of before. 1 have sent copies of your letter to both Piper and Lycoming to get their assessment of the situation.

By now I am sure you have beard from Jim Brown, from Lycoming. Apparently, the problem is not an isolated one.

Service Bulletin Number 400, dated June 4, 1976, was in effect when your engine was overhauled. That bulletin calls for replacement of the rocker arm shafts with models designed to permit the installation of plastic plugs at the end.

The plastic plugs act as buffers and stop metal-to-metal contact between the shaft and the rocker arm cover.

Unfortunately, whoever did your engine overhaul either was unaware of the bulletin or chose to ignore it.

Also, the Lycoming operating manual specifies maintenance on your engine and one item, often overlooked, is that the rocker arm covers should be pulled every 400 hours to inspect for broken valve springs, any damage to the rocker arm assembly, or for anything else out of the ordinary.

Oil Filter Conversion

Previously, Albert J LaMere indicated he bad added a spin-on oil filter conversion kit to his Cherokee 160 with the 0-320-B2B engine.

New, Mr. LaMere has been kind enough to provide more details about the kit. It is available from Wag Aero, P. O. Box 181, Lyons, WI 53148 800-558-6868.

The kit, including an adapter and oil filter, is available from Wag Aero for $49.95 (1985) and will fit Lycoming 0-320 and 0-360 engines.

Gust Damage

By Al DeVore

You might want to pass this on to the membership. My Cherokee enjoyed the end position of the line for a long time. Last Fall we had three nights of gusty winds while I was on a vacation and out of town.

The usual tieback position using seat belts to hold the ailerons and stabilator slipped loose and damage occurred to the cable hinge brackets. Mechanics caught it during the October annual.

Resulting damage to the brackets and aileron hinges cost just under $1,000 - after insurance it cost me $200.

Owners who use this method of securing their plane can check periodically by moving the aileron through its normal travel. If there is a mushy stop or the aileron can be moved a half inch or more beyond the stop, the brackets may have been loosened at the front end by gusty winds.

1 have been told this would also tend to cause some flutter in the ailerons during flight.

Uses Current Weather-stripping

By Gene Kajawa

I mentioned that I had a chronic severe water leak accumulating on tbe right rear seat area to a mechanic at Planemasters at DuPage Airport. He suggested using Piper's current door-sealing method of a fuselage door area weather-strip.

This weather-stripping has a channel which directs the water out of the plane and a hollow-core door seal for the door.

It was the best $60 1 ever spent to date. After a very heavy rain stonn not one drop was in the rear seat area.

Both seals from Piper must be installed on the door and fuselage door area respectively as the old solid-type door weather-strip is not compatible (to fit properly) with the additional weather strip which attaches on the fuselage door area.

This system can be viewedoa later-model Warriors. I no longer must use a chamois to soak up water after a rain storm. I tried various types of foam, etc., prior to this fix, but to no avail.

Power Surge Explained

By Bob Werner

One of the association members previously told of

a 100 rpm power surge which occurred with his Lycoming 180 upon takeoff. He said it only happened once and could never be repeated until the next time he flew.

We had the same situation with our Lyconiing-powered Cherokee 180. We tried everything to avoid the problem, but could find no cure...until after one year when we did little flying.

I prepared the aircraft for a flight to our A&P for an overdue annual and during the preflight I found that one of the cylinders had lost a considerable amount of compression.

The A&P found an exhaust valve frozen in the guide and we had the cylinder rebuilt. Since that repair we have never had arecurrence of the problem with a 100 rpm power jump during departure.

I highly suspect that this particular exhaust valve was hanging up and during full-power operation and heat build up it would suddenly free up and provide full power.

I hope the member finds this helpful. There may be several reasons for the valve failure, that may include valve springs, valve guide tolerances too close and poor lubrication.

Saving Money on Maintenance

By Terry Lee Rogers

Both the regulations as well as practical safety considerations require the pilot to become involved in the maintenance program of his plane.

Pilots can do almost anything on their planes, including rebuilding the engine, if they are under supervision of an appropriate A&P mechanic. The regulations required that the supervisor actually see the work being done to the extent required to insure it is being done correctly. Inspections, however, cannot he delegated.

Tlie appendix to FAR 43 lists, in addition, certain things which a pilot can do on his own on an airplane owned or operated by him and not used in air carrier service.

Any work done by the pilot must be signed off in the logbooks like any other maintenance. The entry must show the description of the work being performed, the date completed, tlie name of the person returning the plane to service, and his signature.

Some specific tips:

1. Grease wheel bearings often where wheels spend time under water, as during a heavy rain. Force the grease through the bearing, don't just slop it on.

2. Battery maintenance is especially expensive if you let it go down. If the battery is down, remove it from the plane and charge it - don't just jump start. It will save damage to the alternator and all the radios. And if your plane sits a lot without use, do not expect long battery life.

3. If you have your airplane painted, beware of acid etch. This is used to remove the old paint and is removed with a high-pressure water hose. This forces the etch behind access panels. Remove all those panels to look for an accumulation of acid. Also, remember that when a plane is painted all control surfaces need to be rebalanced.

4. You can do your own upholstery work. But be sure you buy material from a company, like Airtex, which uses approved fire-retarding material.

5. You can replace bulbs for landing, navigation and position lights, but you can only troubleshoot - not fix - the wiring in the landing light system!

6. Remove and gap plugs every 25 hours where 100 LL isused, and perhaps every 50 hours where unleaded auto gas is used. Use graphite spark plug thread lube to make it easy to replace plugs and to avoid cross threading. Get a good torque wrench - over torquing can ruin a cylinder.

7. Pilots can replace any hose connection except a hydraulic connection, including prefabricated fuel lines, but NOT oil lines. Where oil lines are ragged or where the rubber is stiff, have the lines replaced.

When bringing in a plane for inspection be sure you have done all the preventive maintenance work you can do and have it thoroughly washed before bringing it in.

You may be able to save money and learn a lot about your plane, by taking it to a mechanic who believes in owner-assist annuals. Not only do you save money, but the mechanic should take the time to show you what needs to be done and the correct way to do it.

Decal Removal

By Roy L. Farris

Most decals, including state registration decals, may easily be removed after heating with a heat lamp. The adhesive may then be removed with gasoline.

Annual Ritual

Of all the rites concerned with aircraft ownership perhaps none strikes more fear into an aviator's heart than the annual inspection. And like death aid taxes, there is no legal way to get away from them.

But there are a few things you can do to cushion the shock when you get your bill and still insure that your plane gets as complete an inspection as is desirable.

Shop Around

First of all, the cost of an annual is not written in stone. Different shops have different rates and you can shop around for the best price.

As a rule of thumb, shops at large, metropolitan FBOs can be expected to charge more than shops at rural airports. Also, throughout the country there are variations: the big bucks go to shops in the northeast of the country, white flat rates are lowest in the south central part of the country.

Unfortunately, there are other complications.

Generally, a flat-rate annual is currently the vogue - a shop will give you a certain flat-rate which will cover

the actual inspection - removing inspection plates, researching logs, and actually checking out the structures and equipment.

If annuals were merely inspections, all a pilot would need to do would he to compare the flat-rate quotes, But like most things in life, it is not quite so simple.

On top of the flat-rate, shops will charge an hourly rate, plus parts, for any repairs needed to bring the plane up to standards. So in checking prices, be sure to check this hourly shop rate as well as the flat-rate which is quoted. It is a rare bird, indeed, which can get through an annual without additional repairs being required, and a small difference in hourly charges can offset a large difference in the flat-rate which is quoted.

Try to stay with a shop which regularly works on Pipers. A Mooney or Cessna shop may have some of the finest mechanics around, but if they are not familiar with Pipers, you are going to pay a stiffpenalty as they "learn" your airframe at your expense.

Also, try to stick with one shop for both your annual and your routine repair work if Possible.

When a shop gets a plane to do an annual inspection for the first time, the tendency is to go over the plane with a fine tooth comb and you end up paying for this.

On the other hand, if it is your usual mechanic, he is familiar with your plane and he does not have to check everything as closely. He may not have to spend a lot of time in the tail cone looking for corrosion as he remembers working there earlier in the year. He will not have to spend as many hours checking AD compliance in the logbooks. He bas already done this and is familiar with those which have been permanently fixed and those which can be expected to reoccur.

Researching AD's and handling the paperwork can really run up the cost of an annual. Be sure to discuss this matter with the mechanic before work on the annual begins.

What to Look For In a Shop

If you are planning to go to a new shop for your annual, you need to look at a few things besides prices.

What is the attitude of the mechanic who will be working on your plane? Does he like to work on Cherokees? If he doesn't like them he will be inclined to charge you more.

Check with some of the shop's customers. How do they rate the service? Do they think they have been fairly treated?

Find out in advance what the "flat-rate" quote includes. Does it include oil and filter (which will be part of the annual inspection, but which may get its own additional charge)? What about the IA sign off, Some IAs tack on their $50 inspection fee to the price quoted - a particularly nasty surprise at hilling time.

Eschew any shop which will not agree to call you before undertaking expensive repairs. An extra $200 or $300 in repairs you hadn't counted on can really ruin your day.

Make sure the shop agrees to return the damaged or worn parts to you (unless there is a core charge on the part.) This may help prevent anunscrupulous mechanic from padding your bill unrealistically (although a mechanic, so inclined, can usually find enough such parts in the trash bin to make this technique far from foolproof.)

Owner Participation

A current trend in annuals is the owner-assisted inspection. Many shops are now offering it, although some refuse to permit the owner anywhere near the shop while the annual is in progress.

In the owner-assist annual, the aircraft owner removes the covers, cowls, and fasteners which must come off before the plane can be inspected. The owner removes the battery, drains the crankcase, loosens the spark plugs and does other labor-intensive chores at the direction of the mechanic.

In return, the owner gets a lower price quote on his annual and gets to learn something about airplanes in general and his own plane in particular.

When trouble is found, the owner is working side-by-side with the mechanic and the shock is likely to be much easier to take than when it is presented to an owner at the end in the form of a large hill.

For example, I once performed an owner-assisted annual in my 140 when a bent rear bulkhead was found. Because I was right there, I saw the damage and got to add some input as to what sort of repair should be made. Because I could see the actual damage and gauge its severity and because there was absolutely no question of fraud on the part of the mechanic, it made swallowing the extra $200 for repair much easier.

By assisting in the annual, you should save about $30 an hour for your time. But even without the saving, an owner-assist annual is valuable for the education you receive about the inner condition of your plane.

Keep Up the Condition All Year Long

Preventive maintenance is the key to endurable annual inspections. When glitches are repaired as they develop, rather than saved for repair until annual time, the cost of the annual comes down accordingly.

So what? Isn't the cost of the preventive maintenance going to average out the same as the higher cost of doing the same work at annual time?

Well, yes and no. First of all, if you end up paying a little bit during the year to repair discrepancies, it is a little easier to take than one big whopping bill at the end of the year

And when little discrepancies are allowed to continue, sometimes they develop into much bigger and more expensive problems which end up costing more in the end.

Know Your Charging System

By Robert M. Adkins

Light aircraft charging systems are similar in many respects to theirautomotive andmarine counterparts and are quite simple in nature. There are a couple of notable differences however.

Unlike a car or boat, an aircraft electrical system is controlled by a separate switch (the master), not the engine ignition starter switch. In addition to the battery Master switch a separate switch is provided to allow the charging system of an aircraft to be shut down while still leaving the battery on

This separate switching is the cause for the majority of the problems and the short life expectancy (high failure rate) of light aircraft charging systems. There really is little difference in all of the other parts of the charging system and apart from mechanical problems, electrically an alternator that is used in an aircraft should last just as long (if not longer) than the same alternator that is used in an automobile or boat.

If you have doubts about the statements just made, read on. I think by the end of this article you will find substantial justification for that statement, and proven suggestions that you can use in virtually any light-piston single-engine or twin to extend the life expectancy (and reduce the failure rate) substantially of your charging system. This might just bring a little more peace of mind next time you find yourself in heavy IFR conditions at night near freezing level, not to mention the savings in maintenance costs.

I will explain the function of each of the major components found in an aircraft (and for that matter most all other) charging systems. I will also describe the most common failure of each of the individual components and the symptoms that may be observed. I will show some basic troubleshooting tips for several of the most common charging system failures and the likely causes for each failure.

Please note that I have taken great care to arrange the troubleshooting and parts list in a logical and cost effective order. You may chuckle a little when I suggest that you verify the operation of a switch, circuit breaker or connection, but these checks take very little time and effort to perform and will not cost you anything.

These components do play mayor roles in the charging system. We may not want to admit it, but a lowly switch, circuit breaker or connection can completely disable a charging system. If you don't believe me you might want to reread the tale about David and Goliath and ask Murphy his opinion while you're at it.

Anyway if a problem is found with one of these components they will be the least expensive components to replace. I assure you switches, circuit breakers and connections do fail, especially in older aircraft or aircraft that are exposed to damp or corrosive environments.

If after checking all of these basic parts you conclude that the problem is elsewhere at least you will feel a bit more confident about dropping $100 to $300 on voltage regulators and alternators.

The Major Components

Aircraft charging systems consist of the following major components:

1) Alternator.
2) Battery.
3) Voltage Regulator.
4) Over voltage relay.
5) Battery Master Switch and Master Relay.
6) Alternator Switch.
7) Field and Output circuit breakers.

The charging systems in late model (post 1964) Piper Cherokees and most other light aircraft use relatively standard off-the-shelf automotive parts. Most of the alternators used may be Chrysler, Delco or Prestolite.

The alternator is the business end of the charging system. Alternators typically produce their rated power at

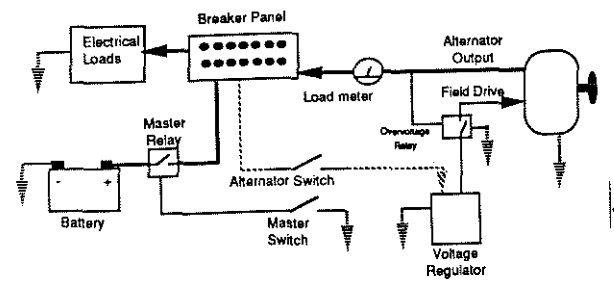

Figure 1. Cherokee (typical) aircraft electrical system

5,000 to *6,000* rpm. In automotive applications the alternator drive is usually reduced 2 to 1 to achieve optimum power output at typical cruise speed engine rpms. In an aircraft installation the drive ratio is typically 3 or 4 to 1. For this discussion I will assume that the alternator is always turning at the optimum rpm which would at any time allow the alternator to produce its maximum rated power.

The Battery and the Alternator

An alternator consists of three basic components, the rotor, stator and rectifier.

The rotor and stator are windings made up of varnished copper wire, the varnish acts as an insulator. The rectifier is made up of six diodes, arranged in pairs. Each pair of diodes rectify the current from each of the fixed phase windings in the stator.

Most alternators do not have fixed magnets and therefore do not produce any power on their own. In effect an alternator is a form of power amplifier; it can turn a small amount of electrical power into a larger amount of electrical power by using mechanical force (the engine drive).

An alternator requires a small amount of external power to produce a magnetic field in the windings of the rotor. The strength of this magnetic field determines the amount of power (current) that may be produced by the stator windings.

The strength of the magnetic field produced by the rotor is controlled by controlling the amount of current that it draws. Most rotor field windings can draw up to 4 Amps.

The output of the stator windings is three-phase alternating current. A three-phase full-wave diode rectifier (two diodes per phase) rectifies the AC voltage produced by each winding of the stator to usable DC voltage.

The battery plays two main roles: it supplies current to the rotor field windings to produce a magnetic field and it acts as a capacitor to both draw and smooth the rectified power (current) from the stator of the alternator.

Alternators are generally very reliable. They do however have one main enemy - beat. Overheating or overloading an alternator will melt the varnish insulating the copper wire in the field windings of the stator very quickly and will also weaken the diodes that make up the rectifier.

With the exception of the bearings that support the rotor the field brushes are the only other part that is subject to wear The brushes are not actually a brush but rather a precisely machined piece of carbon with an imbedded wire and which is quite fragile.

The brushes make contact with the rotor rings to supply current to the field windings. Each brush is held in contact with the rotor ring with a spring. Carbon dust that accumulates as a brush wears can cause it to stick in place and eventually the brush will not make contact with the rotor ring. This is perhaps the most common alternator failure, the second most common is worn out brushes.

Low output power is also a fairly common type of failure. This is usually caused by failure of one or more diodes in the rectifier. An alternator will continue to produce some power as long as at least one pair of the three phase diode rectifiers is still functioning. In such cases replacement of the diode rectifiers usually restores the full output power of the alternator.

The Voltage Regulator and Overvoltage Relay

The purpose of the voltage regulator is to maintain the electrical system voltage to a preset level. The voltage regulator preforms this function by controlling the amount of current that is supplied to the alternator field windings in the rotor.

This device may a be a mechanical relay type unit or a solid-state transistorized unit. Either type performs basically the same function. Most 12-volt system regulators are set to maintain the electrical system voltage at 13.8 volts.

So-called 28-volt systems are a bit of a misnomer since the battery voltage is usually around 24 volts (12 cells instead of 6), however the voltage regulator is set to maintain the electrical system voltage at 28 volts.

Voltage regulators accomplish this task by controlling the current that is supplied to the alternator field windings in the rotor windings and the amount of power that is generated by the alternator stator windings. This is the only function of a voltage regulator.

Solid-state voltage regulators respond faster and more accurately to loads on the electrical system than do the mechanical types and have the benefit of no moviug parts to wear out. There are however two distinct differences in the way these units may fail.

Mechanical (relay type) voltage regulators almost always fail open circuit either because a relay coil or a resistor bums out. In very rare cases the relay contacts may weld closed.

Solid state voltage regulators tend to be of a 50-*50%* type failure - sometimes they short circuit and sometimes they open circuit. I have foundmore short circuit failures than open circuit failures so I tend to lean towards the possibility of a short circuit failure on the solid-state voltage regulators.

Q. What happens when a voltage regulator (mechanical or solid state) fails with an open circuit?
A. No current can be supplied to the rotor field windings which turns off the magnetic field and the stator windings produce no power. The alternator is effectively turned off.

Q. What happens when a voltage regulator fails with a short circuit?
A. Assuming that this is not a catastrophic internal failure which would cause the alternator field circuit breaker to trip) the field windings would be able to draw the maximum possible current and would effectively turn the alternator full on. In this condition the alternator is producing its maxi-

mum rated power. You might think that this is not a problem, but due to rules governing inductors and capacitors an even bigger problem will develop: runaway output voltage. If there is not sufficient electrical load to use all of the available power from the alternator the voltage in the alternator stator windings will rise uncontrollably.

Both of these failures are a problem. The second failure, however, could do potential damage to the radios and other appliances in the electrical system. This is the purpose of that sometimes mystical and poorly understood overvoltage relay.

The overvoltage relay will open the alternator field drive circuit when the voltage in the electrical system rises above apreset point. In 12 volt systems this is usually 15 to 18 volts; in 28 volt systems it is usually 30 to 32 volts.

The overvoltage relay does not cut off the alternator output, instead it cuts off the alternator field drive which effectively turns the alternator off. This device is usually a non-resetting relay.

As soon as the overvoltage relay opens the field drive and the alternator is turned off the electrical voltage will drop back to about 12 volts, however the field drive is not reactivated. Otherwise the electrical system would oscillate in a high-low-high-low voltage condition.

In order to reset an overvoltage relay the alternator (or master) switch must be turned off for a few seconds and then turned back on.

By the way you might find it interesting to know that most automobiles do not have an overvoltage relay. Auto manufacturers don't think that an overvoltage condition is very likely to occur in a car. However, when it does it usually burns out all of the lights. Most other components (fans, heating elements, etc.) will survive the condition.

The Battery Master Switch and Master Relay

The Master switch is actually two switches in one. The left side controls the battery (by turning the electrical system on and off) and the right side controls the alternator.

The battery must be turned on in order for the alternator to be turned on. Turning on only the alternator side will do nothing.

There is one very important distinction that should be made. The Alternator switch turns the voltage regulator on and off. not the alternator output. The voltage to the alternator switch comes from the alternator field circuit breaker which is tied directly to the aircraft battery through the master relay.

The battery master switch handles very little current, usually less than 0.5 Amp, the current it takes to drive the master relay coil. The master relay handles all of the electrical load (including the engine starter) which amounts to 200 to 400 Amps maximum (when starting the engine) and 30 to 70 Amps under normal operating conditions.

The Alternator side of the master switch is a different story. This switch handles all of the alternator field drive current (usually around 2 to 5 Amps). This is a significantly higher load on the switch. Yet this switch has a fundamentally more significant role than the battery side of the master switch.

The condition of the contacts (the contact resistance) in the alternator switch will affect the voltage that the voltage regulator will see. This is where Ohm's law starts to have an effect and this is where just about everyone seems to get lost and misinterprets the symptoms.

Using Ohm's law we can calculate the voltage drop across a resistor based on a specific current. So what does this have to do with a switch? Plenty!

If I could have a dime for every voltage regulator and alternator that were mistakenly replaced because of this switch I would be a very rich man. You see as this switch degrades due to oxidation of the contacts caused by internal arcing when it is switched on and off the contact resistance increases.

Say for example the switch has developed 0.5 (which is very small) ohms of resistance and the maximum current required to drive the alternator field is 4 Amps. What voltage would be detected at the voltage regulator ?

V drop = 4* 0.5 = 2 volts

V reg = 12 volts - 2 volts
V reg = 10 volts

Now the Vreg result is not strictly accurate, however the voltage drop across the alternator switch is.

That means that the voltage regulator will see two volts less than the rest of the electrical system when four Amps is flowing to the alternator field.

A more accurate way to look at this is to say what voltage the rest of the electrical system is at.

With the voltage regulator preset to maintain a 13.8 volt level, then the rest of the system is at 13.8 volts + 2 volts or 15.8 volts when the regulator is seeing 13.8 volts!

This insidious problem only gets worse since the resistance in the switch causes it to heat up and further degrade the contacts. You may be surprised to know that this same 0.5 resistance at 15.8 volts and 4 Amps must dissipate 8 Watts of power!!! This may not seem like a lot but we are taking about a device that is not designed to dissipate heat.

Most of the time when a switch gets this bad it starts to act like (you guessed it) a Christmas tree light. As the switch contacts heat up the metal warps and the contacts open, the contacts cool d o and make contact, the cycle repeats and presto, Santa is coming to town.

The result is a charging system that is being turned on and off (just as if you were flipping the switch) and the result is a fluctuation Ammeter (load meter).

A second type of failure will also produce the same result. If the switch contact resistance increases significantly the voltage regulator may not be able to flow sufficient current to the alternator field before the voltage drops below the point at which the voltage regulator will operate.

When the voltage drops too low the voltage regulator turns off and stops flowing current to the alternator field. This allows the voltage level to return to normal, at which time the voltage regulator turns back on and the cycle repeats.

Once again you're flying a blinking charging system, except in this case the rate at which the system turns on and off, (fluctuates) will usually be very rapid (more than once a second).

I have to say that I know some very competent aircraft mechanics whom I trust and respect very much when it comes to mechanical work. I must admit through I wouldn't let them wire the lights on a Christmas tree let alone troubleshoot (at my expense) the electrical system on my aircraft.

I am frankly amazed at some of the bizarre suggestions I hear or read about on electrical systems on light aircraft. They are about as accurate as saying that the Earth is flat and the Sun revolves around the Earth.

The Ammeter (Load Meter)

Last but not least is the Ammeter (sometimes called the Load Meter). In some airplanes (and cars) the Ammeter shows the charge and discharge state of the battery.

In Cherokees the Ammeter shows only the charging current (the alternator output). Under normal conditions this charging current is equal to the electrical load on the system and this is why the Ammeter is a Cherokee is sometimes caller the Load Meter.

Keep in mind though that the Ammeter in a Cherokee only shows the output of the alternator. If the alternator is off line (turned off or broken) the Load meter will read zero.

Obviously one must assume that there will still be an electrical load that will continue to drain the battery unless the Master switch is turned off.

The Charging System

OK, now you know what all the major components of the charging system are and how they function, lets put it together. Figure 1 shows the most typical aircraft electrical system and is an accurate depiction of the electrical and charging systems in the Cherokee.

Note the dashed line between the breaker panel and the voltage regulator with the Alternator switch in the middle. This line provides three functions:

1) Power for the voltage regulator's internal circuits.

2) Voltage sense of the electrical system.

3) Power (through the voltage regulator) to the alternator field drive (rotor windings).

Poor connections in the line can wreak havoc with the charging system. Many hundreds of dollars have been spent replacing perfectly good voltage regulators, alternators, overvoltage relays and who knows what else in an attempt to cure the "fluctuating" alternator output. 99% of the time it is aproblem in this line. Most of the time it is simply a faulty or worn out Alternator switch, typically a $10 part.

If there is a problem in this line that limits the current that can be drawn by the voltage regulator (and the altemator field drive) several things will happen. When the voltage regulator senses a low voltage condition it attempts to provide more current to the alternator field.

The more current that flows through this line the greater the voltage drop that occurs; the more the voltage drops in the line the more the voltage regulator attempts to provide to the alternator field. This vicious cycle continues until either the alternator is turned on full (and potentially causes an overvoltage) or the voltage drops so low that the voltage regulator can no longer function and shuts down.

As soon as the voltage regulator shuts down the current flow to the alternator stops and the voltage on the line increases. When the voltage increases enough to operate the voltage regulator the whole cycle repeats.

The pilot sees a rapidly (usually more than once a second) fluctuating Amp (load) meter as the charging system turns off and on like a Christmas tree bulb.

The first thing most mechanics will do is to take the system apart, suspecting a faulty alternator or voltage regulator. Unfortunately this is the beginning of the expensive route to failure.

Why suspect a switch? Or a circuit breaker?

Few people realize the thousands of times that the master and alternator switch is turned on and off in the lifetime of an aircraft Each time that switch is turned on or off a small amount of internal arcing occurs. This arcing degrades the metal in the switch contacts and gradually increases the resistance across the contacts.

This usually does not cause a problem for the battery side of the master since the actual current is carried by a remote master relay. The increased resistance across the alternator portion of the switch will cause problems. A contact resistance of a mere one ohm will cause havoc. As the voltage regulator attempts to provide more current to the alternator field the one ohm resistance in the switch (or anywhere in the line) will cause the voltage to drop one volt for every one Amp of current drawn by the voltage regulator and causes it to provide more field drive current than is required to maintain the correct system voltage level.

In the early stages of this problem there are may be a tendency to overcharge the battery and increase the overall electrical system voltage or may even cause the overvoltage relay to trip, leading to the incorrect suspicion of a failed or failing voltage regulator.

The output of the alternator goes to the alternator output breaker and is connected to the aircraft electrical bus. The load meter is placed between the alternator output and the circuit breaker to show the current flow into the aircraft electrical bus.

One of the reasons that the load meter AD was of

so much concern is that if the stud on the back broke off and the alternator output was grounded out behind the panel it would occur before the alternator output circuit breaker and could be a fire hazard.

I am sure that many members have seen the ridiculous solution from Piper for the Load meter AD. I personally feel less safe with the Piper AD solution than with the original problem.

That is all there is to the Cherokee charging system. It is really quite simple. The charging system design on the Cherokee is virtually identical to most other charging systems in light aircraft, whether it is a Cessna, Mooney or Beechcraft.

As simple as these charging systems are, the problems that occur are often blown way out of proportion. I have watched qualified mechanics laboriously take apart an electrical system before they even checked to make sure the Alternator field circuit breaker was working.

Of course the airplane owner is paying for their time (and the parts). I have also heard the war stories from aircraft owners who troubleshoot and service their own aircraft.

Most of these expenses can be chalked up to a misunderstanding of the charging and electrical systems.

Lets examine some typical failures:

Symptom: Battery not being charged at all. No alternator output.

1) Check alternator drive belt for correct tension.
2) Verify that the Alternator switch is on.
3) Verify that Alternator Field breaker is not tripped.
4) Verify that Alternator Output breaker is not tripped.
5) Verify that alternator field drive has voltage.
6) Verify the voltage regulator input voltage.
7) Verify that the overvoltage relay is not open.
8) Verify voltage at Alternator Field circuit breaker.

Likely problems are:

√ Open circuit voltage regulator failure.
√ Faulty Alternator Field circuit breaker.
√ Stuck or worn out rotor brushes.

Symptom: Some charging is occurring, not enough to support electrical load. Battery dies after a short time.

1) Check the alternator drive belt for correct tension.
2) Remove alternator and perform output power test. (Most reputable automotive parts shops can safely perform this test).

Likely problems are:

√ Loose or worn drive belt.
√ Partially failed diode rectifier (One or two phases).

Symptom: Alternator shows a substantial charge rate and then trips off. Alternator Output breaker does not trip. Upon resetting the Master (or alternator) substantial charge is indicated and alternator trips off.

Likely problems:

√ Voltage regulator failure. Short circuit type
√ Faulty Alternator Switch.
√ Faulty Alternator Field circuit breaker or connections.

Symptom: Fluctuating alternator output relatively rapidly, one or more times a second.

1) Check the alternator drive belt for correct tension.
2) Verify that no heavy loads are being switched on aud off. (Such as landing gear retraction motor, landing/nav lights, pitot heat etc.)
3) Verify all connections between the Alternator Field circuit breaker and the alternator field drive connections.
4) Check rotor brushes (if fluctuations are very rapid and vary with engine rpms).

Likely problems:

√ Faulty Alternator Field circuit breaker
√ Loose/bad connection(s) between alternator field circuit breaker and alternator field drive connections at the alternator.
√ Faulty/intermittent overvoltage relay.
√ Faulty voltage regulator

Symptom: Fluctuating alternator output relatively slowly, once every few seconds.

1) If retractable, verify that high pressure accumulator is not leaking. (This causes hydraulic pump to activate every few seconds to keep landing gear up).
2) Verify that no heavy loads are being switched on and off. (Such as landing gear retract motor, landing/nav lights, pitot heat etc.)
3) Verify all connections between the Alternator Field circuit breaker and the alternator field drive connections.
4) Remove alternator and perform output power test. (Most reputable automotive parts shops can safely perform this test.)

Likely problems:

√ Heavy load switching on/off (lauding light, pitot heat, landing gear retract motor).

√ Faulty Alternator switch (right side of master switch).

√ Partially failed diode rectifier. (Temperature sensitive).

√ Faulty overvoltage relay.

√ Loose connection between Alternator Field circuit breaker and alternator field drive connections.

√ Faulty Alternator output circuit breaker.

Loose/bad connection between alternator output and alternator output circuit breaker.

The above steps should be performed in the order shown in order to examine the simplest items first. Keep in mind that simple parts can and do fail. In fact if your airplane is more than 10 years old or has more than 2000 hours on the airframe I would suspect the switches and circuit breakers before any of the active components. Switches and circuit breakers that are old sometimes just fall apart internally.

Finding the problem

So now that you have all of this wonderful information, how can you check your charging system? Actually you can check out 80% of the system quite easily with one piece of common test equipment; a hand held voltmeter (sometimes called a VOM or a Digital Multimeter, a DMM).

All of the voltage measurements can be made without the engine running, just with both sides of the master switch on.

When the engine is not running the alternator is not producing any output, therefore to test the alternator output I recommend that it be removed from the aircraft and bench tested. This is the most effective method for troubleshooting the alternator.

Removing the alternator on most aircraft requires a significant amount of work, therefore I recommend that you perform as much testing as possible with the alternator in place.

Since a voltage regulator is set to maintain the electrical system voltage at a higher voltage than can be produced by the battery when the electrical system (both master and alternator switched on) is on and the engine is not running, the charging system is fooled into thinking that a low voltage condition is present.

As a result the voltage regulator will usually be turned full on (sourcing the maximum current to the alternator rotor field). This condition will benefit your troubleshooting efforts since it represents the worst case scenario of maximum charge rate (if the engine were running).

Check the Battery

Before measuring any voltages first make sure that the aircraft battery has been fully charged, has the correct amount of fluid in each of the cells and has clean battery posts with properly secured connections to the posts.

To measure the voltages at the various points in the charging system, connect your VOM or DMM negative (black) lead to secure ground point on the airframe. A secure ground point should be a structural member where a connection to bare metal can be found. Ideally you would like to connect your VOM negative lead directly to your battery negative post this is usually not practical (especially in most Cherokees).

Everything is relative. Establish a reference.

The first step is to measure the reference voltage to which you will compare all of your other measured voltages. With the electrical system on measure and record the voltage on the buss bar behind the circuit breaker panel.

The buss bar is a piece of metal that is found behind the circuit breaker panel in your aircraft. All of the circuit breakers are usually mounted to one leg of this bar.

This voltage will be your reference voltage and should be 12 (or 24) volts, plus or minus 0.5 volts. If this voltage is too low there may be a problem with the battery or master switch.

Check the Voltage Regulator sense line

Measure the voltages at all of the connections in the line between the Alternator Field circuit breaker and the voltage regulator. The measured voltages should be, plus or minus 0.1 volt of your reference voltage.

If a lower voltage is measured check the part and or connection in question. For instance if you measure 12.0 volts at the input side of the alternator switch and 11.2 volts on the output side there is no question that the switch is faulty and should be replaced.

Verify that the Voltage Regulator is grounded.

Once the voltages on the line that feeds the voltage regulator have been measured the next step is to verify that the voltage regulator is properly grounded. This step is usually overlooked.

An improperly (or poorly) grounded voltage regulator will have you chasing a flock of wild geese. Checking the grounding of an electronic voltage regulator is simple. With the electrical and charging system on and your VOM negative lead connected to a secure ground, simply measure the voltage between the case of the regulator and ground.

Do not use the transistor (usually mounted on a heat sink on the outside of the case) as a measurement point.

There should be no voltage measured. If there is any measurable voltage the regulator in not property grounded.

For the old mechanical style regulators, simply select the Ohms (R x 1 if your meter has it) scale and measure

the resistance between the case of the regulator and the airframe. There should be no resistance.

Of course you should check to verify that the regulator is properly secured and that there are no loose mounting screws.

Check the Alternator Field drive

Next task is to measure the voltage from the regulator to the alternator field. The engine should not be running. Measure the output voltage from the regulator. Be careful not to short the voltage regulator output to the airframe as this will destroy the regulator! The output voltage should be approximately one volt less than the input voltage. If there is no output voltage the regulator is no good. If the output voltage is very low (only 1 to 5 volts) the regulator is marginal and should be bench tested.

Next measure the voltage at the alternator field counection. There is usually only one wire running to the field of the alternator. The other side of the alternator field is usually grounded to the case.

The large wire on alternator is the output line. Measure the voltage on the small wire going to the alternator field. Again, be careful not to ground the field drive line as this will destroy your voltage regulator! This voltage should be within 0.1 volts of the output voltage measured at the regulator.

If the alternator field drive voltage is low a faulty line or connections should be suspected.

Check the Alternator Output

Next measure the voltage at the output line of the alternator. This voltage should be within 0.1 volts of the reference voltage measured at the buss bar. If the voltage is low a faulty line or connections or circuit breaker should be suspected.

When everything checks out OK...but isn't

There are bound to be those systems that check out perfectly when measuring all of the voltages as I have described but still don't work right. In these cases I recommend taking the tune to remove the alternator and have it bench tested to ensure that it is operating properly.

Once this check has been performed satisfactorily you have eliminated one of three active parts in your system (and usually the most expensive) from being the cause of the problem.

The last two remaining active parts are the voltage regulator and the overvoltage relay. How can you check them?

Well earlier we measured the input and output voltages without the engine running and were satisfied with the readings. Now we will perfonn the same measurement with the engine running. Secure the aircraft to a tie down and set the brake.

Connect your VOM negative to a secure ground (airframe) and the positive lead to the voltage regulator input. Start the engine and set it to approximately 800 rpm.

Note the voltage reading on your DVM. If it is 13.8 to 14.2 volts and is steady your first step is complete.

Now measure the voltage at the main buss bar (the same place the reference voltage was measured earlier). Verify that it is within 0.1 volts of the voltage reading at the input to the voltage regulator and should be within 13.8 to 14.2 volts.

If this is not true suspect a faulty connection between the buss bar and the voltage regulator input, most probably a high resistance connection or switch.

If your system is not charging but the alternator bench test checks out OK perfonn the following tests. Measure the voltage at the Alternator Output circuit breaker. Make sure that the voltage reading on both sides of the 'ircuit breaker is the same. If there is more than a 0.1 volt difference the circuit breaker should be replaced.

Measure the voltage at the output of the voltage regulator. Turn on the landing lights and pitot heat. Verify that the voltage regulator output voltage increases more than 1 volt.

Measure the voltage at the input side of the regulator. Verify that the voltage is still 13.8 to 14.2 volts. If not then suspect a faulty regulator (this assumes that your alternator has passed a bench test).

If your alternator output is fluctuating check for a fluctuating input voltage at the regulator. If the input voltage is going below 10 volts suspect a faulty regulator sense line, switches or connections.

One way to verify a fluctuating charging system is to use small jumper lines and jump across the Alternator circuit breaker (only temporarily for ground testing!) and Master Alternator switch.

If the fluctuating stops, your problem is in either the switch or circuit breaker or perhaps both. And of course. check the connections. If when the Master Alternator switch and circuit breaker are jumped the fluctuations don't stop make sure that there is no load being switched on and off.

Finally check the overvoltage relay connections and grounding. Make sure that the relay is properly secured.

Measure the voltage across the relay connections. The reading should be 0 volts.

If there is more than 0.2 volts across the overvoltage relay terminals or it is fluctuating, consider it to be defective and replace it. Generally speaking overvoltage relays are inexpensive items. They are also very reliable, but they do deteriorate with age.

Fluctuating Current Demands

You may be surprised at the number of things that may turn on and off unexpectedly causing a fluctuating ammeter, yet the charging system is working fine. In fact it is doing the job it was designed to do.

Rotating beacons (that are near the end of their lives), some transponders, landing lights (with bad connections) and, yes, pitot tube heaters and landing gear systems can all tum on and off unexpectedly.

The most impressive case I have heard about (and perhaps the most common to retractable gear aircraft) is the landing gear pump problem.

A friend of mine with an Arrow was chasing the elusive fluctuating alternator, he tried everything. I tried to slow him down, hut he had it figured out each time. I must admit I didn't quite know what the problem was myself but I did suspect a heavy load switching on and off.... I just didn't know what it could he.

The tip-off should have been when he said "... everything checks out fine on the ground.. It doesn't start acting up until after 1 take off" The problem was ultimately found during the next annual.

With the gear retracted after about five minutes the gear pump would reactivate for a second or two. Thereafter, every minute or two this would occur.

The problem turned out to be a had O-ring in the high pressure accumulator, however the total cost was a new alternator, regulator, over-voltage relay and hours of frustration.

Remember Murphy likes airplanes too.

Making your *system last...*

So you don't have any problems and hope you never will. Well, perhaps if you follow these two simple suggestions you may never have a problem, or at least you will reduce substantially the chances of having one.

Have you ever asked yourself why the charging systems in aircraft fail so often. In reality the charging systems in aircraft should last longer than their automotive counterparts.

Why, you ask? Well consider that the alternator in a car is subjected to far more engine starts (requiring a heavy charge at low rpm), often has to sustain a heavy load during engine idle on hot days while you're stuck in traffic with the air conditioner running full blast. They have to operate in heat conditions that are well above 200 degrees F with poor ventilation.

Usually the alternator is mounted near the bottom of an engine and is subjected to repeated water drowning (complete with road grime and dirt) when driving in the rain. The alternator (and regulator) in your car is subjected to all of these things and yet easily survives 10 years and over 100.000 miles.

I can honestly say that I have never seen a Chrysler alternator fail electricallv in anv vehicle or marine application either in my own vehicle or somebody else's. The one in my car (a 1964 Plymouth Valiant) has over 200,000 miles on it and is over 10 years old. Ditto for the pickup and the station wagon.

This is the identical 60 Amp alternator installed on many Cherokees, the only difference being a little sticker that says "FAA-PMA Approved.

I have seen Chrysler alternators fail mechanically, the diode packs have fallen out or the hearings have seized but not electrically. So why does everyone curse their Chrysler alternator?

Probably because it was the alternator that was installed in the airplane. Talk to a Beech or Cessna owner and they probably don't have much good to say for Delco or Prestolite Alternators either.

The alternator in an aircraft is operating in a nearly perfect environment, this being relatively constant speed, constant load, low overall load, high rpm (best cooling and efficiency) in a fairly cool and relatively well ventilated space that rarely if ever gets wet and never sees road grime. The big question is why do they fail so much more often? The one main reason is overloading and the second is simply the design of the charging systems in light aircraft.

Often the alternator and voltage regulator have not failed, simply a switch or circuit breaker has become faulty. Why does this not happen in a car? Read on and find out.

Don't Overload the System!

You might say, "I can't overload it". And I will say "You do it every time you start your airplane!

Yes folks that's the sad truth and probably the main reason aircraft charging systems have such a high failure rate! Yet there is a very simple thing that you can do that does not require any modifications to your aircraft whatsoever.

The two simple steps are:

1) Turn the Alternator switch OFF BEFORE starting the engine!!

2) Tum the Alternator switch ON AFTER the engine is running!!

What few people realize is that this same process occurs automatically when you start your car or boat or virtually any other machine with a charging system. This function is performed automatically by the ignition switch in your car if your car has an automatic transmission or manual transmission with a neutral safety switch).

Set the hand brake (or put your foot on the brake). Put your transmission in gear (any gear). Tum your ignition on, tum the radio or heater blower on (an accessory that works only when the ignition is on). Now, try to start the engine.

No, the engine does not start (the starter will not engage on those cars equipped with a neutral safety switch) Notice however that the radio and other accessones that were active with the ignition switch on turn off when the ignition switch is in the start position!

The switch is also cutting off the power to the voltage regulator (and shutting down the alternator) white the car is being started.

You may not have noticed all of this happening when

you normally start your car and that is why I suggested that you place the car in gear to prevent it from starting so that you can take notice of what happens when the car is being started.

In an aircraft the alternator is usually turned on at the same tune the Master switch is turned on. This applies full power to the alternator field since the voltage regulator is sensing the battery voltage (which is less than 13.8 volts).

You then start the engine using the ignition switch. During the start power is available to the alternator through the voltage regulator.

As the engine is being started the alternator is turning fast enough to produce some power, however at the same time the starter is drawing 200 to 300 Amps.

Most alternators can only sustain 60 to 70 Amps, 200 to 300 Amps is equivalent to a dead short on the output of the alternator. In this situation the alternator is being substantially overloaded. The part most likely to eventually fail will be the diode rectifier.

Listening to the Radio...

Have you ever noticed how fast an aircraft battery seems to run down when you are just sitting in the airplane listening to the radio. All you have turned on is the Master and one or two radios and in an hour or two you end up with a low battery, right?

Sure the turn coordinator is *running* but electric gyros don't draw that much current, the radios certainly don't either.

Most radios draw less than one Amp in receive mode. If you have atypical 35 amp hour battery you should have plenty of reserve. Yes all of this is true except one thing is missing -usually when you turn on the Master switch you turn on both sides of the Master (the battery master and the alternator switch).

So now the voltage regulator is on and providing up to four or five Amps to the alternator field in a vain attempt to generate some power and raise the electrical system voltage to 13.8 volts, but that won't happen because the engine is not running... right?

So if you want to sit in your airplane and listen to the radio for a while, or anytime you turn on the Master, don't turn the alternator on with the engine not running! It won't do you any good, it will drain the battery and, if you subsequently start the engine, it will overload the alternator during the engine start.

Remember...
Engine Stopped - **Alternator OFF**
Engine Running - Alternator **ON**

Chances are if you follow these two simple steps your charging system will last much, much longer, plus you will have the added benefit of not inadvertently running your battery down.

One last thing to remember: if you do adopt these suggestions remember to turn the alternator on after you start or you may find yourself with a dead battery in flight.

Above everything else, have a safe flight...

Door Latch Leak

by Ted Stanley

A customer and friend of mine managed to find an elusive leak in his Warrior. It was coming from the top latch on the cabin door. The leak was found by sitting in the plane during a rain storm.

The strange part of it all was that although the floor was soaking wet the front seat remained bone dry.

I installed anew seal on the latch and the leak disappeared. Just thought the members would be interested.

Radio Diagnosis Ideas

Many times radio troubles can be traced to problems with transceivers other than black box failure.

How many times have you taken your communication radio to an avionics shop with the complaint of weak reception or transmit and nothing was found wrong?

Don't give up. The radio is only half of the system. The aircraft is the other part.

Check the coaxial cables and BNC connections for shorts or opens. Beware that coaxial cable has a definite life span. Outside factors, such as water, humidity, heat or cold will affect the dielectric constant of the cable. This will cause high S.W.R. on the line resulting in limited transmit or reception range. Also, do not forget the antenna itself.

The fiberglass antennas have a loading coil in their base as opposed to the bent metal rod type which can become defective on occasions. Also, make sure the antenna is bonded to the aircraft's metal skin.

It is important to remember that aircraft radios use a one-half wave length and the metal skin, acting as aground plane, comprises the other one-quarter wave length.

If you have spent $2,000 plus for a new radio do yourself a favor. Install a good fiberglass antenna and coaxial cable. Do not operate it on a bent metal rod.

The metal rod was cut to length for the early 90 channel radios, not for the late model 360 to 720 channel units. What good is a new 1985 radio on a 1960 antenna system?

Finally, check your hand mike or headset mike. The carbon types are prone to decreased sensitivity when the carbon granules become compacted due to humidity and moisture.

Wants Quarter Inch Windshield

Can you tell me where to buy 114-inch windshields (two pieces)? I was told a 1/4-inch does not fit right in the molding.

I have a 1967 140 OT (old and tired).

Roaul Somers
Warrenton, MO 63383

Quarter inch windshields are available from Fullerton Air Parts, 4010 W. Commonwealth Ave., Fullerton, CA 92633 (800) 327-1171. The windshields list for $87 each (1986), $14 more than for a standard eighth-inch windshield. A bronze tint windshield is available for $120 each.

Prices for PA-32 windshields are only a little bit steeper - standard 1/8 inch windshields are $97 and, for some reason, bronze tint is *not* available.

The quarter-inch windshields do not fit perfectly into the windshield molding - they are an extra eighth-of-an-inch thick, after all. The moldings are easily repositioned and fastened, however, and it is difficult to tell the installation is not the same as done by the factory.

Converted Old-Style Door

By Albert J LaMere

This is a response a previous letter regarding the old-style door on a 1962 PA-28-160.

When I bought my 160, S/N 64, in May, 1977, it too had a sliding latch safety catch and I had all the problems with that door that were mentioned in that letter.

I took my plane to the Hobart. Indiana Skyranch Airport in June, 1977 and they installed the new-type latching mechanism in my existing door and air frame. As I recall, they ordered the parts from a Piper distributor and installed them. The job was not an easy one as the headliner had to be lowered and there was riveting and drilling and cutting that had to be done.

The job was done just the way the factory has been doing it ever since they began using this latching arrangement. When the Skyranch people were finished it looked as though it was original work.

I have forgotten the cost, but it was not cheap. This is a good example of the old saying about "The quality of the work is remembered long after the cost is forgotten."

I do not recommend anyone buying a new door. In fact, an aircraft owner is probably better off from a fit standpoint staying with the existing door. As I remember it was the door that was the easiest to modify. It was the airframe that was the challenge.

While I am at my trusty word processing terminal 1 would like to share with our membership an experience I had this fall with my Airborne vacuum pmnp that cost me a bundle, and was due to my own ignorance.

While my A&P was doing the annual on my Cherokee I was helping with the grunt work. We decided to wash down the engine before putting the cowling back on, and I proceeded to spray cleaning solvent on the inside of the cowling and across the engine (with gusto, I might add.)

Since we had a little oil weeping from around the vacuum pmnp I gave it a good shot, top, bottom, side, all around. When I finished it was clean as a whistle.

Shortly thereafter we put the cowling on and fired up the engine. Oh boy! The squealing from the vacuum pump could be heard for half a block.

I had inadvertently sprayed solvent into the overflow tube of the pump. From this experience I think I now know why some people have problems with vacumn pumps not lasting to their normal 300 to 500 hour useful lives. Contamination of one sort or another is probably the cause. Oil, dirt and solvent are probably the chief culprits.

The moral to this story is to cover your vacuum pump and its exhaust tube, your alternator and your magnetos with Glad Wrap or aluminum foil before washing down your engine. Also, keep oil away from the drive shaft of the vacuum pmnp. It will contaminate the carbon bearing and cause it to seize on the drive shaft and eventually shear the plastic coupling.

All About Your Carburetor System

By Terry Lee Rogers

Chances are you spend very little time thinking about your airplane's carburetor. Yet it is the heart of your engine. There are a few things whicheverypilot shouldknow about his carburetor.

The Piper aircraft fuel system schematic is shown in Figure 1. Simple gravity feed is used, with an electric pump backup for takeoffand landing operations. It also supplies pressure in emergencies to reduce vapor through lines, thereby preventing or eliminating vapor lock.

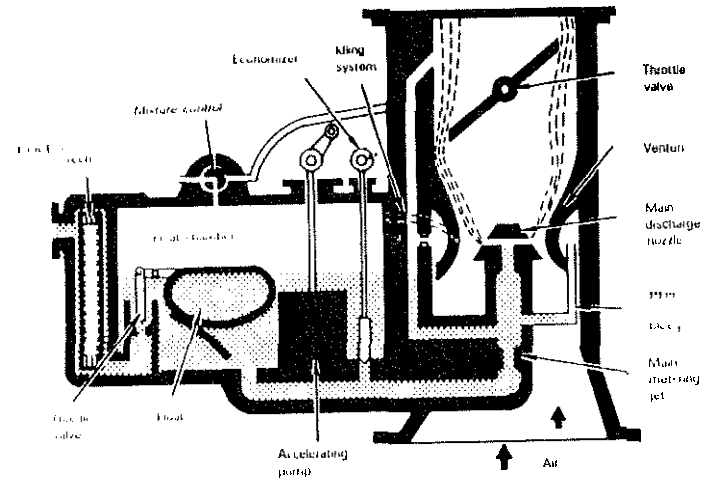

The actual layout of the fuel system in the plane is no accident. Fuel lines are located away from sources of heat to avoid vapor lock; steep rises and sharp bends were also avoided by the system engineer.

The basic function of the carburetor is simple: it must meter fuel in proportion to the air to establish the proper fuel-air ratio to permit the mixture to be burned, and it must do this at all altitudes and under all weather conditions.

This is not a simple task, but the float-type carburetor used on your Cherokee does it remarkably well. The carburetor consists of three main units: an air passage through which the engine draws its air-fuel supply, a device to control the amount of fuel admitted to the mixture, and a method

of regulating the amount of fuel-air mixture actually delivered to the engine cylinders.

Let's take a look and see how a carburetor actually performs.

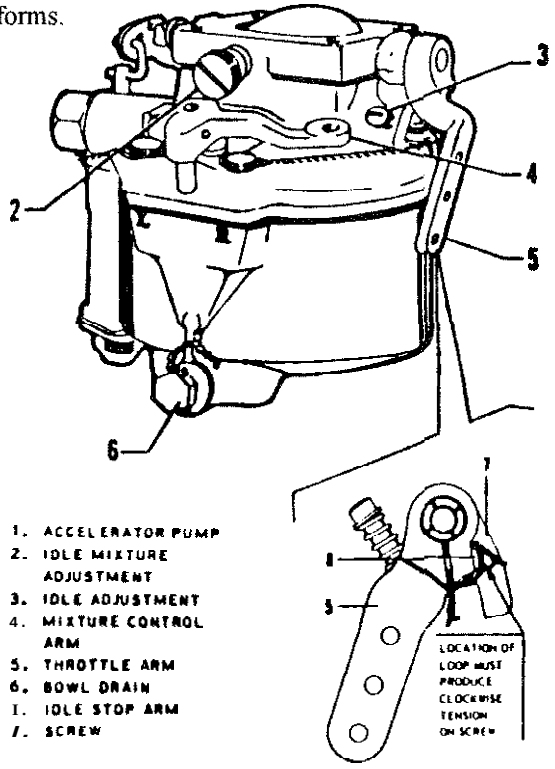

TIGHTEN THROTTLE ARM SCREW (8) TO 20 - 28 IN. LBS. TORQUE

As we see in the schematic diagram, fuel enters the carburetor past the fuel screen into the float chamber, The float chamber is designed to supply a constant level of gasoline to the main discharge nozzle.

With the level of fuel constant. the amount of fuel which flows through the main discharge nozzle is determined by the velocity of air through the carburetor. Incidentally, note the small vent at the "mixture control" which permits air pressure to enter the float chamber. Should this small vent become blocked there would be no way for air to enter this chamber and a vacuum would cause erratic performance or possibly even complete engine failure.

In normal operation the mainmetering system provides all fuel for engine operation, the amount of fuel determined by air velocity which is, in turn, controlled by the throttle valve. The throttle valve is connected, indirectly, to the pilot's hand.

The venturi, or the area of reduced diameter in the main chamber, causes air to move at higher velocity thereby decreasing its pressure. The fuel discharge nozzle is located in this reduced pressure area which results in fuel being discharged.

Actually, with a low pressure in the venturi, it is a higher atmospheric pressure in the float chamber which forces fuel through the discharge nozzle. Generally, apressure difference of at least a half-inch of mercury is necessary before fuel will actually flow.

At low engine speeds this pressure difference is smallest and fuel delivery tends to decrease. To increase fuel delivery at low speeds a fuel bleed is included into the system. This is a small tube, in the fuel line, which continues past the main discharge nozzle and terminates behind the wall of the venturi itself In this area there is little air turbulence and air is at atmospheric pressure. Air, bled through this line, decreases fuel density and permits better vaporization of fuel at low rpms.

Another problem occurs when the throttle is closed completely. The pressure difference between atmospheric pressure and that in the venturi continues to decrease until very little fuel is being drawn into the air stream. la fact, the fuel flow may stop altogether.

Enter the idling system. The idling system is designed to insure fuel flow when the throttle is completely shut down. A separate fuel line runs from the fuel supply and terminates at a point just past the throttle valve on the engine side of the valve. With the throttle valve completely shut, low pressure in the manifold draws fuel directly into the manifold past an "idling jet."

Notice in the diagram that there is a separate air bleed for the idling system. It is not labeled on the diagram, but it is shown as a break in the idling system line leading to the area behind the venturi. It is located directly across the carburetor chamber from the main air bleed.

As we said, carburetors have to function properly under all conditions. This includes all altitudes.

The amount of fuel which enters the airstream is deoendent on air velocity, not air densitv. As the aircraft gains altitude air density decreases. At 18,000 feet, for example, air is just half as dense as it is at sea level.

As an aircraft gains altitude, asswning the sane power setting, air velocity remains constant, while actual quantity of air decreases. The fuel, however, continues to flow at the same amount and the fuel-air mixture becomes progressively richer.

You already know how this problem is solved - the mixture control has been thoughtfully provided to the pilot. By changing the mixture control setting the amount of fuel flow is regulated. Decreasing the fuel flow restores the proper fuel-air mixture at altitude. And by completely restricting fuel flow, idle cutoff is obtained and the engine is shut down.

Now when you open your throttle suddenly, you expect a sudden rush of engine power. And this is generally what you get, but it is not quite that simple.

When the throttle valve is opened suddenly, air rushes quickly through the venturi, but the fuel delivery system has a lag in operation. Suddenly, the air-fuel mixture is too lean and the engine will tend to die out.

To solve this problem carburetors are equipped with an accelerator pwnp. The pump consists of a small piston pump operated by a throttle linkage.

When the throttle is closed, the piston is pulled back and fuel fills the cylinder. If the piston is pushed forward slowly, as in slow throttle advancement, fuel seeps past it and back into the float chamber. But if the piston is suddenly moved forward, it forces fuel into the metering

system and provides amomentary charge to enrich the fuel-air mixture.

And finally, there is one additional system required on aircraft carburetors - the economizer.

When an aircraft is operated at full power, as at takeoff, an additional amount of fuel is needed in the mixture. This additional fuel - more than would be required simply to obtain maximum power - is needed to provide additional cooling to the cylinders and to prevent detonation.

Ergo, the economizer. This is a valve which is closed at throttle settings below approximately 70 percent. Above that power setting, however, a linkage opens this valve and causes additional fuel to enter the mixture. This is why power settings of 70 percent or less are generally far more economical than higher settings.

As we have seen a carburetor is a complicated device which needs some care to perform properly. Obviously, only an extremely qualified mechanic should ever adjust or tamper with a carburetor. But the more a pilot knows about the carburetor operation in his plane the more he will be able to operate his plane in a manner to insure safe, economical engine operation.

Thermal Valve Raises Oil Temperature

by Larry Swain

We had the same oil temperature problem that Richard Wnorowski has. We cleaned the oil screen, blew out the oil cooler lines, cleaned the oil cleaner - everything was clean as a pin and nothing helped.

We removed the thermal valve. It looked all right (our mechanic said he never saw one go bad.)

I would take the Cherokee up and give it a hard climb - the oil would head for the red line.

Finally I told my A&P to take the thermal valve out and put it in boiling water and see if it would open. It did not.

What the valve does is act like a car thermostat. It opens when the oil gets hot and permits it to flow through the oil cooler.

That was the problem, although it took two weeks to locate a new valve.

Location of EGT Probe

Perhaps you can advise me as to the correct location in the exhaust pipe to install an EGT probe. My plane is the 140 Cruiser (1974) with the 0-320 engine.

Donald W. Nemec
North Edwards, CA 98523

The optimum location for an EGT probe is tbree inches from the exhaust flange, according to Otis Cameron of Alcor Products, Inc.

This is an optimum measurement, however, and it is not super critical. Locating the probe further from the flange may delay start up time slightly and give a slightly cooler reading, but the difference will probably not be noticeable.

On the other hand, moving the probe too close to the exhaust valve will result in premature wear of the probe because of the blast effect in the direct area of the valve.

High Oil Temperature Causes

By George Schaefer

Hanging around my local service center today I ran across a reprint of an article from some aircraft magazine dated April, 1984 concerning high oil temperature. It seems someone else has encountered the same problem.

The possible causes listed are:

1. Is the oil pump AD complete or does the engine have either the sintered metal impeller or early pump with a keyed shaft?

2. Check for a blockage in the rocker box drain back tubes.

3. The gauge capillary line may be near another heat source: manifold muffler, etc. Radiated heat on the capillary tube would show on the gauge.

4. Refer to Lycoming Service Instruction #1088 regarding a close valve guide fit in order to dissipate heat properly. Valve guide to stem clearance will not show up on a compression test. The Service Instructions outline a wobble test without cylinder disassembly.

The article also stated that because nothing else showed up as unusual it was felt the aircraft was safe to fly while a cause and cure was found. (I would not, however, if things pointed to an oil pump.)

Exhaust Back Pressure Raises Oil Temp

By Charles L. Kessie

For those concerned about high oil temperature, I suggest they check their exhaust system for loose baffles or other obstructions. I think the baffles might be detected by tapping on the muffler with a rubber hammer.

The story behind the suggestion is as follows:

About six months after an extensive major we began to experience intermittent oil temperature problems. They did not correlate to the manner in which the aircraft was loaded or flown or to the outside air temperature.

Reduction of power and enrichment of the mixture would pull the needle back into the green. However, the return flight on tbe same day might not produce the same high temperature.

I suspected a blockage in the oil cooler and decided to have it cleaned or replaced. That was also a logical time to replace the metal oil lines with flexible lines and to replace the strainer with a spin-on filter.

The new parts could not be installed without removing the muffler which, on our aircraft, is a single unit at the rear of the engine.

When the muffler was removed the mechanic was surprised to hear something rattling. We returned it to Wag

Aero who discovered the wrong size baffles had been installed. They repaired the muffler without charge and the oil temperature problem was solved.

I would like torecommend Alcor TCP concentrate to the readers. Most people do not realize that 100-octane low-lead actually contains two ml of lead per gallon, which is four times as much lead as the old 80 octane (red) that contained 0.5 ml per gallon.

Lead is a problem for all engines, but particularly for 80-octane engines like mine. I have used TCP for three years and it really works.

I average 60 to 80 hours per year and the plugs never need cleaning before the annual. In fact, only the lower plugs show any build up.

TCP uses toluene as its "vehicle" and toluene will melt many plastics and will remove paint. Therefore, I recommend keeping the TCP in a surplus ammunition container. The containers have a rubber gasket in the lid and seal very tightly which should take care of any possible leaks.

I use the container to keep my fuel tester, hut care must be taken to keep the tester from direct contact with the TCP. I also recommend buying a dispenser and siphon from a farm supply or veterinary supply business. This is just a 60 ml syringe which can be purchased for less than $3.00, although Alcor will sell it to you for $14.80 even though it is plastic.

Knowing About Top Overhauls

by Terry Lee Rogers

The top overhaul is a controversial procedure which every aircraft owner or potential owner should be aware of.

If you are buying an airplane you will find pages of aircraft ads which tell of "recent top overhauls." If you fly your own plane there may well come a day when a mechanic reports one "jug down," and suggests a top overhaul.

And your mechanic may well tell you that if one jug is to be removed, you might as well top the entire engine.

At that point you will have to make an intelligent decision on how to proceed. So, let's take a look at the top overhaul both as a quick patch-up technique for a sick engine and as a technique for TBO busting.

Just as an overhaul means many things to different people - an engine broughtup to new limits versus one which just barely meets service limits specifications - a top overhaul done by two different mechanics may be two entirely different operations.

A top overhaul means the cylinders have been removed and some work has been done. Some mechanics merely inspect the jugs and parts and replace those which obviously need replacement. Other mechanics do a complete ring and valve job and may rework the jug itself. In any case, it still gets logged in the logbook as a top overhaul although how long it will last and what has been accomplished vary greatly.

Generally, a top overhaul is a band-aid approach to solving problems of an aging or ailing engine. Because most of the wear and tear in an engine occurs in the combustion chamber and in the reciprocating parts (valves and pistons), a sick engine can often be cured by servicing these parts only. The lower part of the engine, the crankshaft, camshaft, crankcase, hearings, oil pump and gear train are left untouched.

The problem, of course, is that although most problems develop in the upper section of an engine, they are not the only problems whichdevelop. A top overhaul, as aquick cure for an ailing engine, may last only a short time before other problems become apparent and a lot of money may have gone down the tubes for nothing.

To Save Money

The reason for a top overhaul, of course, is to save the cost of a complete engine overhaul.

Top overhauls are not cheap - they may run $2,000 to $3,000 or even more.

Often, you will be advised to get a top overhaul when compression drops in one cylinder. Many mechanics consider a reading lower than 60180 low enough to requite corrective action, but this is not necessarily so.

There is no law that a cylinder with 60180 compression or even lower be replaced. True, the FAA in AC 43.13-IA does contain guidelines, but this is advisory only. Certainly a reading of 60180 would not be dangerously low and should not result in pulling of ajug unless there is additional reason to believe there is a problem, such as a noise or excessive oil consumption.

The top overhaul is often used to extend TBO to delay an even more expensive complete overhaul or to fix an obviously sick engine so a plane can be unloaded on another pilot.

How can you decide whether it is worthwhile to go the top overhaul route? Just consider what you save and calculate how much you will need to gain in added engine time.

For example, suppose you get a quote for a good top overhaul of $2,400 while a rebuilt engine will set you back $6,000. Assuming a 2,000 hour TBO engine, the top overhaul will have to extend the TBO another 800 hours to break even ($2,400 divided by $6,000 times the total expected TBO of 2,000 hours.)

Not impossible, but chancy, especially if the engine has previously been top overhauled.

Generally, the more expensive the overhauled or factory re-manufactured engine is expected to be the more likely a top overhaul will be cost effective.

What If The Jug is Out Of Limits?

Perhaps new rings alone will solve the problem of low compression or, if the cylinder walls are scored, perhaps honing will do the trick.

But if the cylinder barrels are scored or if sticking

rings have worn too much of a step at the top of ring travel, you will have to make a decision on how to correct the problem: chromed cylinders or oversize pistons in the standard steel cylinders.

At first, chromed cylinders seem like the best way to go. Everyone knows chrome is harder than steel so the cylinders should last longer than steel, right?

Well, yes, hut remember you need special piston rings - cast iron rings - to operate in these engines. Chrome piston rings cannot he used in chrome cylinders, so you should expect greater wear on the rings in these applications.

And sometimes you just do not have a choice, Some late model Lycoming engines, including the 0-320-A, C and E, have nitrided cylinder barrels. These barrels are surface hardened and they cannot be ground oversize, You will have to go to chrome cylinder barrels.

For most other engines you may want to consider oversize grinding first. Lycoming jugs can be ground .010 inches oversize (jug gets a hit of green paint at the base of the cylinder) or ,020 inches oversize (jug gets a hit of yellow paint at the base of the cylinder).

On the other hand, if your engine is a Continental, the only oversize to which it can be re-ground is .015 inches (and 0 15 is stamped into the base of the cylinder - no paint code is used.)

One factor to he considered in determining whether to go oversize or the chrome cylinder route is whether parts are readily available and at what prices. If cast iron rings (chromed cylinders) or oversize pistons are not readily available, your plane may be grounded for quite awhile in the event of a failure while parts are on order.

How Far Should You Go?

When doing a top overhaul you have quite a hit of choice as to what to repair or replace and what to leave alone. You can cut comers a lot, but if you do so you are increasing the chances that the job will be short-lived.

If you are interested in bringing up compression in one cylinder, you may get by with reworking simply that one cylinder and leaving the rest alone. But as your mechanic will tell you - and he is being truthful - the work involved in doing just one jug is not much less than doing the rest. For example, it is often necessary to remove the entire exhaust and intake manifolds just to work on one cylinder.

Some mechanics insist that when one cylinder is ground oversize its opposite pair must also be ground oversize to provide proper "balance."

Although this is recommended it is not necessary, Any imbalance due to the size of the piston or even due to compression pressure caused by a different size piston is much less than the unbalance which would he caused by varying compressions in a normal engine.

And although it is not strictly necessary, depending on what you want to get out of a top overhaul, you should at least consider replacement of the exhaust valve guides (and perhaps the valve itself), the piston rings, and, depending upon the wear, the piston itself.

If you really want the top overhaul to get you many additional hours of engine time you need to bring the top portion back to new rather than merely service limits.

Also, the quality of the work will depend upon the experience and care of your mechanic. A top overhaul is not merely a by-the-numbers job which anyone can perform simply by following the instmctions in a kit.

A good mechanic is aware of common pitfalls and can give good advice about what should and should not he done. For example, many top overhauls fail because a mechanic installs the piston rings upside down. They look symmetrical, hut must be installed with the part number up. Also, the job may fail if a cylinder barrel is installed with a small amount of coding paint on the attachment flange.

Hopefully you have a mechanic who is already aware of the pitfalls in topping an engine and who will not have to educate himself while working on your plane.

Breaking It In

Once your engine is topped you will need to break it in just like it was a new engine. Those cylinders which have been reworked are, in fact, the equivalent of new engine parts.

If your engine has a chromed cylinder or two there may he some problems in breaking in. In fact, it is better if the break-in process is handled by the mechanic.

Most engine overhaulers will not guarantee the break in of chromed cylinders unless the engine is actually removed from the plane and run on a test stand. This is another good reason (besides cost) to try to stick with oversize pistons rather than chromed cylinders, wherever possible.

Where standard steel cylinders are used (regular or oversize), break in is also very important. Tbe process should be started immediately and continued for awhile. A virgin honed steel surface will quickly mst unless it is further polished and lubricated through the combustion process.

Use straight mineral oil for the first 25 hours unless your engine is prohibited from using it. Do this even if not all the jugs have been reworked. The old jugs will not be damaged by this oil and the mineral oil will help break in the new cylinders.

Keep ground running times as low as possible. Do quick mag checks and run ups, and try to keep power adjustments smooth.

Apply power smoothly for takeoff and do not reduce power in the climb. You want to properly seat the rings; babying the engine is not a good idea.

After 25 hours or so, your engine should be broken in and, if all goes well, you should be able to look forward to many hundreds of additional hours of flying on your engine.

Overheating Cured

By Stephen Goldfarb

The advice in the reprint mentioned in a previous letter was originally directed to me when I asked for help with my own overheating problem. The problem turned out to be a defective oil temperature sender.

This can be easily unscrewed from the engine accessory block, the electrical wires extended, and the sender dipped in boiling water That is how I finally found the cause of the problem.

Boiling water stabilizes at 212 degrees Fahrenheit, which is just above the midline of the temperature gauge on my airplane (a 1964 Piper Cherokee 180).

Piper did not have any of the senders, and the manufacturer had discontinued them. However I was able to find one at Av-Pac in Lincoln, Nebraska, (Phone 402-475-4125). Cost: $9.95.

There were considerable difficulties in arriving at this simple solution. Nothing was reported miss when the sender and the oil system were first checked. I had a top overhaul after believing that all other alternatives had been exhausted.

However, I do not begrudge the overhaul as the oil usage at the time was rapidly approaching overhaul limits.

Avionics Cures

By Rick Januszewski

In running a part-time avionics shop, I have seen many improper procedures and practices which cost customers aggravation and added expense. I hope these timely avionics tips lessen the burden of avionics repair costs.

The first area I would like to discuss is the Narco MK-12 series. When production was in full swing, there were more than 90,000 units produced. Today there are still many MK-12s in service which provide reliable operation.

Service parts are still available either from Narco or from salvage yards. The biggest problem is the lack of knowledge by avionics shops to service the older equipment properly. The worst problem is the use of an oil base cleaner or lubricant on the comm step inductors or nav wafer switches.

The oil will destroy the plastic nav-side switches rendering them useless. Oil on the comm-side step inductors will destroy the insulating function of the phenolic material resulting in short circuits. If dirty contacts appear to be the problem use a product such as Dry Kleen, a dry contact cleaner which leaves no deposits.

The next area of concern in the installation of avionics is the use of proper wire. Whenever the radio manufacturer calls for shielded cable, it must be used. Too many shops or individuals delete the use of shielded wire because of expense or difficulty of application.

Whenever shielded wire is left out common squawks are garbled receive or transmit audio, wandering VOR/LOC needles, cross-talk between NAV & COM audio, or engine noises in the intercom or radios.

The quality of the system is only as good as the weakest link. If shielded wire is used, but if not grounded or improperly done, it destroys the effectiveness of the shielded wire.

Finally, in response to a reader who had problems with a KR-86 ADF, the KR-86 is a very sensitive radio receiver. The altemator noise may be induced several different ways. The ADF loop cable cannot be bundled directly with battery cables. The ground for the amplifier in the KA-42B antenna is through the braided wire on the doubler plate. If the doubler plate is not properly grounded to the aircraft skin, a potential difference exists which could induce currents flowing in the skin directly into the antenna.

Hysonics makes an alternator filter which goes directly in series with the alternator's output. However, remember it is designed only to remove the normal mount of noise produced by a fully functional alternator. Whenever an alternator is checked by an accessory shop, the noise output level needs to be checked on an oscilloscope.

Leak Fix Suggested

By Barry E. Breen

For those who want to tackle the leak problems that many (if not most) Cherokees have, the advice of getting a water hose and a friend to play rainmaker is the first step. Be prepared to pull up carpets, panels, rear seat bench, etc.

My leaks seem to be solved for the most part. First, I re-caulked the windows (all) and replaced the "storm window" weather strip (available from hobby shops).

This helped a little, but secondly, I sealed the joint where the cowling and fuselage skin come together (the old sealing material had deteriorated after eleven years.)

This requires removal of the lower cowling half which is secured by screws in addition to the cowling top half which is simply "snapped" on.

Thirdly, I used sealant in between the wing root rubber seal and fuselage and between the seal and the wing. There was a gaping open area near the main spar where water could pass through if it got by the wing root seal. This helped quite a bit.

Finally, I opened the inspection plates on the underside of the wings to see if water could travel along the spar and into the fuselage area. Sure enough, there was plenty of opening both before and after the spar. I sealed these up with RTV. The bird now appears dry, but who knows what water demons lurk in the shadows of age.

Solved Vacillating Amp Needle

By Gerard K. Mazza

We bought our 1973 Cherokee Challenger approximately one year ago and at that time it had a vacillating alternator needle.

It never caused any problems, but would bounce back and forth in time with the engine. The person we bought the plane from said he had it to several mechanics, but none could come up with a fix.

Since it did not seem to cause any problems we did not give it much thought, but we did check with several mechanics, none of whom were sure what was causing the problem.

Finally, during a check ride in Dalton, Georgia, the examiner, Harvey Holman (a man who knows EVERYTHING about airplanes) mentioned that the problem was caused by a faulty master switch.

Sure enough he was right. It seems the contacts to the alternator field coil go bad and therefore give only intennittent current to the alternator

This saved me the price of a new alternator which was the cure suggested by several mechanics. If anyone else has the same problem they can try this fix or to test it out first, run a jumper across the leads on the master to see if this fixes the problem.

Master Switch Diode Comments

By Charles E. George

If you leave your master switch on and run the battery down, you have two options of getting started: you either remove the battery and get it charged or get a "jump start".

If you get a "jump", the master switch relay will not close until the battery gets enough of a charge to activate the master switch relay solenoid. Due to the fact that the open master switch relay will not deliver any current to the dead battery, the diode allows current to enter through the resistor to the battery.

This diode is rather small and the average outside power source could burn it up instantly, hence the resistor to protect it and allow the current to trickle into the battery.

When the battery receives enough charge it will close the master switch relay and eliminate the diode and resistor function. If the battery is absolutely discharged, it may require five minutes or more before the master switch relay will activate.

The diode, as you know, allows current to flow only one way and it will not allow current to flow from the battery when the master switch is open.

The engine can be hand propped with a low battery, but unless there is charge enough in the battery to activate the master switch relay, the alternator will not operate and the electrical system will remain dead.

The resistor on my Cherokee broke (vibration I believe) and the next time I had to "jump" start, the relay would not close. I realized the problem was the "resistor diode", so I touched a "jumper" across the master relay power tenninals with the master switch on and the master switch relay closed.

I lucked out that time and got my Cherokee started. I hope this clears up the "diode resistor" mystery.

Shimmy Cure Idea

By Dave Tbombom

I wrote a while back about a shimmy in the nose gear of our Warrior 161.

I replaced the 5116 ID x 7116 OD x 112 inch bushings in the scissors (6) and the bolts. The bushings are available at any good bearing supply. This has solved the problem. Other CPA members may want to give it a try.

Hard Starting, Carburetor Problem

BY Paul E. Lighthill

I felt I would like to share some of my experience with my Cherokee 140, which is a 1969 "B" model.

No doubt many readers will smile when I say that hard starting was a very annoying problem for about six months, which I was not able to cure until it got so bad it wouldn't even start with a hand prop.

Causes were cumulative. Slow cranking speed was corrected by replacing the starter bushings, both the obvious one on the end of the starter drive and the *not-so-obvious* one inside the starter.

Low cranking voltage was corrected by cleaning and tightening the ground cable-to-airframe connection under the rear seat and by adding a large area washer to properly secure the cable. It was not necessary to replace the original battery cables, although the battery wing nuts were left loose once after an annual and this caused symptoms of a dead battery

A suggestion about installing new batteries: after filling, allow them to sit on the bench overnight and check carefully for any leaks before installing in the airplane. I learned this the hard way with a brand-new battery that leaked acid in the airplane and caused needless paint damage.

Good spark plugs and leads are important for easy starting, and you should verify tbat your ignition switch is grounding out the right mag in the "start" position and not the left, which has the impulse coupling.

The single most important factor in curing the staring problem in my airplane was replacing the left magneto, which in my case had a failed impulse coupling. It was the old series Slick, for which individual service parts are not available, hence the purchase of an entire mag. At least the new ones can be repaired. With nearly everything in our society being disposable, including some of our precious freedoms, it is some comfort to know you can repair magnetos.

With these items accomplished, my Cherokee starts the first time every time with no more than two prop blades going by. With temperatures down to 50, one or two pumps on the throttle before cranking seem to be sufficient, with no priming required.

Last year during the annual the carburetor throttle shaft bushings and the shaft itself showed excessive wear so they were replaced. I was aware of the service bulletin on replacing the composite floats and also the probability then

that it would become an AD note, so I felt it would be wise to replace the composite float with the new, improved model.

Boy, was I wrong. Aft r taking delivery of the *air*plane I found that any time hard braking was used on roll out, the engine quit! Also, leaning the mixture did not produce the recommended rpm rise and the idle speed changed from time to time.

Consultations with the AI who has performed the work did not suggest apossible cause or solution. And since returning the airplane to him would have meant an extra hour of flight in either direction with possible extended downtime there, I decided to remove the carburetor myself and inspect it (I have an A & P license.)

Initial inspection revealed that when the carburetor was reassembled the butterfly valve had not been centered in the throttle bore according to the manufacturer's instructions, which are simply to close the butterfly with the screws loose, center it in the bore, and THEN tighten the screws.

If this procedure is not followed the idle circuit will not function properly. Nothing else was found wrong, so it was reassembled and reinstalled. A test run down the runway followed by hard braking caused the engine to die, however, so it was back to the hangar

An item in the FAA Airworthiness alerts gave a hint of the problem--a similar situation in a 140 was cured when a new float was installed which was one-half gram lighter.

I obtained another metal float, removed the suspect float from the carburetor, and weighed them with no discernible difference in the two weights. so the carburetor was given to another mechanic for inspection, which again revealed nothing out of specification. It was reinstalled and the airplane was flown ten hours with the engine quitting whenever heavy braking was used, which was as little as possible since our home runway is 10,000 feet long.

Since the problem was still there, however, and annoying if not an actual safety concern, more thought was given to it with the only remaining apparent solution to reinstall the original composite float.

Unfortunately, the AI had not retained it. Calls to a carburetor overhauler produced great flapping of wings and the sound of trial lawyers' cash registers ringing in the background as they explained that the manufacturer had expressly forbid them from selling or installing the composite float, which apparently causes the wings of an airplane to fall off if you use auto gas or 100 LL.

A call to a friendly AC salvage yard, however, produced the needed item. Thank God for free enterprise. Upon receipt of the float, it was installed, float level was checked, and a test run confirmed that the engine did not die under any condition.

One hundred hours later, everything is just as it should be. Thanks to the AOPA, the service bulletin did not become an AD, and although a little poorer from having to buy three carburetor floats, I think I gained some experience which may prove valuable to Cherokee owners.

I would, however, recommend that you avoid the use of 100 LL if you retain the composite float. I do not know what effect auto gas would have on the float, but I know what auto gas does to plastic, and what it does when you let it sit in a car for three months: it turns to varnish since its higher volatility allows the solvents to evaporate.

Using a Geared Starter

By Torello Tacehi

N32078 is, or was, plagued with the typical 140 problem -hard starting. Mine is a 150 hp Cruiser.

Since I have owned it from January, 1983, 1 have installed a second battery, now one-year old. The previous owner installed a new battery two weeks prior to my purchase.

As we all know, the battery is marginal at best, in addition to being far away from the starter. We add to that the aluminum cable and, unless conditions are absolutely perfect, our Cherokees will not start.

So we spend countless hours trying to find an economical solution, but there isn't one. The problem is still that of a marginal battery trying to meet the needs of a very ampere hungry starter.

The cure--an amperage miser starter--a geared starter.

A member had *written* in and said he installed a geared starter, but also bad to change the ring gear. Not so, Cherokee breath.

I purchased a Cherokee geared starter from an aircraft bone yard very reasonably. The fellow I purchased it from assured me it was guaranteed to be in good condition. It was.

I found that the Bendix drive had a smaller pitch nine-tooth gear as opposed to the larger pitch nine-tooth of my direct drive starter. Since both drives are the Bendix follow-through types introduced in the 50's, all I had to do was swap.

Well, almost. It seems that the end of the shaft on the geared starter is cut down to accept the small pitch gear, so I simply made a bushing on the gear end of the large nine-tooth gear and, presto, a geared starter without changing the flywheel.

I purchased the Bendix drive from an automotive starter rebuild shop and found it to be identical to the aircraft counterpart except for cost - $17. The quality is just as good, and I might add, the automotive one works a lot harder than the aircraft one.

I may also add that the starter on the Cherokee began life as a Starter On a Massey Ferguson tractor--the parts interchange.

By luck, the owner of the starter rebuild shop happened to be a pilot and owner of one of those high wing jobs--but very knowledgeable in his trade. At any rate, my Cherokee now starts.

Cherokee Hints & Tips

Faulty Oil Temperature Gauge

By Roland Backfisch

In regards to Richard Wnororski's note in the December issue of The Cherokee in which he refers to the oil temperature variations in his plane, I have the same problem in my 1972 140.

After checking everything I could think of and finding nothing, and combined with the fact that the oil never did show signs of being overheated, I resorted to the knuckle solutions.

I rapped the gauge with my knuckles and it would always drop hack to normal. The exterior connections on the gauge are all tight so there must be a loose or shorted connection inside the gauge.

Avoiding Cherokee Leaks

By Ken Borzage

Ever heard "All Cherokees leak like crazy?' What an uninformed statement!

Leaks occur mainly in four places:

1. The windshield center strip screws and the lower strip screws. Put some silicon seal on each screw's threads before you thread it into the nut. Over the top of the screw means nothing.

2. The side windows. Use the 1-1/2 inch wide 31 16 inch thick foam tape and NAPA automotive windshield butyl rope or tape. You can work with it, roll it, stretch it, etc., and it does not harden, hut is an excellent seal.

3. The door. Get the snuffer rubber channel that is used on the Warrior. It channels the water around the seal and out the bottom of the door.

4. The wings leak, but into the hull, and the hull has drain holes built into it. It is normal to see some water in this area.

Stuck Bendix

By Mark Schrimmer

I own a 1978 Warrior II with 2,800 hours on the airframe and 900 hours on a factory-new engine. I am based at Fullerton Airport, 20 miles east of Los Angeles, and fly about once a week.

Since buying my plane two years ago I have had one constant problem: the Bendix on my starter gets stuck. Usually it will not spin out to engage the flywheel. Other times, it will not shake loose from the flywheel after the engine starts. But, does the plane shake when this happens.

About a year ago I had the Bendix overhauled, but after 20 starts it was hack to its old tricks. I have tried spraying silicone spray on the bearing in the front and also on the shaft, but the Warrior cowling covers the entire Bendix and it is hard to reach. Any suggestions? One guy suggested hitting it with a hammer to shake it loose.

Engine Conversion - 180 HP

Cherokee owners express a lot of interest in engine conversions. The lure of extra horsepower, especially to Cherokee 140 owners, is mighty powerful.

The main conversion is made by Avcon and will convert your Cherokee 140,150, or 160 to a 180 horsepower plane with constant-speed prop. Out goes the 0-320 which is replaced with a Lycoming 0-360-A1A.

According to Avcon you can expect the following improvements in performance:

	Stock	Avcon
Top Speed (mph)	139	158
Cruise (75%, mph)	133	150
Stall (unchanged)	55	55
Take Off Run (Feet)	800	550
Climb (Ft/Minute)	600	950
Service Ceiling	14,300	17,700

How much is this going to cost? Avcon sells the basic kit, minus engine or propeller, for $2,650 (1986). For this you get the STC, blueprints, weight-and-balance data, exhaust manifolds, baffling, fuel pump, gauges, prop spinner, vernier prop control, and hardware and wiring.

You can order the same kit, including a factory new Hartzell Propeller and governor for $5,500, and if you want a new engine as part of the deal, the cost is $16,650.

Finally, if you would like Avcon to do the actual installation, the cost is $17,450 installed at their Udall, Kansas facility. They say they would like your plane for ten working days to complete the job.

These prices are for a Cherokee 140. The cost of these kits for a 150 or 160 is slightly higher, while the cost for a 151 or 161 is slightly lower.

You can contact them at Avcon Conversions, P.O. Box 654, Udall, Kansas 67146 or call at (316) 782-3317.

Impulse Coupler, Tach Error

By Bill Leithauser

About three months ago we got into starting difficulties again which was very intermittent and at first seemed to occur more often when the engine was warm or hot.

Our first thought was that our technique was faulty until it would not start cold a couple of times. You guessed it - the impulse coupler was bad, intermittently.

Since it was replaced the engine starts almost immediately. Based on my experience I am convinced most of the starting problems with Cherokees (at least 1979 Archers) involve had impulse couplings.

We thought we had a real efficient plane since it always seemed to outperform the book at cruise with no particularly huge fuel bum. Not so! The tach was 130 rpm slow at cruise settings. Now that we have cut back, speeds are by the book and gas consumption is running less than book. This may be something everyone should check.

A seemingly small (five percent) error is a lot of

strokes at the top end. Any fairly large maintenance operation should have one of the new solid state hand tachometers which can he aimed from the cockpit which makes checking through the rpm range a snap.

Converted Cherokee "250"

We recently read an article in "Aero" about Bob Frischknecht, of Big Bear City, California, who changed his 1969 Piper Cherokee 235 to a 250 hp. The engine was converted, which sounds like the 235 was upgraded and not changed out.

We have a 1969 Piper Dakota 235, N2888C, and would be interested in the conversion. What can you tell us about it?

John & Carmen Bethel
San Ramon, CA 94583

According to Bob Frischknecht, the plane was converted prior to his purchase. The job was handled by Lynn Aviation, of Long Beach, California, for about $15,000. Larger pistons and jugs were used to get the increased power.

According to Bob, nothing can keep up with the plane. It cruises at 175 mph while burning 11 gallons per hour.

One-Piece Windshield Report

By Frank Rader

On April 1 I departed Lakeland, Florida with a one-piece windshield and some new friends.

My plane is a 1976 Archer II with 4,500 hours TT. The pilot's side windshield (1/4 inch thick) was continuing to crack despite "stop" holes where the OAT was installed. I anticipated it would not pass annual.

Another Cherokee pilot and fiieud, Gus Jamison, sent me information about the one-piece STC from Kosala Associates.

I delivered my plane at 9:30 a.m. Easter Monday and left at 3 p.m. the next day.

I have flown 10 hours on the STC. Two instruments, the OAT and magnetic compass, were relocated.

Benefits:

1. My wife's comment, "Boy, that really looks slick." It is very Mooney like.

2. The compass is mounted on the glare shield directly in front of the pilot. I am still amazed at how much more "heads up" I am flying with much better roll awareness in cmise and maneuvering. The location makes me feel more precise. The compass internal light is retained.

3. The sweep of the windshield, combined with relocation of the OAT, means I no longer "crane" forward to look for traffic or an accurate temperature reading. I fly more comfortably with a better view.

4. The new windshield also means a complete resealing around the windshield area. We flew in light rain, landed in heavy rain, and parked overnight in rain. The plane did not leak, though it had before the change.

5. The sunshade clips are replaced with newer, better ones mounted onto the 314-inch structural bar that replaces the center post. The bar sits about two finger widths away from the glass at its widest.

6. The cabin seems wider without the stock centerpiece.

7. If you already have the 114-inch glass there is no change to your weight-and-balance. If you have 118, there is a seven pound penalty.

8. The claim of a quieter cabin is one I cannot confirm since I had 114-inch glass to begin with.

9. Kosala Associates makes no speed claims and I did not observe speed changes.

10. The overall effect is very pleasing, very Mooney-like.

Things to **watch:**

1. They sell a clear (my choice), gray tint and green tint windshield, hut do not always have each in stock. Call first.

2. Since the compass light wiring must he rerouted from the overhead console they must open that area. One screw was not tightened and they failed to reconnect the overhead lights. The fix is simple. This is another example of planning enough time to do it right and examine it right.

3. Both references mentioned problems with their compass after the change. The support bar is degaussed so as not to influence the compass.

4. Remember to take your log books.

Be Careful With Clear Strobe Lens

By Dan Caliendo

Yes, I have had experience with a clear lens on the tail strobe. Advise readers not to try it!

The flash off the top of the wings and the "stopped prop" effect were too much to ignore and mined night vision.

If he has already installed the lens or wants the clear lens for some reason he can cover the front of the lens and block light by installing a piece of foil on the inside of the lens (glue it in place after determining the exact size to block all of the wing and no more.)

STOL Cherokee Conversion

A Cherokee is a great airplane, hut it is no plane to operate in the bush or from short fields. At least not unless it is a STOL conversion.

An article in the May issue of Private Pilot magazine covers the cost and advantages of the Horton STOL conversion for a 1968 Cherokee 180D.

The Horton kit adds 12.6 pounds to the aircraft weight, hut boy what it does for performance. Stall speed is decreased 13 knots. Approach speed is 52 knots with landing at 35 knots.

Takeoff run is cut in half. Technique involves trim-

ming for landing, apply full power, popping one notch of flaps at 43 knots, and applying steady back pressure to establish a proper climb.

The Horton kit provides a wing foil modification, upper and lower stall fences, dorsal fin and fairing tips, vortex generators, cherry rivets, hardware, fiberglass wing tips, decals and STC, epoxy and blueprint drawings. Gap seals are also available as an option.

Not bad for a price (in kit form) of $799. Factory installation at the Wellington, Kansas facility runs $1,449, plus tax (1986).

Reduction in stall speed is accomplished by the kit components, working in unison, to increase the effectiveness of all control surfaces at low speeds. For example. the vortex generator, consisting of small tabs, located on the vertical &, redirect the air to critical parts of the rudder to insure that it remains effective at very low airspeeds.

Anyone who feels a STOL Cherokee might fill his needs should contact Horton, Inc., Wellington Municipal Airport, Wellington, KS 67152 or call at (800) 835-2051.

Choices at Major Overhaul Time

Having spent some time discussing top overhauls, it is time we spent a little more discussing major overhauls, particularly the problem of deciding what an overhaul really is.

Used aircraft ads use all sorts of descriptions - major overhaul, factory rebuild, factory new, zero time.... What exactly do these terms mean?

A pilot with a run-out engine has many ways to go, but he had better understand the terminology or he may not get what he is expecting.

Ofcourse, engine manufacturers recommend TBO (Time Between Overhaul) periods for their engines. But these are recommendations only. The manufacturers do not make any guarantees that these engines will run to their TBO times (how many used planes with 2,000 hour TBO engines are advertised as having 1,500 hours total time, 300 SMOH?)

On the other hand, it is possible to operate an engine beyond TBO. The FAA does not require engine replacement at TBO periods if the engine is used in noncommercial activities. (Air taxi or airline use require replacement at TBO.)

Some engines have been successfully operated far beyond recommended TBO, but a pilot is pushing his luck. Exhaust valves, in particular, are known to fail in large numbers when an engine is operated far beyond TBO.

But there comes a day when the only practical alternative is to rebuild or replace the tired old engine. What options are available?

Overhauled Engines

An overhauled engine is defined by the FAA. To be properly logged as an overhauled engine it must (using proper tools and techniques) "have been disassembled, cleaned, inspected, repaired as necessary and reassembled; and it has been tested in accordance with approved standards technical data acceptable to the Administrator, which have been developed and documented by the holder of the type certificate, or a material, part, process or appliance approval under Part 21.305 of this chapter."

A properly overhauled engine should be able to operated to the full recommended TBO. But you have only the reputation of the overhauler to be sure the overhaul was done properly.

Service limits are specified for all major parts of the engine and an overhaul is legal if all these parts just meet service limits. Questionable parts can be put back in the engine legally and you may end up with a legal overhaul, but your chances of achieving a substantial portion of the TBO range from slim to none.

Cheap overhauls may present a few other nasty surprises. For example, it is not uncommon for defects to be found when the engine is disassembled which may raise the quoted price several thousands of dollars. What is your bargaining position after the engine is disassembled?

Also, without even considering the work on the engine itself, an inexpensive overhaul may not include work on such accessories as magnetos. You need to be sure you know what work is included in an advertised price for an overhaul.

Rebuild Engines

The FAA also describes what a rebuild engine should he. It should have been "disassembled, cleaned, inspected, repaired as necessary, reassembled, and tested to the same tolerances and limits as a new item, using either new parts or using parts that either conform to new part tolerances and limits or to approved oversized or undersized dimensions."

So there you have it. According to the FAA a rebuilt engine should be the equivalent of a new engine.

And there are two types of rebuilt engines available: factory rebuilt and custom shop rebuilt. A factory job is more expensive - generally the price of a completely new engine less the core charge.

But the factory is the only facility which is capable of granting "zero time" to an engine. It comes from the factory with a brand-new log book and zero-time.

An engine advertised as "zero-time" may not be such, and will not be unless it was rebuilt by the factory. Both Lycoming and Continental distinguish their rebuilt engines with the letter "R" in their serial numbers.

Custom shops are usually less expensive and many do fine work. They will often quote a good price, but it is contingent upon a customer guarantee of certain major parts of the engine - generally the crankcase, crankshaft and camshaft, and perhaps other parts as well. If any of these parts do not meet limits set for new parts they must be replaced and the customer pays the additional cost.

The Cherokee Owner's Listing of Parts & Services Suppliers

By Terry Lee Rogers

We get a lot of requests for the names of suppliers of parts and services. Everything from air filters to Yoke Refinishing. So I thought it would be a good idea to compile a list of suppliers of the more popular items. So if you want to buy some good or service, check out this list first.

Items are listed alphabetically, by the name of the goods or services.

Not every aviation supplier is listed - we didn't have the time or room. We tried, however, to list the ones we get the most calls for information on. In some categories - engines and engine re-builders - for example, we listed just a few of those suppliers with countrywide good reputations.

Save the list for future reference. You never know when you might need it.

AD List & AD Log - Aerotech Publications, P O Box 6005, Freehold, New Jersey 07728 (908) 462-5330 (800) 235-6444.

Air-Oil Separator - Walker engineering, 7405 Hayvenhurst Ave., Van Nuys, CA 91406 (818) 782-2154.

Airplanes - new - Piper Aircraft Corp., 2926 Piper Drive, Vero Beach, FL 32960. (407) 567-4361 FAX 778-2144.

Alternator Rebuilding, Electrosystems, PO Box 273, Ft. Deposit, AL 36032 (205) 227-8306 or Pifer Aiiotive, 1660 Airport Road, Waterford, MI 48054 (313) 674-0909.

Altimeter Repair - Precise Devises Co., 1689 Palace Drive, Clearwater, FL 33516 (813) 581-4149.

Auto Fuel STC - Petersen Aviation, Route 1, Box 18, Minden, NE 68959 (308) 237-9338; EAA, Witman Field, Oskosh, WI 54903-3086 (414) 426-4800.

Auto Pilot Repair - Lowe Aviation - P O Box 4286, Macon, GA 31208 (912) 788-7450.

Aviation Buyers Directory, 400 Main St., Stamford, CT 06901 (203) 325-2647.

Battery Box Modification, Bogert Aviation, Route 1, Box 1676, Prosser, WA 99350 (800) 627-8088.

Brake Discs, Stainless - Avpro, 1400 E. South Btvd., Montgomery, AL 36116 (800) 334-6359.

Brake Parts, Discount - Midwest Pawnee, P O Box 234, Vincennes, IN 47591 (800) 457-9211

Bulbs, landing & other light - Wilco, 3502 W. Harry St., Wichita, KS 67213 (316) 943-9379.

Camshaft Reconditioning - ECI, 9503 Middlex, San Antonio, TX 78217 (210) 828-3131 or Superior Air Parts, 14280 Gillis Rd., Dallas, TX 75244-3792 (214) 233-4433.

Cable, Copper (Replacement Kits) Bogert Aviation, Route 1, Box 1676, Prosser, WA 99350 (800) 627-8088; American Aviation, Box 850023, Yukon, OK 73085 (405) 354-7136.

Cable, Copper - G&H Enterprises, 1800 NW Third St., Oklahoma City, OK 73106 (405) 232-2607.

Camshafts/Crankshafts, PMA, Lycoming - Air Support Co., RR2, Box 132, Marshfield, MO 65706. (800) 247-2738.

Carburetors (Parts) - Facet Aerospace Products, 1048 Industrial Park Rd., Bristol, VA 24201 (703) 669-5555.

Carburetor Parts - Eiectrosystems, Inc., P O Box 273, Ft. Deposit, AL 36032 (205) 227-8306.

Carburetor Temperature Gauge - Aircraft components, P O Box 1188, Benton Harbor, MI 49022 (800) 253-0800 (PN71-509-4).

Crankcase Welding - Ajax Aviation. 319 Wolf Road, San Antonio, TX 78216 (800) 531-7212 or Diversified Manufacturing Co., 2806 N. Sheridan Road, Tulsa, OK 74115 (800) 874-1351.

Cylinders, Cermichrome - ECI, 9503 Middlex, San Antonio, TX 78217 (210) 828-3131.

Cylinders, exchange - Aero Aviation, 3701 Highway 162, Granite City, IL 62040. (800) 362-3044.

Decals: Aero-Graphics, 9740 SE 58th Ave., Belleview, FL 32620; Aero D-Cals, 3240 Drane Field Rd., Lakeland, FL 33811 (813) 644-2451.

Door Seals, Inflatable - Bob Fields Aerocessories, 340E E. Santa Maria, Santa Paula, CA 93060 (805) 525-6236.

Door Seals, Improved - RB 5022 door seal available from Brown Aircraft Supply, 4123 Muncy Road, Jacksonville, FL 32207 (904) 396-6655.

EGT Manufacturers - Alcor, 12043 Colwick, San Antonio, TX 78216 (800) 354-7233; Electronics Intemational, 5289 NE Elam Young Parkway, Hillsboro. OR 97124 (503) 640-9797; Insight Instrument Corp, Box 194, Ellicott Sta., Buffalo, NY 14205 (716) 852-3217; J.P. Instruments, P O Box 7033, Huntington Beach, CA 92615 (714) 962-0112 or KS Avionics, 25216 Cypress Ave., Hayward, CA 94544 (510) 785-9407 (800) 346-4469.

Engines - Carter Aviation Supply, 2120 G St., Elizabethton, TN 37643 (615) 542-2811, Linda Lou, 3514 Winhoma, Memphis, TN 38118 (901) 365-6611

Engine Overhauls - Mattituck Airbase, Airway Drive, Mattituck, NY 11952 (516) 298-8330; T. W. Smith Engine Co., Hangar 1, Lunken Airport, Cincinnati, OH 45226 (513) 871-3500.

Engine & Prop Balancing (dynamic)(Call for nearest FBO) - Chadwick-Helmutb Co., 4601 N. Arden Dr., El Monte, CA 91731 (818) 575-6161.

Engine Baffle Material - San Val Discount Parts, 7456 Valjean Ave., Van Nuys, CA 91406 (800) 423-3281.

Engine Cleaning Chemicals - B&B Chemical Co., 875 W. 20th St., Hialeah, FL 33010 (water base and emulsion cleaners); Eldorado Chemical Co., (emulsion), P O Box 34837, San Antonio, TX 78265, or Oakite Products (water base), 50 Valley Road, Berkley Heights, NJ 07922.

Engine Conversion (180 hp, CIS prop) - Avcon Conversions, P O Box 654, Udall, KS 67146 (316) 782-3317 - 150-160 H P - Penn Yan, 2499 Bath Road, Penn Yan, NY 14527 (315) 536-2333 or (800) 727-7230.

Engine **Mount** Repair (welding **tubing)** - Mount Central, 9529 Sunset Lane, Little Rock, AR 72209 (501) 565-6100 or Kosola Associates, P O Box 3529, Albany, GA 31707 (912) 435-4119.

Engine Mounts - Lord- Mechanical Products Div., Lord Corp., 1635 W. 12th St., Erie, PA 16514 (814) 456-8511; Vibration Isolation Products Corp, Box 7029, Burbank, CA 91510 (818) 896-1191 or Linda Lou Inc., 3314 Winhoma, Memphis, TN 38118 (914) 365-6611, Kosola & Assoc, P O Box 3529, Albany, GA 31707 (912-435-4119.)

Engine Porting - High Performance Aircraft Engines, P O Box 1256, Mena, AR 71953 (800) 233-1099.

Exhaust System & Muffler Parts - new and rebuilt - Wall Colmonoy Corp, 4700 SE 59th St., Oklahoma City, OK73135 (405) 672-1361 or Aero Fabricators, 1216 North Road, Lyons, WI 53148 (414) 763-3145 (800) 558-6868; PMA Fabricators, 2310 NW 55th Ct., Suite 125, Ft. Lauderdale, FL 33309 (800) 942-3774.

Fiberglass Cloth & Chemicals - Defender Industries, 255 Main St. New Rochelle, NY 10801 (914) 632-3001.

Fiberglass Parts (Piper Replacement) - Globe Fiberglass Inc., 4033 Holden Rd., Lakeland, FL 33811 (800) 899-2707, (813) 644-2178.

Fiherglass Repair & Construction Handbook - TAB Books, Blue Ridge Summit, PA 17292-0850 (800) 233-1128.

Fittings, couplers & Clamps - Reid Tool Supply, 2265 Black Creek Road, Muskegon, MI 49444 (800) 253-0421).

Fuel Additive **(TCP)** - Alcor, Inc, 12043 Colwick, San Antonio, TX 78216 800-354-7233 - available from many aviation supply houses including San Val, 7456 Valjean Ave., Van Nuys, CA 91406 (800) 423-3281.

Fuel Injector Body Overhaul - Southeast Fuel Systems, 1875 Barrett Dr., Rockledge, FL 32955 (305) 632-2762.

Fuel Injection Overhaul - Aircraft Accessories, 2740 N. Sheridan, Tulsa, OK74115 (918) 835-9924, or Aircraft Fuel Injection Service, 2731 Brookfield Ave., Dallas, TX 75235 (800) 846-2515

Fuel Tanks, Ferry - Toms Aircraft Maintenance, 2801 E. Spring St., Long Beach, CA 90806 (213-426-5331

Fuel Tank Repair and Rebuilding - Skycraft Corp, Rt. 1, Hampton Airfield, N. Hampton, NH 03862 (603) 964-1450.

Glareshield Replacement - Dennis A. Ashby, PO Box 1584, Upland, CA 91785 (909) 982-3793.

Hardware, Aircraft - Skybolt, 551 N. Park Ave., Apopka, FL 32712 (407) 889-2613.

Hat Shelf Bulkhead - Wentworth Aviation, 3015 Cedar Ave S, Minneapolis, MN 55407 (612) 722-0065; Oxford Design, 404-564-2244.

Instrument Panel - Walnut - Clark Gates Custom Aircraft Panels, Box 1029, Parowan, UT 84761 (800)-230-7711 (801) 477-8553.

Instruments - ICT Instruments, 307 S. Laura St, Wichita, KS 67211 (316) 263-1917; Air Capital Instruments, 216Laura, Suite 2, Wichita, KS 67211 (316) 262-6383; Thompson Associates, P O Box 12032, Wichita, KS 67277 (316) 263-9281; Midwest Aircraft Instruments, 4215 W. 220th St., Jordan, MN 55352 (612) 492-6008; Kelley Instruments, 1024 Santa Fe, Wichita KS 67211 (800) 835-1054 or Century Instrument Corp, 4440 Southeast Blvd., Wichita. KS 67210 (800) 835-3344.

Intercooler, turbocharger - Airflow Systems, 4210 Sierra Morena, Carlsbad, CA 92008 (619) 632-7010 or Turboplus, 1520 26 Ave. NW, Gig Harbor, WA 98335 (206) 851-6440.

Interior Plastic - Plane Parts Co., 4429 W. 169th St., Lawndale, CA 90260 (310) 542-1702; Kinzie Industries, P O Box 847, Alva, OK 73717 (405) 327-1565.

Jacks, Aircraft - The Jack House, 222 E. Maryland Ave., North Little Rock, AR 72120 (501) 835-6033

Magneto Information - Bendix, Teledyne **Continental**, P O Box 90, Mobile, AL 36601 (205) 438-3411; Slick, 530 Blackhawk Park Ave., Rockford, IL 61104 (815) 965-4700.

Magneto Parts - Aero Accessories, 1240 Springwood Church Road, Gibsonville, NC 27249 (800) 822-3200.

Magneto/Generator/Starter/Carburetor Repair - Aircraft Systems, 5187 Falcon Road, Rockford, IL 61109 (815) 399-0225.

Magneto Rebuilding - Electrosystems, P O Box

273, Ft. Deposit, AL 36032 (205) 227-4327.

Manuals, Owner & Service (aircraft, engines & accessories) - ESSCO, 426 W. Turkey Foot Lake Road, Akron, OH 44319. (216) 644-7724.

Mouse Milk (Penetrating Oil) - Worldwide Filter, 1685 Abram Court, San Leandro, CA 94577 Fax (510) 483-5122.

Oil **Analysis** - Spectrum Laboratories, Inc., 524 Pelham Avenue, Piscataway, NJ 08854 (201) 752-1400; Spectro, PO Box 1227, Arlington, TX 76004 (817) 861-3367 or Analysts, Inc., P O Box 2159, Rolling Hills Estates, CA 90274 (213) 541-5611.

Oil, Grease & Lubricating equipment - Aviation Lubricants, Columbus, OH (800) 666-6457 or (614) 860-0001 or Aviation Consumables, 4000 Red Bank Rd., Cincinnati, OH 45227 (513) 561-9977..

Oil Cooler Repair - Pacific Oil Cooler Svc., 1430 Chico Ave., S. El Monte, CA 91733 (800') 866-7335; Drake Air, 4085 Southwest Blvd, Tulsa, OK74107 (918)445-5106 (800) 542-6899 or Lori, 6930 N. Lakewood, Tulsa, OK 74117 (914) 272-8000.

Paint, Aircraft - Randolph Products, P O Box 830, Carlstadt, NJ 07072 (201) 438-3700.

Parts & Supplies, All Kinds, Discount - San Val Discount Parts, 7715 Valjean Ave., Van Nuys, CA 91406 (800)423-3281; Aircraft Spruce &Specialty, Box 424, Fullerton, CA 92632 (800) 824-1930; Central Aircraft Parts, 16207 Airport Rd., Lockport, IL 60441 (815) 838-5470; Chief Aircraft Parts, 345 Whispering Pines, Grants Pass, OR 97527 (503) 474-2409; Air Parts of Lock Haven. (800) 443-3117; Brown Flying Service, 1331 Northern Blvd., San Antonio, TX 78216 (512) 824-7241 or Fullerton Air Parts. 4010 W. Commonwealth Ave., Fullerton, CA 92633 (714) 525-8226, Van Nuys Pilot Supplies, 7516 Valijean Ave., Van Nuys, CA 91406 (818) 988-9188 (parts, tubing, baffles.)

Pistons, ECI, 9503 Middlex, San Antonio, TX 78217 (210) 828-3131, or Superior Air Parts. 14280 Gillis Rd., Dallas, TX 75244-3792 (214) 233-4433

Plane **Sense** Handbook - (free) QD20-5, US Dept of Transportation, Subsequent Distribution Sec. M-493.3, Washington, DC 20590.

Plexiglass & tools - Aircraft Spruce & Specialty, P O Box 424, Fullerton, CA 92632 (714) 870-7551

Plexiglass Repair Kits (Micromesh) - Micro-Surface Finishing Products, Box 818, Wilton, IA 52778 (319) 732-3240 (800) 225-3006.

Pre-oiler, Oilamatic, P O Box 5284, Englewood, CO 80155 (303) 770-0175.

Propeller Governor Overhaul - Alamo Accessories, 10843 Vandale, San Antonio, TX 78216 (210) 349-9721 (800) 950-8332.

Propeller Maintenance & Re-Pitching - Rocky Mountain Propellers, Tri County Airport Erie, CO 80516 (303) 665-7905; New England Propeller Service, P. O. Box 415, East Haddam, CT 06423 (800) 873-2388 (203) 873-9402.

Rockers (valve) rebushing - Aircraft Engine & Accessory, 2275 Crown Road, Dallas, TX 75229 (214) 243-7404.

STC Directory, Summary of Supplemental Type Certificates ($58) -Superintendent of Documents, US Govt. Printing Office, Washington, DC 20402.

Safety Wire & Safety Wire Pliers - ATS, P O Box 370, Oscoda, MI 48750 (800) 248-0638.

Screws, Stainless Steel - D&D Supply, PO Box 1200, Hampton, NH 03843 (800) 468-8000.

Shop Manual ($19.95)(covers shop practices) - Sacramento Sky Ranch, 6622 Freeport Blvd., Sacramento, CA 95822 (800) 433-3564.

Spark Plug Hand **Sandblaster** - ($12.95) - ATS, P O Box 370, Oscoda, MI 48750 (800) 248-0638.

Speed Brakes - Precise Flight Inc., 63120 Powell Butte Road, Bend OR 97701 (800) 547-2558 (503) 382-8684.

Starter, Bendix - Chief Aircraft, 345 Whispering Pines, Grants Pass, OR 97527 (800) 447-3408.

Starter/Alternator Rebuilding - Aerotech, 815 Huntington Road, Louisville, KY 40207 (800) 634-0190, or Electrosystems, P O Box 273, Ft. Deposit, AL 36032 (205) 227-8306.

STOL Kit - Bush Conversions, P O Box 431, Udall, KS 67146 (316)782-3851; Horton Conversions, Wellington Municipal Airport, Wellington, KS 67152 (800) 835-2051, (316) 326-2241.

Strobes & Parts - Whelan Engineering, Route 145 Winthrop Rd., Chester, CT 06412 (203) 526-9504; Marv Golden Discount Sales, 3686 Lakefair Ct.. San Diego, CA 92130; San Val Discount Parts, 7516 Valjean Ave., Van Nuys, CA 91406 (800) 423-2381; Central Aircraft Parts, 16207 Airport Rd., Lockport, IL 60441 (815) 838-5470; and Aircraft Spruce & Specialty, Box 424, Fullerton, CA 92632 (800) 924-1930.

Strut Pump - Bogert Aviation, Route 1, Box 1676, Prosser, WA 99350 (800) 627-8088.

Strut Repair Parts - Aircraft Spruce & Specialty, Box 424, Fullerton, Ca 92632 (714) 870-7551.

Strut Seal **Kit,** Granville - available from most mail order houses, including Chief Aircraft Parts, 345 Whispering Pines, Grants Pass, OR 97527 (800) 447-3408.

Tire preservative - B. F. Goodrich Age-Master No 1, $25.95 a quart from San Val, (800) 423-2381

Timing Indicator, TP-102E - U.S. Tool & Supply, 15135 Cleat Street, Plymouth, MI 48170 (800) 482-4167.

Tires, Discount - Haski Aviation, RD 2, Box 316, New Castle, PA 16101 (800) 652-5546 or Dresser Tire, 6900 Acco St., Montebello, CA 90640 (800) 247-8473.

Tires, Recap - Wilkerson Tires, Crew, VA 23930 (804) 645-9641

Tools (including good aircraft spark plug socket) - Aircraft Tool Supply, Box 370, Oscoda, MI 48750 (800) 248-0638.

Turbo **Overhauling** & Repair - Southwest Aeroservice, 1501 E. 4th Place, Tulsa, OK74120 (918) 592-1177; or Aero-Kool, 1495 SE 10th Ave., Hialeah, FL 33010

(305) 888-3082.

Vacuum Pumps, Discount - Chief Aircraft Parts, 345 Whispering Pines, Grants Pass, OR 97527 (800) 447-3408 or Haski Aviation, RD 2, Box 316, New Castle, PA 16101 (800) 652-5546.

Vacuum Pumps, Rebuilt - Prarie Aviation Supply, 3805 Verde Woods East, Grand Prarie, TX 75051 (800) 238-7787.

Vacuum Systems, backup - Airborne Division, Parker Hannifin, 711 Taylor St., Elyria, OH 44035 (216) 284-6300 or Pamco Industries, 7702, Geralayne Dr., Milwaukee, Wi 53213 (414) 771-8792.

Valve Lifter Rebuilding - Aircraft Engine & Accessory, 2275 Crown Road, Dallas, TX 75229 (214) 243-7404 (800) 808-5908, or Engine Components, Inc., 9503 Middlex, San Antonio, TX 78286 (210) 828-3131.

Valves - Superior Air Parts, 14280 Gillis Rd., Dallas, TX 75244-3792 (214) 233-4433.

Wing Tips - Hoerner design - Met Co Aire, P O Box 2216, Fullerton, CA 92633 (714) 521-4982.

Wing Tips - Drooped - Madras Air Service, 1914 W. Demers Dr., Madras, OR 97741 (503) 475-2360.

Windows (side) - Superflite, 2149 E. Pratt Blvd., Elk Grove Village, IL 60007 (800) 323-0611 (ready made) -plastic material (.080 Cell cast), Aircraft Spruce & Specialty (800) 824-1930.

Windshields - Airtex Products, 259 Lower Morrisville Rd., Fallsington, PA 19054 (215) 295-4115 or Superflite, 2149 E. Pratt Blvd., Elk Grove Village, IL 60007 (800) 323-0611).

Windshields, One Piece - Kosola & Associates, P O Box 3529, Albany, GA 31706 (912) 435-4119.

Wrenches - cylinder stud. Gibson Aviation, P O Box 880, El Reno, OK 73036 (405) 262-4880. (Common sizes - $20)(Allen sizes, $61.50)

Yoke Refinishing - Americoat Corp., 3715 US Highway 98 S., Lakeland, FL 33801 (813) 667-1035 or Profile Plastic Coatings, 2130 San Fernando Road, Los Angeles, CA 90065 (213) 227-8777. Sacramento Sky Ranch, 6622 Freeport Blvd., Sacramento, CA 95822 (800) 433-3564.

Other Addresses of Importance

Lieht Plane Maintenance magazine
75 Holly Hill Lane
Greenwich, CT 06836

Piper Aircraft Corp.
2926 Piper Drive
Vero Beach, FL 32960
(407) 567-4361 FAX 778-2144.

Teledvne Continental
P O Box 90
Mobile, AL 36601 (205) 438-3411

Textron Lvcoming
550 N. Main St.
Stafford, CT 06497
1-800-243-9856

Concerned About Engine Life

Jim Dunn, of Lebanon, Illinois, asked about flying techniques to extend the life of his 0-360 engine. His answer:

First of all, the rate of wear of an engine is dependent upon the rpm--an engine running at 2,250 rpm works much less than one running 2,450 rpm.

However, you need to balance this with the speed at which you will end up flying. As a general rnle, any engine speed with a constant-pitch propeller which causes the engine to run at 75 percent or less, should keep your engine purring and provide maximum performance with a minimum wear on the engine.

For engines with a constan-speed propeller, of course, the analysis is different. A slow speed with a constant-speed propeller results in much higher cylinder pressures within the engine which can subject an engine to a lot more wear than the speed. For these engines, an rpm somewhere in the middle of the recommended values for any given percentage of power, would be most beneficial.

As to your second question, the 0-360 engine is not unusually susceptible to cylinder shock, but, like all aircraft engines, this can be a problem. Certainly prolonged idle periods, followed by rapid increases in power, should be avotded. Of course, do not be so wary of this problem that you place your plane in danger of a crash due to timidity in applying power when needed.

Whenever descending, try to plan ahead to permit you to leave some power on while in the descent. This will make all the difference in the world and keep the cylinder temperature up to areasonable value. Also, avoid practicing forced landings as much as possible and try to keep some power on while you are doing so (remember that this will make the practice not as realistic as the real thing.)

Stainless Steel Brake Discs

I own a 1975 Cherokee Archer, N33666, and need to replace the brake discs. I am planning to keep the plane long-term and, consequently, am considering the installation of stainless steel discs instead of the standard carbon steel discs. The discs are marketed by Avpro, 1400 E. South Blvd., Montgomery, AL 36116 800-334-6359.

Have you or any of the members had any experience with these discs? Any information would be appreciated.

John C. Sparks
St. Louis, MO 63109

Stainless steel discs are made by several manufacturers, including Avpro. Unfortunately, there is some controversy concerning their use.

The stainless discs have been thoroughly tested by the FAA and are approved for many planes. However, Cleveland Wheel and Brake, which made most of the brake units and linings, insist that stainless steel discs are unsafe and

they refuse to warranty units which use stainless steel.

In their service bulletin, ESB-7013, Cleveland warns that stainless steel does not dissipate heat as readily as carbon steel and this may cause excessive heat which could carbonize and burn the linings to the point of failure.

Stainless steel disc manufacturers, however, dispute this and claim that Cleveland is merely attempting to protect its own replacement market for wheel discs - Cleveland does not manufacture stainless steel discs.

To make your own decision you should evaluate the type of flying you do. If you do normal flying in reasonably dry conditions, you probably should stick to the standard brake discs.

However, if your plane sits a lot, especially in wet weather or on moist grass, you probably would he better off with the stainless steel discs and their lack of corrosion.

Airspeeds and Procedures

Frank F. Nesson, of Woodside, New York, asked about airspeeds and procedures on his Cherokee 180. The answer:

We have never covered some of these points in print, so we will do our best to give you answers to your questions. Piper is a little skimpy about some details, hut the information is there.

First of all, there is no specific airspeed for lift off for either short or soft field takeoffs. The technique is to get the plane off the ground as quickly as it will fly under the circumstances and then remain in ground effect for a few moments to build up a safe flying speed.

Both maneuvers should be performed with flaps set at the second notch, 25 degrees, and not full flaps. With the short field takeoff. run the engine up to full power while remaining stationary using the brakes. Release the brakes and accelerate to 50 or 60 mpb and, after lift off, accelerate in ground effect to best-angle or best rate-of-climb, depending upon whether you have obstacles to contend with.

The soft-field takeoff is also standard. With flaps set as above, use full power and raise the nose gear as quickly as possible. Lift off as quickly as possible aid, once again, accelerate in ground effect to the best-angle or best rate-of-climb.

Engine failure in flight requires two considerations: maintaining the best glide speed to try to glide to a safe landing area, and attempting to restart the engine.

Piper suggest a maximum glide speed of 85 mph and recommends not allowing speed to drop below 80 mph at any time.

If time and safety permit, you may try to restart the engine. Remember, however, that your first job is flying the airplane in a safe manner.

Check the fuel selectorand switch to another tank. turn the electric fuel pump on, make sure mixture is full rich, add carburetor heat, check engine gauges to determine the reason for failure, make sure the primer is locked, and check the fuel pressure gauge.

If you have time, turn the magneto to the left, then right, and finally to both positions and also try varying the throttle and mixture settings. If and only if the propeller is not windmilling, you will need to engage the starter to attempt to restart the engine.

Also, if you inadvertently ran a tank dry, the engine will not restart after switching tanks until the fuel lines are filled, which will require about 10 seconds.

An open door in a Cherokee, is like an open door in any other light plane. If possible, your first priority should he to make a safe landing to permit a safe closure. If this is not possible, climb to a safe altitude before making any attempt to close the door. A partially open door will not affect flight characteristics, so the door itself does not create an emergency, although careless flying may.

To close the door in flight, slow the aircraft to 100 mph, close the cabin vents and open the pilot's storm window. If the lower latch is open, open the top latch, push the door further open, and then close it rapidly. A slip in the direction of the door will cut down the relative wind and make the procedure easier, if it can he done safely under the flying conditions.

One final emergency we should cover is a fire in flight. While very rare, you should have apolicy because of the seriousness of the problem.

First, try to determine whether you have an electrical fire (smoke in cahin, smell of ozone) or an engine fire. For an electrical fire. turn the master switch off, open vents, and turn off cahin heat. Land as quickly as possible.

If you have an engine fire, turn the fuel selector off, close the throttle, cut engine power with the mixture control and turn off the heater and defroster. Land as quickly as possible.

Fancy Pants Evaluation

By Stan Hines

Warrior N57SH has had the full treatment: gap seals, re-contoured airfoil, hinge fairings and fancy pants and I am satisfied with the results.

Most of our flying consists of short hops around Florida. We did take one trip to North Carolina for our daughter's wedding. (Incidentally, Raleigh has auto fuel - just ask for "B-Gas").

Weather prevented a check on the northbound leg, hut our return was CAW. Turning 2,425 rpm at 6,500 feet (7,000 density altitude) we were showing a true airspeed of 135 mph. At 2,500 rpm we showed 140 mph.

This was with three people and starting with full tanks (2,250 pounds). From Piper graphs at the above conditions 2,425 rpm is a little over 60 percent power, while 2,500 rpm is 65 percent (burning 8.0 gph).

Back to the Fancy Pants. I found them to take a little longer to fit than anticipated although the instruction, 'including diagrams, were very good. The most difficult part

was getting the new strut "Cuffs" to fit inside the pants. They had to be recut at the top to assume the correct angle inside the new fancy pants. This made them too short to prevent them from popping out with the gear fully extended.

This was corrected by adding about one inch to the bottom to assure a safe overlap. I dreaded the thought of removing them for ainuals, but found out (from a tire blowout) that after they have been on for a while they require only a few minutes more than the original pants for removal aid replacement.

Cherokee "250" Is A Conversion

The Cherokee 235 owned by Bob Frischknecht, of Big Bear City, California, is not really a 235 at all anymore - it is now a 250.

Its engine has been converted to a 250 and it has less than 300 hours on that engine conversion. N9483W also has a new propeller, all new Narco Avionics, a new custom interior, and new windows. The new paint was applied by Jim Hatfield, owner of Corona Aero Refinishers at Corona Airport.

Performance is outstanding. On a standard day at Big Bear (altitude 6,750 feet) this beefed-up Cherokee will climb at 120 mph at 1,000 feet per minute.

It cruises at 65 percent power at 172 mph and bums fuel at 11.5 gph. Useful load is 1,437 pounds with an 84 gallon fuel capacity. It has a range of 1,200 miles or seven hours of flying.

Bob sent some of the paperwork on this plane. The alteration was performed by Lynn's Aircraft Engines, of Long Beach, California, with the job approved on an FAA 337 form.

The cost of the change, including overhaul of the propeller at the sane time, cane to $14,480. Materials for the engine conversion came to $7,758.78.

Changed were the cylinders, pistons and rings, valves, magnetos and spark plugs. The engine was changed from a 0-540-B4B5 to model 0-540-A4B5. Field approval was given to the plane on September 16, 1983

Bob commutes each day between Big Bear and his business in Palm Springs. Flight time for the trip is 19 minutes. He also flies for the Palm Spring Police Aero Squadron and has displayed 9483W at several air shows aid has won three trophies so far.

It is always fun when people try to guess the age of this plane. Most think it is a 79 or 80. Guess again!

Warrior Performance Chart

By Stan Hines

I love my Warrior, N57SH, a 1974 PA-28-151, but I found that the performance charts in the owner's operating manual were of little use outside the cockpit and no use at all in the air. Although some planes have a power setting table on the sun visor, mine does not.

After flying for awhile without such infomiation I decided to try to make some sense out of the given data, I suppose that I could have just made up a table for the sun visor, but I like to use charts better.

After numerous attempts, using Piper data, a surprising thing happened; 1 developed a chart that really helps me in the cockpit and it is made using all straight lines.

Attached is a copy of this chart which I photo reduced and carry in the pocket by the pilot's seat. Even reduced it is easy to read while flying and is a great comfort to me knowing I am getting the desired performance.

Using this chart is very easy (see the example). It is used most often to find the rpm needed to give the desired power setting (fuel flow) after reaching cruise altitude.

Obviously, these data can be used in various combinations as desired without any cockpit calculations, except for density altitude.

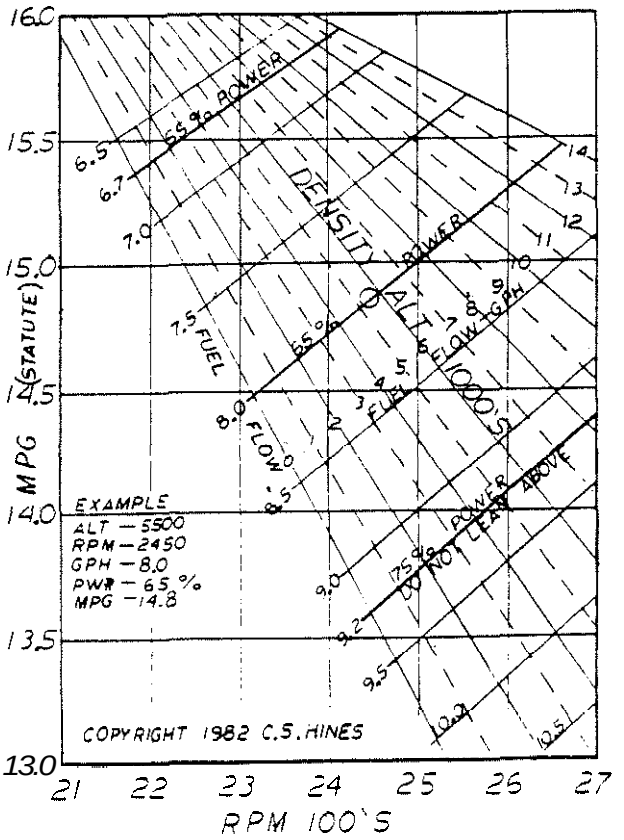

Step-by-step: 1) Read density altitude from altitude conversion chart, after reaching your cruise altitude; 2) Find density altitude line on chart; 3) Locate its intersection with chosen power setting (fuel flow); 4) Read down to find rpm.

In the example given the density altitude is 5,500 feet, the power setting is 65 percent (8.0 gph) which gives the rpm to use as 2,450. That is all there is to it.

Before 1 get a lot of letters about specific points on the chart let me say that the Piper "best power curves" as used for my data did not always agree with themselves. Also, some distortion may have been introduced by sticking with straight lines.

Nevertheless, I find it sufficiently accurate to give

predictable results and that errors, if any, tend to be on the safe side. Individual results may differ due to engine condition or pilot experience and leaning technique.

If an "Altitude Conversion Chart" is similarly reduced in size, readers will find that the two can be fitted back to back in a photograph protector plastic so that they will have everything in one packet ready for use.

Made Own Windows

By Timothy F. Foley

I purchased a 1972 Cherokee PA-28-140, 2397T, about 15 months ago and, although the plane was in excellent condition with only 1,450 total hours, each of the two rear windows was badly cracked and glazed.

Wanting to replace these I checked out the cost from Piper as well as various aircraft glass houses. The best I could come up with was $98, not including installation.

Although it appeared these rear windows might be "molded," I found when they were removed they are actually flat plastic. I went to a local plastic firm, TAP Plastic, and they cut to size, provided the same gauge and provided the same gauge of the sane composition. Total cost for the plastic was $7.74 (1986).

Weather stripping was purchased from Piper, along with the necessary sealant, for about $9. Total cost was $16.74 versus the windows only at $98.

The installation was a "piece of cake"--removing a few screws on each side, cleaning off the old dried sealant and replacing it. Overall, I spent about 3-1/2 hours on the project, including the time it took to go get the plastic cut.

These windows have been in for more than a year and not a leak. It is rare that one can beat cost when it comes to aircraft, however, this time I think I beat the system.

Has Cures for Several Problems

By Ken Borzage

I have been a CPA mentber for several years. When the magazine comes in, I read it cover to cover. Often when I read of problems people write in about. I say "I know how to fix that." So here it goes...

Brake Problems: The O rings in the master, toe and wheel cylinders are to seal against leaks only. Most trouble with no pedal, low pedal, hard time bleeding air, etc., is caused by the Dyna-Seal in the toe and hand brake cylinders, nothing else.

A simple way to bleed brakes:

1. Go to the local pet store and purchase 30 feet of 3116-inch clear tubing.

2. Loosen the "bleed" fittings on wheel cylinders and attach clear tubing to the right and left wheel cylinders,

3. Run clear tubing up to the brake reservoir.

4. Fill the reservoir with fluid.

5. Pump the hand brake and both toe brakes and watch the air bubbles rise in the tubing. Continue to pump until no bubbles rise in the tubing.

6. Tighten the "bleed" finings and remove the clear tubing.

7. You will now have solid brakes with NO air. Simply refill the reservoir to the normal level.

Ammeters: Fluctuating ammeters should be taken very seriously in a Cherokee that has not been modified with the new-style shunt-type ammeters. If it has not been changed it should be as soon as possible to prevent overheating of the wires and possible electrical fires under the panel.

Hard Starting: Many hard starting complaints are due to the magneto "P" leads being hooked to the ignition switch improperly. Here is how to check this safely:

1. Remove all top plugs.

2. Temporarily hook up the leads back to the spark plugs and lay the plugs against the engine ground so you can see the plug arc at the plug gap.

3. Put the mags first on the left, then right. The left mag has the impulse and it is on the pilot's side. Have someone turn the prop and be sure of the following:

a. The plugs whose wires come from the left mag arc when the ignition switch is in the left position, and likewise for the right mag plugs.

b. If your starter is on the key. have someone hold the key in the "start" position (Master switch OFF) and make sure the left plugs arc and the right plugs DO NOT ARC when the engine is turned by hand.

Many people have trouble starting, and wrongly change wiring, battery, starter, etc., when the problem is the mag leads are reversed or the switch is not good. The starter is trying to turn the engine when the plugs are firing 25 degrees sooner than they should.

Low or slow oil pressure on starting: Bleed the air from the oil line to the oil pressure gauge at the gauge.

Bolts that seem to work loose: Have the propeller removed and rebalanced if it has more than 500 hours on it. Recommendation is 1.000 hours between checks by a certified prop shop. The average cost is about $25, complete.

The Battery Box: The ground is made UNDER the box. Remove it and clean under it. Spray on some WD-40 and reinstall the bolts. Be sure all the drain and vent holes are clear. A clogged vent allows acid fumes to collect and invites corrosion.

"Wing Ding" Information

By Lloyd LaPlant

Regarding the "Wing Ding" inquiry by member Belanger, I have in my files an old ad out of Trade-a Plane that lists the item at $22 (1986). I suspect it did not sell well, because I have not seen the ad again nor have I ever seen one installed on a Cherokee. The address was Pro-Flite, PO. Box 998, Vero Beach, FL 32960.

Caring For The Lycoming 0-360

By Keith B. Hopkey

We fly a 1977 Archer II and couldn't be more satisfied. Our A4M presently has 2.010 hours (TTAE) and my mechanics at Whitman Airport (Able Air) say there is no reason I cannot expect 2,200 - 2,300 hours based on present engine condition. Oil is changed now (since 1950 hours) every 25 hours. Pressure is at the high end of the green and it will require a quart at 12 to 14 hours. Fuel bum is consistent at an average of nine gallons per hour. All signals to watch, for me, are still positive. Compression was 72, 74, 75, and 77 last check.

I was advised not to baby the engine and I am very careful regarding cylinder shock. In cruise flight I set my rpm at 2,450 - 2,500 and lean 25 - 50 rich of peak EGT. Descents are planned to be powered, hopefully reducing risk of cylinder shock.

Terry, I realize riot all engines are alike and I am not so bold as to say my procedures are right for other engines. It sure works for N687OF. I might also add, I cannot remember the last time I primed my engine to start it. None of the Cherokee hard-starting problem.

Regarding another letter in the July issue regarding a gas smell in the cockpit for small periods of time. I also experienced that. My mechanic suggested packing the fuel selector. He did and the odor disappeared.

Finally, to the gentleman a few months ago who said he wouldn't sign off or fly in a plane beyond TBO: I respect your opinion and disagree with you. If a plane is well maintained and you have confidence in your mechanic, I subscribe to the adage. "If it ain't broken, don't fix it."

Fuel Smell; Better Locks

By Byron Brammer

I had the fuel smell problem in both my Cherokee 140 and in my Archer. Each time the problem was fuel leaking from the fuel vent line The vent line is aluminum tubing that comes out of the filler neck into a rubber hose coupler. It is then coupled to another tube which runs to the rear of the tank and then back to the middle where it again couples with a rubber hose and exits the bottom of the wing.

On both my planes the hoses used to couple the tubing looked like windshield wiper hose instead of fuel line. At any rate, the coupling hoses were rotten.

Replacing these hoses did the trick and I no longer had the problem. The tanks are not hard to get out, but there are some tricks and you should be a rated mechanic if you do the work.

I once had another problem on the 140 and that was the O ring on the fuel tank selector valve. When I would change tanks I would have the smell. Replacing the O ring solved that problem.

One of the readers wanted information on better locks for his Cherokee. I use the round "ACE burglar alarm type. They can be purchased from any good locksmith.

The latch on the back of the lock may present a problem. I had a machinist friend make one that fit.

If the owner has time a better lock is made by Medeco Security Locks, Inc., and can be ordered. It is best to take the lock from the plane into the locksmith so he can match the length and turn direction exactly.

Manual, Remove Air Conditioning

We just purchased a 1973 Cherokee Cruiser for our flying club and are having fuu getting checked out in a low-wing Piper. We had a Tri Pacer for 19 years.

We have three problems that maybe you or some of the readers can help with. First, we would like to get an owners manual for the Cherokee Cruiser. If anyone knows where we could get a copy we would appreciate it.

Second, our Cherokee is IFR equipped and has lots of other goodies on it to bring our useful load down to 690 pounds. We have air conditioning that we do not need very much in Wisconsin.

We would like to know how much weight we would gain by removing the compressor, hoses and the evaporator system. Also, any other problems we may run into in removing this system.

Third, we have readabout many of the performance modifications for the Cherokee. Which of these seem to he the best to improve the takeoff and climb performance?

Ken Whyte
Brookfield, WI 53005

For a manual for your plane I suggest you contact ESSCO. 426 W. Turkey Foot Lake Road, Akron, OH44319. (216) 644-7724. These are the people who specialize in owner's and maintenance manuals for aircraft.

The air conditioning system in your plane adds 67 pounds to the total weight. Removal of the system is a common procedure and I have heard of no performance problems resulting from the process.

To increase performance, there is no substitute for power. Increased engine horsepower, however, is an expensive proposition. It still, beats any other modification.

The Horton STOL System is also good and flap gap seals reportedly help a little in the climb, but can not make nearly as much difference as a few additional horses under the cowl.

Laminar Flow Report

By Richard A. Petty

I purchased a PA-28-161 as a student in March of 1983 and have put more than 500 hours on it. However, as one gains experience the urge to move up to something more powerful aid faster strikes most of us.

After much thought and study I decided to keep the reliable bird and contacted Laminar Flow Systems to help me out. Robin Thomas was most helpful and provided refer-

ences.

I received the kit in a timely manner and had few problems with the installation. I am very pleased with the results and now leave 172s in the dust, both in climb and cruise. Waiting for conditions close to standard, I got 130 knots at 6,500 at 75 percent power. I have not yet attempted to determine the increase in service ceiling.

I read about some of the complaints people had about Robin and heard others during my discussion with several references as well as those I found on my own.

I offer a suggestion to those who have already purchased the modification, but have complaints regarding installation. Pick up the telephone and talk to Robin. I believe he will be more than happy to help you, I found several individuals who were having problems with installation, but none indicated he asked Robin for help.

I have received several calls from pilots who have seen my "new" Warrior at San Jose Muni. Each expressed interest in the Laminar Flow Systems modification and I gave Robin favorable recommendations. Plus, it makes your Cherokee look better!

I guess it boils down to whether the extra 20 to 24 mph is worth the approximately $3,400 purchase and installation cost. I believe the savings in not moving up to something a little faster and more expensive will be realized over the next few years - in insurance premiums alone.

Asuggestion for those with vent window latchproblems. I simply drilled a small hole in the window and used a screw to hold the latch in place. I found no glue to solve the problem.

Inflatable Seals, FI Starts

I have a 1974 PA-28-235. Here a few questions.

Door seals--does the company that makes the inflatable door seals for Cessna make them for Pipers? If so, what is their address? Any one have any answers for door seals?

Hot starts--why do we have to re-prime, even with avgas? If you should run one tank dry and switch tanks, do you have to re-prime?

The left tip tank--the fiberglass underneath has blistered paint in small little round shapes, with a dot in the center. Any ideas?

Robert D. Davidson
Reno, NV 89502

Inflatable door seals which fit Cherokees are available from Bob Fields Aeroaccessories, 340 Hangar E. East Santa Maria Street, Santa Paula, CA 93060. (805) 525-6236.

The seal comes with a rubber bulb which you squeeze to inflate the seal. The company claims a 4 to 14 db noise reduction in flight.

The last prices I saw indicated prices ranging from $300 to $500 (1987). depending on model.

The reason you re-prime your engine, even when hot, is to insure that your fuel mixture is proper for starting. Unlike a carburetor, a fuel injection system cannot guarantee that a fuel charge will be at a proper ratio of fuel and air to permit proper combustion.

You prime to insure that the engine is in a rich condition at the beginning of the starting procedure. The mixture then becomes gradually leaner due to the mixture being in idle cutoff. When the proper ratio is achieved, the engine starts.

Because of this condition, it is a good idea NOT to run a tank dry on a fuel injection engine. If you do, however, you should not have to re-prime, as the propeller should be windmilling and this will in any event prevent you from flooding the engine. The engine should start when tanks are switched, just as on a carburetor equipped engine, however, you should switch on the auxiliary fuel pump if you do not show adequate fuel pressure.

Finally, I checked with Globe Fiberglass, Ltd., regarding your blistering. They indicated that this could be a local condition, caused by excessive heat, or it could result from delaminating of the fiberglass.

The only cure is to sand it and then check for delamination. If none is found, the tank should be repainted. If you have additional problems, contact Globe Fiberglass at Lakeland Airport, Lakeland, Florida.

Materials List For Painting Plane

Ever wonder what it would take in the way of materials to refinish you aircraft? This chart should give you a good idea.

Unfortunately, it will not give you much of an idea as to the amount of time and effort required which is plenty.

Acrylic Lacquer:
- Wash Primer System:
  - Wash Primer - 4 quarts
  - Acid Diluent - 2 pints
  - Thinner - 4 quarts

Epoxy Primer System:
(preferred method)
- Epoxy Primer - 4 quarts
- Epoxy Catalyst - 4 quarts
- Epoxy Primer Reducer - 2 gallons
- Acrylic Color - 6 gallons
- Acrylic Thinner - 10 gallons

Polyurethane System:
- Epoxy Primer - 4 quarts
- Epoxy Catalyst - 4 quarts
- Epoxy Primer Reducer - 2 gallons
- Polyurethane Color - 2 gallons
- Polyurethane Catalyst - 2 gallons
- Polyurethane Reducer - 2 quarts

Static On ADF

Gary W. Jones, of Kansas City, Missouri, asked about cures for static on his ADF, especially when the plane passed through 400 feet. Dave Graves answered as follows:

If you don't mind let me answer this letter with a bit of good old-fashioned information whichmight be helpful to someone else who has a similar problem with an ADF.

1. Static or interference can be identified by its sound! Alternator noise is a whine. Ignition noise is a popping sound as the plugs fire. Noise caused by corrosion is a raspy type.

2. The 400 feet can have no possible play in the story! The radio does not know if it is 400 feet or 400 miles.

3. I will suggest the following cures:

a. Be sure the grounding of the sense antenna cable is good at the antenna end.

b. Since the bolt through the sense antenna insulator (atop the cabin) is steel, it will corrode mid cause noises. It is easily replaced.

c. You can buy a filter Radio Shack sells for CBs. It is a choke and capacitor arrangement and it should be installed RIGHT AT THE ADF and be grounded at the ADF case in the rear. It goes in the A plus line wliich is one of the three ways interference can enter the enclosed box the ADF sits in. Antenna-Loop-A plus (3).

d. If there is still noise to a great extent after all this, think back to the problems reported otherwise. The sorry grounding of the battery cables, and the different metals situation at both ends of the starter cable.

Lead post on the battery to steel clamp on the connector to aluminum cable (soon to be copper). And then going to the same situation at the other end. And I think the ground wiring is even worse, with a steel bolt tie to ground with the battery on the frame.

Any time there is dissimilar metal with electricity going through it you have electrolysis, and this to a radio is noise.

e. The electronics shop should have had ways to find the noise. A little AM radio held near the plane and the engine, here and there, might find the noise if generated by the plane at all.

I a n betting on the corrosion answer. I have written to quite a few people with this problem and suggested cleaning up the act. I believe all were cured except one or two who used the filter method.

Needs Root Seal

I have had a hard time finding the wing fillet molding for my 1962 PA-28-150 Cherokee. Central Aircraft Parts is out of stock and no help. The Piper dealer has the same story.

Many local owners have tried. Any suggestions for the rubber wing root seals that many of us need?

Robert B. James Jr.
Falls Church, VA 22046

The wing root seal is part number 187-526. I contacted Piper and they indicated that they are available. Your Piper dealer may need to order them, however. If your dealer cannot come up with them, try your Piper distributor.

Be sure you order one kit for each side.

Piper "Prohibits" Mogas

I am very upset about Piper Service Bulletin #855. I fly my Cherokee 150C as much as I can afford, which is not much. Now it looks like Piper is going to cut that time in less than half.

The advent of mogas is the only reason this retired 68-year-old flying nut could get back into the "main stream". I hope you have plenty to say about this matter in upcoming issues.

Charley Marcussen Sr.
Slidell, LA 70458

For those members who have not seen Service Bulletin 855, I am reprinting it in below. It applies to all Piper piston powered aircraft and Piper considers the bulletin "Mandatory", although this has no legal force or effect.

"The use of automotive type gasoline ("Mogas") in General Aviation aircraft is believed to be a contributing factor in numerous accident investigation reports. Piper Aircraft Corporation has found no method of defining the formulation and physical properties (such as vapor pressure) of automotive gasoline in general, within any usable tolerance. The compatibility of automotive fuels with sealants, gaskets, composite fuel tanks, hoses, fuel pump impellers and other fuel system components, as used on aircraft through the years, is unknown. In addition, there is evidence that Mogas will attack certain fiberglass materials used in fuel tanks with resultant contamination and blockage of the fuel system.

Piper Aircraft corporation does not approve any fuels other than aviation-grade gasoline with the minimum octane specified in the Airplane Flight Manual (A.F.M.), Pilot's Operating Manual (P.O.M.), or Pilot's Operating Handbook (P.O.H.) and original placards affixed in the area of the fuel filling port.

INSTRUCTIONS: Service aircraft with fuel meeting the fuel requirements of the certification basis of the original type design. Refer to the applicable A.F.M., P.O.M., or P.O.H."

This, then, just about sums up Piper's feelings about the use of auto gas in aircraft. And Piper's view is not without basis. Auto fuel has been cited as a potential contributing factor in several accidents and we are all aware of reports of temporary engine shutdown when operating with auto fuel.

Nonetheless, thousands of aircraft owners are operating their aircraft on auto fuel with an FAA approved STC, and, despite the "Mandatory" language of the service bulletin, they may continue to do so.

Piper, of course, would like to discourage the use of auto fuel because in the event of an incident, Piper would surely be involved in a lawsuit. Auto gas, from the company's point of view, is just one additional factor which could potentially create just such an incident. Obviously, Piper would attempt to avoid any liability where a plane using auto fuel was involved in an accident.

Also, it should be obvious that Piper would attempt to avoid any warranty coverage in a plane using auto fuel so long as there is any possible connection between the auto fuel and the warranty claim.

Nonetheless, the FAA STC still permits Piper owners to use auto fuel in their planes at their own discretion and the service bulletin will not change this fact.

Arrow Owner Has Tips

By Ramon Pabalan

Although1 am a neophyte Cherokee owner, I would like to share some of my experiences in the short year I have owned my non-turbo, 3,400-hour, run-out Arrow III.

Before tlie service bulletin came out. I had a melt down of the positive tenninal on the battery when the connector failed. Those wires sure generate a lot of smoke when they bum. Sun Battery Company, here in Jacksonville, welded a new tenninal for only $14 when they determined that the battery itself was still good.

What we found was that the bolt had loosened and then corroded. The connector, too, corroded, causing the resistance and heat at high-current loads when starting. That three-year-old battery finally gave out last month and Sun Battery sold me anew aircraft battery for $42, acid, charge, warranty and tax included.

Needless to say I am changing to copper cables as recommended. After many days of phoning found Wilco, Inc. (800) 523-7593) had 2 gauge mil spec wire for only a dollar-fifty a foot, and connectors for a dollar each. Dallas Avionics (800 241-3739) also has connectors. Total cost for 23-feet of wire and connectors? $48 (1987)!!

Three months ago on a trip up the east coast, I began losing electric power slowly. The annunciator light never came on and the ammeter showed the battery being charged, as checked by shutting the battery switch off After six hours of flying I didn't even have enough power for the landing light or to lower the gear.

A cracked alteniator mount allowed the alteniator to spin just fast enough to show a charge on the meter and keep the warning light off, but not enough to charge the battery. Piper now sells a new, stronger mount and that plus towing, anew alteniator belt, dye-penetrant test on the block for alternator-induced cracks, cost me more than $800 at East Coast Aviation, in Bedford, MA.

Labor alone was $670. Sound like a lot? In retrospect I think so. But the lesson is to check the mount or change it altogether before failure or a cracked block occur.

The ammeter AD kit is apoor fix. Sure, I may have a fire, but the needle does not zero and the shunt is very bulky to install. Sorry, Mr. Weick, but this fix is Piper engineering at its worst.

Check your brushes on the motor for your landing gear pump. Blushes only cost a few dollars at the FBO - much cheaper than a new pump motor - a $thousand what?! - if the commutator gets eaten up.

While searching for new engine mounts I found some Lord J9613-45s much cheaper at Wil Neubert Aircraft Supply that would fit. "But are they the same as the stock J9613-40s?" I ask. "Don't know," said Neubert, so I called the engineers at Lord in Erie, PA, and they tell me the 45s have 100 pounds LESS shear dampening than the 40s.

Ergo, stick with the original J9613-40 if that is what is called for unless you want your engine to droop and shake a little more. Besides the 40s are "only" $190 for four at Independent Aviation Supply.

Forget the Barry Controls STC PMA engine mounts. For my engine they were almost twice the above price from their only distributor, Aviall, even though they are supposed to be just as good as Lord but without the jelly centers.

In spite of these problems. I am convinced the Arrow is the best SE retract for my needs. In the year I have had it I have flown to Iowa, Boston, the Bahamas, Cancun, Mexico, and the Cayman Islands.

I only bum a quart of oil in six hours and have averaged 8.15 gallons-per-hour during the 225 hours I have flow1 it, including long cross-country trips and my IFR training. Total cost is about $55 per Hobbs hour, everything included, which is not bad for an average of 132 knots TAS at 7,000 feet.

Increased Power: Analysis

By Thomas C. Bowie

When I bought my Cherokee 150 I was living in Napa, California and the 150 horsepower four-place Cherokee was a good choice for that part of the country at sea level. Now that I am living in Colorado, where the density altitude at my home field is more than 7,500 feet for more than half the year, tlie utility of the 150 horsepower Cherokee is seriously restricted.

The 0-320-E2A engine in my Cherokee 150 has accumulated 2,700 hours total time since new and has never had tlie crankcase apart nor any cylinders removed in these 21 years.

Even though the compression is 76180 or better on all cylinders and it only burns one quart of oil in six to eight hours, I feel it is time to do something with that engine no matter what other thoughts I have about inadequate power for this high altitude environment.

One change that comes to mind is to convert the

150 horsepower 0-320-E2A at overhaul into the 160 horsepower version. I discarded this idea since it would only marginally improve the performance I have now. Another change is to go with an increase in horsepower with a conversion such as the Avcon 180 horsepower and constant-speed propeller modification. This sounded like areal good idea to me at first, but then I thought what would he the advantage of going to the trouble of converting my aircraft when I could trade up to a Cherokee 1807 The following is my analysis of what to do.

Looking at the data in the PA-28-180 pilot's operation handbook, I see that the maximum rate-of-climb at sea level is 750 fpm and maximum cruise speed (TAS) at 7,000 feet and 75 percent power is 143 mph.

Avcon advertises that the converted Cherokee will have a maximum rate-of-climb of 950 fpm and will cruise at 150 mph. So the big difference between the Avcon converted 150 and a factory original Cherokee 180 is a rate-of-climb improvement of a whopping 200 fpm, a seven mph faster cruise speed, a constant-speed prop, and a 200 pound lower maximum legal gross weight.

The converted Cherokee will still be limited to 2,200 pounds maximum gross weight by the Avcon STC, but the factory original 180 will he 2,400 pounds. The maximum legal weight of 2,200 pounds for my converted 150 would be all right for me and I would still be able to operate with the resulting useful load and full fuel tanks 98 percent of the time. I would realize the full advantage of the extra 30 horsepower.

THOMAS C. BOWIE

Cherokee Cost Comparison Analysis

Used PA-28-180 Option		AVCON Conversion Option	
Used PA-28-180	$15,000	AVCON Kit	$ 2,650
		Propeller and Governor	5,500
		O-360 Core	2,500
		O-360 Overhaul	5,500
		Installation	1,500
Subtotal	$15,000	Subtotal	$17,650
Less sale of PA-28-150	-$ 5,000	Less sale of O-320 Care	-$ 2,500
Net Cost	$10,000	Net Cost	$15.150

The Avcon conversion really shines in the takeoff and climb regime, because the constant-speed propeller allows the engine to develop maximum rpm and, hence, horsepower right at the beginning of the takeoff roll all the way to cruise altitude. The fixed-pitch propeller on the Cherokee 180, meanwhile, will he turning 300 to 400 rpm slower during the take off roll through climb and, hence, the engine will be producing 10 to 15 percent less horsepower. This, of course, assumes the standard factory propeller is on the Cherokee 180.

This is a red herring in the comparison, however. The Avcon conversion maximwn gross weight is 2,200 pounds while the stock 180 is 2,400 pounds. If the Cherokee 180 were flown at 200 pounds under maximum gross weight, it will perform closer to the Avcon values, although the constant-speed propeller will still have the advantage.

I estimated the performance values of the Cherokee 180 at 2,000 pounds gross weight and have prepared a table showing these estimates plus the Piper book values for the standard PA-28-140115011601180 and the Avcon advertised performance values for a converted PA-28-140. The Avcon rate-of- climb advantage of 200 fpm mentioned before reduces to 140 fpm in the Cherokee 180 flown 200 pounds below its certified 2,400 pounds. This is still a good advantage, but the figures cause me to wonder if the gain is cost effective.

Next, I took a look at cruise performance. In order to really take advantage of the constant-speed propeller at cruise you need to have amuch reduced parasitic drag. With the Cherokee's wheels hanging in the wind that factor is not going to change much. Note that at cruise (75 percent at 7,000 feet) the Avcon constant-speed propeller and 180 horsepower engine will give a seven mphadvantage over the stock Cherokee 180.

This difference is due to two things. One is the increased efficiency of the constant-speed propeller and the other is the difference in gross weights giving lower induced drag for the Avcon conversion. I do not have any data on the cruise speed of a Cherokee 180 flown 200 pounds under gross weight, but an estimate is that it would be anywhere between one to five miles-per-hourfaster than the book value because the induced drag is less at lower gross weights.

There are a few other things to keep in mind before deciding to convert to a constant-speed propeller. The penalty of the constant-speed propeller, aside from the initial cost, is the weight penalty (less useful load at legal gross wetght) and the recurring costs

Most popular constant-speed propellers suitable for the Cherokee have Airworthiness Directives mandatmg overhauls every few years regardless of use and this will amount to an additional maintenance cost burden throughout the

	STOCK PA - 28 140	STOCK PA - 28 150	STOCK PA - 28 160	STOCK PA - 28 180	AVCON PA-28 140 CONVERTED TO 180	STOCK PA - 28 180 200 lb under max. gross
GROSS WEIGHT	2150 lb	2150 lb	2200 lb	2400 lb	2200 lb	2200 lb
TOP SPEED (mph)	139	144	146	152	158	(estimates) 154
CRUISING SPEED (mph)	133	135	137	143	150	145
STALLING SPEED (mph)	55	'54	55	57	55	55
TAKE OFF RUN SHORT FIELD (feet)	800	780	740	720	550	660
RATE OF CLIMB (feet per minute)	600	690	730	750	950	810
SERVICE CEILING (Feet)	14,300	14,900	15,800	16,400	17,700	17,700

years. The Cherokee 180 will be a stock, unmodified factory aircraft with full legal 2,400 pound gross weight capability if needed.

While going though these comparisons it became obvious to me there will be a dramatic improvement in my aircraft's performance with Avcon engine swap if the decision were made to upgrade. The conclusion I came to on the efficacy of making the Avcon swap is whether or not I think it is worth the extra performance the Avcon conversion offers over the cost of acquiring a PA-28-180.

My cost estimates show me that the Avcon swap, though very desirable, will probably cost me $5,000 more than a trade up to a Cherokee 180 and will not be worth the expenditure to me. This will not necessarily be true for someone else whose Cherokee may have new paint, fresh upholstery and perhaps a lot of cash in a new avionics panel.

There may also be the emotional factor to consider where you may just have a strong bond to your favorite Cherokee.

Gap Seal, Turbo Plus Report

By J. R. Corbett

I have had not one, but two Pipers with the Knots-2-U gap seals installed and I swear by them.

I had a 1974 "6" (300) that cruised 165 mph at 65 percent - 15 mph more than its previous unmodified condition. All of this in the high-density west. I kept N63146 for more than four years and flew her coast to coast.

I now have N79GH, a Turbo Lance, which I purchased in January, 1985. I picked her up in Oklahoma, flew to Florida the sane day aid three days later to Illinois to have the complete Knots-2-U kit installed. I noticed a 10 knot increase in comparative cruise speeds, and now I can climb out 700 fpm at 120 KIAS. I had the hinge fairings installed a year later and noted a two to three knot increase.

I had the Turbo-Plus intercooler kit installed in July, 1986. I noted an approximately 1-1/2 to two gph increase in fuel economy for the same speeds. I now cruise in the yellow arc at 75 to 80 percent power.

It is too bad that Piper did not clean these dirty birds up a little before they shoved them out of the nest. Although flying is expensive I manage to fly approximately 200 hours per year with my "Saratoga performing Lance", for a lot less money.

Wing Spar Service Bulletin Update

By Ernie Colbert

I recently spoke with Ron May at Piper in Vero Beach and he advised me that my aircraft was not included in Service Bulletin 789A concerning the inspection of the wing spar. He stated that the Cherokee 140 category was affected through serial numbers 28-7325460 to 28-7325459 which is in the year 1973. Starting withnumber 28-7325460 the bulletin does not apply.

I was not quite satisfied with this explanation and asked to be enlightened as to why the more recent serial numbers, from 1973 on, were not affected. He told me that starting with the model after 28-7325459 in 1973 that the wing spars had been corrosion-proofed and corrosion was not as likely or even suspected after the 1973 model.

He did say, however, that it is always a good idea to check corrosion on annual inspections anyway. So, in the Cherokee 150 models the bulletin is not applicable and not all Cherokees are affected, as previously stated.

It is wise for all Cherokee owners to consider this compliance mandatory, whatever type Cherokee you might happen to own.

The exact serial numbers are given in the bulletin as follows:

PA-28-140	28-20000	28-7325459
PA-28-1501160	28-01	28-4377
PA-28-180	28-671	28-7305433
PA-28-235	28-10001	28-7310155
PA-28R-180	28R-30004	28R-7130013
PA-28R-200	28R-35001	28R-7335264
PA-32-260	32-1	32-7300041
PA-32.300	32-4000	32-7340130

Compliance with the bulletin is required within the next 100 hours or to coincide with the next regularly scheduled inspection, whichever occurs first.

All instructions necessary to comply with the service bulletin are contained in the Inspection Access Hole Kit, Piper Part No. 765-106V. The kit does not apply to the PA-28R-180 and PA-28R-200 aircraft.

Inspect the aft wing spar area at the attach fitting for corrosion.

On PA-28R-180 and PA-28R-200 aircraft, remove the contoured inspection access plate on the inboard side of each main landing gear well. Though this access hole conduct the inspection utilizing a light and a mirror.

Determine the extent of corrosion, if present. aid required by inspection, install the Aft Wing Spar Modification Kit, Piper Part Number 764-998V, per instructions contained in the kit.

The material required: One Inspection Access Hole Kit, Piper Part Number 765-106V for each wing (except on PA-28R aircraft) and one Aft Wing Spar Modification kit. Piper Part Number 764-998V if required as determined by inspection.

This then, is what is required by the service bulletin. Note the Arrows are subject to inspection and wing modification if corrosion is found. The access plate kits are not necessary, however, because these planes already have an access panel.

Prop Analysis Explains Performance

By Robin Thomas

A couple of days ago I received the December issue and came upon the very challenging letter from Mr.

Scott Johnson, in which he showed rather conclusively, it seemed, that the top speed achievable by a Cherokee with a 60-inch prop would only be 153 mph at 2,700 rpm.

Intrigued by this comment, I measured the prop pitch on my Cherokee 140 to see why, when it is supposed to be 58-inch pitch, it is able to cruise at 155 mph at 2,700 rpm instead of at less than 148 mph as the numbers would suggest.

1 found that at the 75 percent position the pitch was 18 degrees, which is a pitch of 58 inches, considering that the angle is taken from the flat underside of the blade. So far, so good, hut taken at face value this would mean that my maximum speed at 2,700 rpm would have to be less than 148 mph.

I am in a rather unique position, because I have extremely accurate instrumentation on my Cherokee such as both analog and digital tachometers, and both analog and digital airspeed indicators, all checked by strobes and adjusted. So I really know for sure that my cruise speed is 155 mph at 2,700 rpm.

What is the explanation? It lies in the examination of the airfoil section of the prop, which is similar to a Clark Y. First of all, the attack-of-attack of the prop should not be measured from the flat underside, but from the leading edge to the trailing edge, and doing it this way will yield an additional two degrees pitch.

This means that the true pitch of a 58 inch prop is really closer to 63 inches, according to my slide rule.

Further examination of the Clark Y airfoil numbers show that to get neutral lift, the pitch has to be set at minus five degrees. So the truth is that a 58 inch pitch prop really has a zero thrust pitch of around 82 inches and will still be producing some thrust up to a sped of 209 mph at 2,700 rpm!

I am not quite sure that my figures are 100 percent accurate. I am not an expert on propellers; that is the best I can do. I hope someone who is an expert will give us a more exact picture. But at least they show how a Cherokee can go impossibly fast and not exceed the tachometer red line.

Copper Cable, Ammeter Compliance

By Frank L. Wilcox

I recently completed replacement of the aluminum cables with copper cables on my 1978 Archer II along with replacing the ammeter in compliance with AD 86-17-01 and I thought I would pass along a few comments to add to the many I have read in past issues of The Cherokee.

I replaced the battery cables with the kit supplied by Bogert Aviation, of Richland, WA. I found the cables supplied to be of excellent quality and all exactly the same length and with the same size terminals as the original cables.

The most difficult part of the installation was taking all the seats and the sidewall panel out. While I did not have the starter problem common to the Warrior series due to having a geared starter on my Archer, I did notice a smaller voltage drop during cranking after installing the copper cables. I can recommend the Bogert Kit without reservation as an excellent product with speedy delivery.

I do, however, take exception to the recommendation in the December issue of the Cherokee to attach the ground cable to one of the main spar bolts. I have several objections to this idea.

To begin with you are placing a lug that is certainly not of the recommended hardness in a critical place on your airframe. Also, and of equal or greater importance, you are building a potential for corrosion or electrolytic action at a point where no one would want to take a chance on it.

I would suggest a reference to the FAA publication EA-AC-43.13 1A & 2A, Aircraft Inspection & Repair, Chapter I I, for recommendations on attaching bonding and ground lugs to the airframe.

It is quite specific about proper kind and placement of washers and bolts when mixing metal types which it does not recommend. I have had quite a bit of experience with electrolysis in the marine field and know that it is a very destructive force when you mix aluminum, copper and steel and run electric current through the union. I sure do not want this on my main spar.

For compliance with AD-86-17-01 I used an electronics International INC VA-I voltammeter with shunt kit. This unit has an STC and is an approved alternate method of complying with the AD. I found the kit very good and Ron Roberts was very helpful and modified the instrument at no cost so it would be compatible with a variation in installation I wanted to use.

I feel this is a good unit for the job and, in my opinion, better than Piper's kit, although a little more expensive. The company is Electronics International, 5289 NE Elam Young Pkwy, Suite G-200, Hillsboro, Or 97124 503-640-9797.

Master Switch Causes Voltage Fluctuation

By David Ebaugh

Our Cherokee Six had the same problem that was mentioned in the March issue--a fluctuating ammeter. But it was not caused by a had voltage regulator as everyone suspected. It was a bad master switch.

And it was very hard to find because all of the connections were tight and the grounds were good.

The problem was in the way the switch was made. The wire connects to the switch via a 6/32 brass machine screw. That was OK, but the metal tab is held to the guts of the switch with an eyelet. Right! The same kind of eyelet that is in your shoe, where the laces go through.

The eyelet was not tight. After years of use, corrosion set up between the brass tab and the base metal of the switch.

You cannot find the problem with instruments because it will not show up until there is heavy current and vibration.

Stick your hand behind the panel and wiggle the wires that go to the master switch - with everything running. You will see what I mean when you watch the ammeter. Then try to buy a new master switch. If you ever find where to get one, let me know.

Oh yes. I forgot. The metals in the switch tab, the eyelets and the switch base will not take solder. Solder just will not flow on those metals no matter how much or how good of a flux you use.

Sloshing Sealer Questions

I have heard about a tank sealer called a "sloshing sealer" for sealing gas tanks. I do not know who makes it or if it is FAA approved or if it works. Can you provide any information in this regard?

Maynard M. Hanson
Arlington, VA 22203

Older model Cherokees were notorious for developing fuel tank leaks and one common cure, once recommended by the Piper factory, was to use "sloshing compound", a sludge-like substance which supposedly sealed the tanks without having to have them rebuilt.

Unfortunately, sloshing compound was never totally efficient and, because the compound sometimes would break loose in small enough clumps to clog fuel lines, several power failures due to fuel starvation were reported.

Most of the older tanks have now been rebuilt and for anyone interested in keeping his plane, rebuilding by Skycraft is recommended rather than sloshing. Sloshing compound is still available, however. You can purchase it from, among others, Randolph Products, Carlstadt, NJ 07072 (201-438-3700).

RAM Conversion; Apollo Loran

By Bob Belinke

I have a 1974 PA-28-151. In 1982 I had the 160 conversion done at RAM conversions located in Waco, Texas. 1 have been very pleased with the performance. It added about five knots at 75 percent power.

Part of the conversation is to change a climb prop to a cruise prop. The people at RAM were just great. They encouraged me to watch the work. A team of two did the work and there were at least three inspections. They started work at 8 a.m. on a Monday and I was in the air at 2 p.m. the next day.

The only problem was I had a hard time getting revised power settings based on a cruise prop rather than the factory climb prop.

Wants "Magic Number" for Tach

We recently acquired a 1970 Cherokee 180E as our first plane and, naturally, love it! Perhaps you could help us with a few bits of ioiportant trivia. We have been trying in vain to find the "magic number" for the tachometer. The number we are referring to is the rpm setting that makes the tach recorder (hour meter) register exactly an how after and how's flight at that setting.

Also, there is no best-glide speed listed in our owner's manual and, while we are planning some empirical flight testing, we thought you might have some good ideas. The owner's manual does not always seem to match reality, especially for the recommended approach speed, which causes the Cherokee to sink like a Hershey Bar

On the other hand, o w power settings versus true air speed are exactly "by the book", although fuel consumption is somewhat higher. We have new plugs and great compression, so any thoughts as to what to look for on our upcoming annual (regarding fuel bum) would be greatly appreciated.

David and Susan Fiedler
Rescue, CA 95672

First of all, the "magic number" for your tachometer can easily be determined by some empirical testing. You will need agood time piece - I recommend a stop watch.

On a long cross country of at least an hour or two, set your power setting for cruise and leave it at the same setting. Now, mark your tachometer recorder setting as well as the tachometer indication.

After flying for at least an hour at the same setting, check your tachometer recorder setting and stop your timing. To determine the "magic number", use the following fonnula:

"Magic Number = rpm x (Recorded/Actual)

In other words, simply multiply the engine speed as shown on the tachometer by the time as shown on the tachometer hour recorder and divide by the actual elapsed time as you recorded it on the stopwatch. The resulting fig-we is the engine speed which will give you one hour of tach time for one hour of Hobbs time.

To make the calculations easier, make sure you convert both times to minutes.

The number you are looking for regarding best glide speed is 80 miles-per-hour indicated, according to my manual. If it is not exact it should be in the right ball park.

Finally, it is difficult to say a great deal about your fuel consumption. You did not say how much above book your plane is consuming, and variations exist across the hoard.

The two biggest determiners of fuel consumption are the state of engine tune and, most important, the method of leaning by the pilot. Book values are determined by engines in excellent condition and with leaning by EGT readings. You will need to lean by EGT or other reliable method in order to match book, in most cases.

Obviously, use the actual consumption values of your plane when planning cross country fuel reserves.

Crash Details

By Paul A. Gordon

I would like to relate an experience my wife and I had which may prove interesting.

Airplane crashes are what happen to someone else, "not me". We are constantly bombarded with all sorts of safety urgings from a variety of sources. I suspect that most of us, in defense, stop listening to much of it as we do with advertising.

Also, once we have made a decision to take the risks associated with flying, we do not like to keep being reminded of those risks and possibly have to reconsider the decision--or having to keep making it again and again.

I would like to describe what happened to me and my wife last November 8 in the hope that it may help someone else.

About 4 p.m. we took off from Mammoth Lakes, California, which is 7,000 feet in elevation in the high Sierras. On the ramp, as we loaded the winds had not seemed unusual or unreasonably strong. And the wind sock showed the wind down runway 27. We climbed to about 100 feet above the runway, indicating about 95 mph in my 1970 Arrow. I have no further memories for about a week. (My wife's memories stop with taxiing onto the runway.)

An experienced mountain pilot observed all that follows. He saw a sharp yaw (weather cocking) to the left as we entered a wind shear. The airplane then commenced such a sharp roll to the right that lie thought it would flip. (He said that he could see that I had responded aid was fighting the roll so that it didn't exceed 90 degrees.)

The plane then began a right turn which put it "down wind to the shear He says I did not allow it to pitch up or down, but maintained a level attitude. But the plane did what newspaper reporters think all planes do: "it fell out of the sky" with a very high sink rate.

Whether this was due to loss of airspeed or turbulence, having no lift in a vertical bank at 95 mph, or a combination, I do not know.

We impacted at well over 100 mph. The frozen gyros show a 45 degree bank and 15 degrees off-runway heading. Naturally, our injuries were quite severe and would have been fatal (experts think) had not our right wing hit a recently installed chain link fence, which absorbed some of the shock.

I have the following advice to pass on.

1. Pay a great deal of attention to what the local fliers can tell you about anything peculiar to their area, including any inferences that can he drawn from weather briefings which do not themselves contain an explicit warning.

2. If you go to Mammoth, he advised that, according to the airport manager, all of the wind-related accidents over the last few years have been in the area of the 3,000 foot runway extension (to the east of the previous threshold.)

Make a steep approach and do not even think about touching down in the first 3.000 feet. There is still 3,000 feet of overrun available at the west end of the existing 7,000 foot runway so if you land 3,000 feet long, you really have 7,000 feet in which to stop.

And do not follow the "safe" procedure of using all the runway for takeoff. I will never again start my roll from the East threshold.

There is a mountain pass south of the airport such that sometimes when there is a southerly component to the wind, a strong low altitude flow comes across that East 3,000 feet, hits an egg shaped hill north of the airport, and tumbles the air. If you skip the first 3,000 feet when taking off, you still have 7,000 feet of pavement in front of you (counting the overrun--if it is plowed free of snow.)

My wife and I still think that flying is safer for us than driving, tliough now I have a turbo, specifically for Mammoth. And now that she has (mostly) recovered from her broken back and can get into the airplane we have returned to Mammoth. So, good luck to all.

More On Open Door In Flight

By Verne Zeeman

With further reference to doors opening in flight, we have had our door pop open, or inadvertently neglected to close it tightly prior to take off, at least half a dozen times during the past 2,000 hours in our beloved Cherokee 180, "Two Romeo Juliet".

The in-flight closing procedure can be accomplished easily and safely. It merely requires straight and level slow flightjust above stall warning speed. Simply unlatch the first notch to free the door completely, grab the heavy handle firmly, open the door about six or eight inches, then pull quickly closed.

The entire procedure should not require more than three or four seconds after establishing proper speed. If you are not alone, be sure to advise your passenger to keep well clear as you do not want to damage an elbow in the process.

Regarding your comment about diverting attention from flying, I doubt that anyone holding more than a student certificate would have any difficulty with this. Personally, I have a greater diversion problem while dialing a transponder code.

Speed Mods Are Limited

By Scott Johnson

I currently own a 1973 Piper Cherokee 180, and have been contemplating putting speed fairings and flap gap seals on the airframe. 1 have consulted with some of the companies who manufacture and install these speed mods and they tell me I can expect a 15 to 27 mph increase in cruise speed.

But, I submit this is impossible as shown by the following equation:

$$\frac{2{,}700 \text{ rpm} \times 60 \text{ min/hr} \times 5\text{-feet (pitch)}}{5{,}280 \text{ feet/mile}}$$

The answer given by this equation is 153 miles per hour. Therefore, even at red-line rpm, without airframe drag, the top speed could only be 153 mph. I currently cruise at 142 mph at 75 percent cruise power (verified by DME). Even the lower claimed increase in cruise speed of 15 mph would put me well above the calculated theoretical limit of 153 mph. (142 now, plus 15 miles per hour gain= 157 mph!)

Used Dakota Had Defects

Douglass McComas, of Oceanside, California, writes a disturbing letter detailing problems with a 1979 Dakota which he purchased for $37,950.

Although the plane satisfactorily passed a flight check and a engine compression check, problems soon developed. After less than 30 hours of flying, Mr. McComas decided to perform an early annual which cost $4,984 to fix major problems which were found.

Andlessthan one yearlater, the engine, with 1,877 hours was deemed not economically repairable - a factory new engine was installed in June for an additional $23,403 outlay.

The moral of the story - know who you are buying your plane from and whether that person will stand by the plane he is selling. And do not be lulled into a false sense of security because an engine passes a compression check and everything else seems serviceable. What you see may not be what you get.

Notes From an A & P Mechanic

By Ted Stanley

I have just finished reading a recent issue of the magazine, The Cherokee and find several things which need to be clarified.

For example, you advise Paul Gordon that he should use epoxy (a very broad term) to glue his vent window latch back in place.

The correct epoxy is either number 3X or 1105 Epoxi-Patch which is available from the Hysol Division of the Dexter Corporation. Call them at (800) 538-8712 and they will sell you a small amount. The last time I ordered it came in a few days via UPS, COD.

Altematively, one could convert to the type of latch that uses hardware which goes through a .191 inch hole that must be drilled in the vent window (See the Piper Parts catalog for information.)

On page six you advise Darrell Kenworthy of various speeds for his 235.

In order to determine the correct speed one must consult the Type Certificate Data Sheets for the aircraft in question. The TCDS will list some of the airspeed limitations (Vne, Vno, Va, Vfe). For the PA-28-135, refer to page 41 of TCDS 2A13, revision 38 dated March 3, 1981. It lists five different approved flight manuals or Pilots Operating Handbooks for the PA-28-235, depending on serial number.

The TCDSs are available from any mechanic who holds an inspection authorization.

Byron Brammer complains about a leaking door. I would suggest he refer to Piper Service Spares Letters number 364 and 365 which cover Cabin Door Sealing Improvements and Cabin Door Latch Improvements. I would also suggest the rubber washer which seals the upper door latch he checked.

On page twelve you suggest to Lou Garetetti that his proposed major changes will require the submission of a fonn 337 and a "friendly A&P mechanic to approve the changes".

First of all, an FAA form 337 may only be approved by an A&P mechanic who also holds an Inspection Authorization. Secondly, the IA may NOT approve alteration; he may only "approve" the alteration in the sense that the work was done properly using previously approved data.

Finally, on page thirteen you advise readers to "Beware Carbon Monoxide Symptoms", and you mention that the heater and muffler systems should he periodically checked.

Good advice, but you should also point out that Piper recommends that the mufflers be replaced at 1,000 hours time in service. Altematively, one can have the existing muffler overhauled by one of several companies, such as Wall Colmonoy, who do this work.

Indicated Air Speed and Mods

by Jim Bradshaw

I would like to comment on the many letters which come in regarding the problem of making an aircraft go faster than the red line permits and the problems of getting the speed up too high for the airframe.

It seems no one has brought out the fact that the speeds which limit the operation of the aircraft are Indicated Airspeeds. It is important to remember that making a plane go much faster than the manufacturer did is quite a challenge. And, getting Indicated Airspeeds which approach the Yellow Caution area of the airspeed indicator usually requires some combination of low altitude, low temperatures and high power settings.

If, indeed, some of the wild claims which are made for some mods produced such high indications it would always be possible to go to higher altitude and take advantage of such performance, without violating the operating limitations of the aircraft. Getting the plane to cruise too fast, at altitude, is not a problem which one needs to be too concerned about.

Fancy Pants Evaluation

By Luis D. Santiago

I have a Cherokee 6 (260) on which Fancy Pants

were installed in June of 1985. 1 use the aircraft commercially, flying about 200 hours per year, including a lot of short, rough strips. I myself am an ATP, CFI and FE on 747's with around 10,000 hours.

Except for having to replace the original aluminum strut fairings (which cracked after about 120 hours and were exchanged free of charge), the Fancy Pants have had no problems. The new ones are far sturdier and look as though they will last much longer.

Cruise speed increased eight to ten mph on my Cherokee 6, which is at least as much as I was promised. What I did not expect was the great increase in cruise climb. I now climb out at five mph faster than before AND get about 200 fpm better rate-of-climb.

I have also noticed that much less power is needed on the descents. Whereas before I would leave cruise power when initiating a descent, I now have to pull off about five inches of manifold pressure! This has to mean the plane is using a lot less fuel.

All things considered, I believe Fancy Pants give a very worthwhile reduction in drag...almost like getting a retractable at a fraction of the cost.

History of the Cherokee - Part I

The Cherokee series of aircraft did not just happen. They were developed over a number of years. We recently ran a series written by Cherokee Designer Fred Weick. In this series we will try to cover the development of the aircraft from the beginning through the early '80s.

"Cherokee™—150, 160 & 180 series

The PA-28 Cherokee was developed at Vero Beach, Florida, in the early 1960s to replace the venerable PA-22 (Tri Pacer) series of fabric-covered aircraft.

The prototype Cherokee, N9315R, serial number 28-01, was registered in 1960 and first flew on January 14, 1960. The second prototype, N2800W, serial number 28-03, was also registered in 1960.

The first production model, N5000W, 28-1, was registered in 1961 and flew on October 2, 1961

At first three engines were offered: the 160 hp Lycoming 0-320-D2A, available in late 1961; the 150 hp Lycoming 0-320-A2A, available in late 1962, and finally the 180 hp Lycoming 0-360-A2A, available in early 1963. These aircraft were available in four trim lines with different standard equipment - Standard, Custom, Super Custom and Autoflite.

The line caught the public fancy. The first deliveries were made in 1961 and the thousandth Cherokee was delivered on January 24, 1963, less than a year and a half later!

The Cherokee "B" came along in 1963 and the "C" in 1964, with each model offering improvements to the basic design.

The Cherokee "D" of 1967 introduced the third side window to the fuselage (first developed for the Arrow series) and now only the 180 horsepower engine was offered.

Piper continued to improve the marquee, adding a new letter suffix to the plane as improvements were made - the "E" cane along in 1969, the "F" in 1971, and the "G" in 1972.

Also in 1972, Piper developed the PA-28-180 Challenger, the first 180 to utilize the five-inch cabin stretch which was also used on the Arrow II, a six percent increase in wing area and a larger, all moving tail. The first prototype N4373T, first flew in 1972 and the first production Challenger, N15020 (S/N 7305001) was registered in the same year.

For 1974 and 1975, the same basic airplane was offered with the name changed to "Archer". However, in 1975, Piper developed a new "Archer II", basically an Archer with the semi-tapered wing used in the Warrior. The Archer II used the 180 hp Lycoming 0-360-A4A engine and first production model. N4319X (S/N 28-7690002), was registered in 1975, with deliveries beginuing that same year.

The name "Cherokee" was dropped from production models in 1979 while the names Warrior, Archer, and Arrow continued.

Finally, there were several seaplane versions of the 160C and 180C produced. They were designated the PA-28S-160 and PA-28s-180. Total production through 1982 was 10,527 aircraft, as shown in the chart below.

Cherokee production (through 1982)

Serial Number From	To	Type	Year
1	670	150,160	61,62
671	1760A	150, 169, 180B	62,64
1761	4377	150, 160, 180C	64,67
4378	5499	180D	67,69
5601	5859	E	69,70
7105001	7105234	F	70,71
7205001	7205318	G	71,72
7305001	7305601	Challenger	1972
7405001	7405280	Archer	73,74
7505001	7505259	Archer II	74,75
7690001	7690467	Archer II	75,76
7790001	7790607	Archer II	76,77
7890001	7890551	Archer II	77,78
7990001	7990589	Archer II	78,79
8090001	8090372	Archer II	79,80
8190001	8190313	Archer II	80,81
8290001	8290178	Archer II	81,82

Cherokee History Part II - The **140**

The 140 was developed in 1963. Basically a PA-28-150, the 140 had only two seats and a slightly de-tuned engine designated as the 0-320-A2B. The plane was planned as Piper's answer to the Cessna 150 - a primary flight trainer.

The prototype, N6000W, S/N 28-20000, was registered in November 1963 and FAA approval was granted in

February of 1964. The first production airplane, N6001W, was registered in early 1964.

But, having made the plane more basic, Piper soon found they needed to upgrade the plane and, in the Autumn of 1965 a four-passenger version was added to the line. Improvements were made each model year.

The plane became the Cherokee B in 1969, the C in 1970, the D in 1971, the E in 1972 and the Fin 1973.

The Cherokee Flite Liner cane along in 1970. This was once again, a low-cost two-seater based on the 140 series designed to appeal to flying schools. The first Flite Liner, N140FL, S/N 28-7125111, was registered early in 1971.

The Cruiser was developed in 1971 and there were two prototypes - N1873T (28-7225022) and N5373T (28-7225318). The first Cruisers were delivered in 1972.

In 1975 Piper stopped production of the basic 140 models. but continued production of the Cruiser until 1977.

The 140 was perhaps the most popular of all Cliero-kees. Total production through 1977 was 10,089 aircraft, as shown in the chart below.

Cherokee 140* production (Through *1982)

Serial Number From	To	Type	Year
20000	24945	140	64,68
25001	26331	B	68,69
26401	26946	C	69,70
7125001	7125641	D, Fliteliner	70,71
7225001	7225602	E, Fliteliner	71,72
7325001	7325674	F, Cruiser	72,73
7435001	7425444	140. Cruiser	73.74
7525001	7525340	Cruiser	74,75
7625001	7625275	Cruiser	76,77
7725001	7725290	Cruiser	76,77

Cherokee *History, Part* III - The *Warrior*

The Warrior, the first "Cherokees" to feature the new semi-tapered wing, was introduced on October 26, 1973, and it created quite a sensation.

The new model used the longer fuselage of the Cherokee Challenger, a 150 horsepower Lycoming 0-328-E2D, and the new, longer-spa1 wings.

The wing was the biggest news. It did not have the old constant-chord design as used on previous Cherokees, but had a taper on the outer panels to improve takeoff roll. Design on the improved plane began in June 1972 with the first production plane, N55151, S/N 28-7415001 registered in 1973.

The Warrior 11, an improved model with a 100 octane 160 horsepower Lycoming 0-320-D2G, came along in 1976. The prototype, N6938J, SIN 7716001 first flew on August 27, 1976 and the first production model, N1190H, S/N 7716002, was registered in 1977 with deliveries beginning early that year.

And with the 1979 model year, the nane "Cherokee" was dropped from the model line entirely, with the new names Warrior, Archer. Dakota, and Arrow carrying the banner for production PA-28 aircraft after that date.

A total of 4,423 Warriors were produced up through 1982, as summarized in the following chart.

Warrior Production (Through 1982)

Serial Number From	To	Type	Year
7415001	7415703	151	73,74
7515001	7515449	151	74,75
7615001	7615435	151	75.76
7715001	7715314	151	76,77
7716001	7716323	161	1977
7816001	7816680	161	77,78
7916001	7916598	161	78,79
8016001	8016373	161	79,80
8116001	8116322	161	80,81
8216001	8216226	161	81,82

Sky Writing in a Cherokee

By Larry Gillett

Writing about sky writing is quite a job and one which I found 1 couldn't finish typing in one evening. But it is fun and there is money in it, so let's go.

Of course. to do skywriting requires a commercial license and, in addition, there would be quite a large expense if one didn't have an A & P license. The FAA wants to know exactly what is going on with both your flying and with the aircraft.

Actually, the FAA knows very little about sky writing which puts them at a disadvantage. But inspectors are very nervous in looking at the equipment, so approach them with a great deal of tact and slowly educate *them*, while being careful of their ego. You had better know everything about your airplane and the smoke system, because when they come out to see the finished product you can expect a lot of questions.

I have decided 1 enjoy modifying and installing the smoke *system as much* as 1 do flying, so my next venture will be to find another old Cherokee with a good engine, put a smoke system on it, and keep it for a spare or perhaps sell it to someone who wants to try his hand at smoke writing.

My airplane is a '64 140 (stock). The STC allows me to take the *smoke system* out, put in the seats and go for a Sunday flight with friends.

I suggest two radios and a transponder with altitude encoder. If you are over a major city, if the radar people can see where you are and what altitude you are at they will not bug you so much. This is precision flying and takes a great deal of concentration, so you need absolutely no interruptions when you are starting out.

Flying is pretty much at the same altitude - there

are no aerobatics, but lots of slow tight turns. At first you may get a little sick until your inner ear gets used to the new maneuvers.

While making each leg of aletter or number count while tbe smoke is on so every figure is the same size. If it is hazy or cloudy on the horizon the last letter may be hard to see. If you make a mistake, you can be sure everyone will see it. The public expects perfection and if it is not done right I have found they will sure tell you when you are on the ground.

The Cherokee is turning out to be a very good airplane for this type of flying because you can slow it down for the smoking or, if you have a smoke job to do some distance away, it will not take all day to get there. The only improvement left to make would be to install gap seals. When I have the smoke system on and am making a tight turn the stall warning light comes on a lot and, of course, kicking in some rudder puts it out. After I roll out of the turn I then regain my lost altitude.

Descending back to the airport takes almost as long as the climb to get up there because you need to keep some power on and keep the engine warm. The Lycoming engine is a winner - it is dependable and economical if you take good care of it.

To cut down on costs I use 80187 gas for take off and switch to car gas for the climb or cross country. I bad the engine quit on car gas during take off. But a good batch of car gas has more power to it than 80187 aviation fuel.

In learning this business I have made some real mistakes that turned out to be real lessons for me.

Last year I called up a national news service to ask them to take photos of me writing "IACOCCA for President" all over Portland. They thought it was a good idea so at the appointed time I started writing the message in clear blue sky

But wben I got to the last A in his name, I realized I had done the whole name upside down and backwards. I became very angry and upset with myself, but decided that since he was down there I should do it again. But in my frustration, I got too many C's in Iacocca and at this point I was so low on smoke oil the only thing to do was to go back to the field.

What May a Pilot Legally Do?

CPA members have asked asked that I publish the complete text of Part **43,** Appendix A, which covers what maintenance apilot may legally perform on his own plane. So here it is, folks:

1. Removal, installation and repair of landing gear tires.

2. Replacing elastic shock absorber cords on landing gear.

3. Servicing landing gear shock struts by adding oil, air, or both.

4. Servicing landing gear wheel bearings, such as cleaning and greasing.

5. Replacing safety wiring or cotter keys.

6. Lubrication not requiring disassembly other than removal of non-structural items such as cover plates, cowlings and fairings.

7. Making simple fabric patches not requiring rib stitching or the removal of structural parts or control surfaces.

8. Replenishing hydraulic fluid in the hydraulic reservoir.

9. Refinishing decorative coating of fuselage, wings, tail group surfaces (excluding balanced control surfaces), fairings, cowling, landing gear, cabin or cockpit interior wben removal or disassembly of any primary structure or operating system is not required.

10. Applying preservative or protective material to components where no disassembly of any primary structure or operating system is involved and where sucb coating is not prohibited or is not contrary to good practices.

11. Repairing upholstery and decorative furnishings of the cabin or cockpit interior when the repairing does not require disassembly of any primary structure or operating system or interfere with an operating system or affect primary structure of the aircraft.

12. Making small, simple repairs to fairings, nonstructural cover plates, cowlings and small patches and reinforcements not changing the contour so as to interfere with proper airflow.

13. Replacing side windows where that work does not interfere with the structure of any operating system sucb as controls, electrical equipment, etc.

14. Replacing safety belts.

15. Replacing seats or seat parts with replacement parts approved for the aircraft, not involving disassembly of any primary structure or operating system.

16. Troubleshooting and repairing broken circuits in landing light wiring circuits.

17. Replacing bulbs, reflectors and lenses of position and landing lights.

18. Replacing wheels or skis where no weight-and-balance computation is involved.

19. Replacing any cowling not requiring removal of the propeller or disconnection of flight controls.

20. Replacing or cleaning spark plugs and setting of spark plug gap clearance.

21. Replacing any hose connection except hydraulic connections.

22. Replacing fabricated fuel lines.

23. Cleaning fuel and oil strainers.

24. Replacing batteriesand checking fluid level and specific gravity.

25. Removing and installing glider wings and tail surfaces that are specifically designed for quick removal and installation and when such removal and installation can be accomplished by the pilot.

And, lest you be alarmed by the omission, a specific amendment permits pilots to replace the spin-on type of oil filter found on our Cherokees.

Dealing With Salvage Yards

By Terry Lee Rogers

Some aircraft parts - spark plugs, oil filters, wheels, brakes, tires and magnetos - are common enough and readily available just about everywhere. But some specific airframe items - cabin doors, control surfaces, cowlings, spinners, wheel pants and legs - become hard to get when the production lines are not rolling. Many owners are having problems locating these items today.

When you have such a problem. one answer may be the salvage yard.

Salvage yards exist throughout the country. Some have been in business for years.

But for some owners, the purchase of "previously-owned" parts is a last resort action. Some people have purchased used parts for years because they were mainly looking for parts which were cheaper than new parts.

Other owners were against purchasing used parts and stuck strictly with new ones. But as some parts have become scarce, sometimes a salvage pan is the only way to go.

Of course, salvage yards have been used by auto owners to supply parts to damaged automobiles. A used fender or piece of chrome trim was a lot less costly than a new one and it did the job just as well.

But many people are reluctant to use used parts on their plane, citing safety as the main culprit. But remember, all parts on your plane are used once they have been flown around the pattern once. So what is the difference?

Well, one difference is that you know the history of your plane and the parts which are on it. You might not know so much about the pans on a plane sitting in a salvage yard.

And unlike the situation involving an automobile salvage yard, many times the parts you are considering for your plane may come from a salvage yard across the country. You cannot inspect it yourself before you buy and you will be depending upon the integrity of the salvage yard in describing the part to you.

You can use just about anything on a salvage yard on your plane. There is no FAA mandate for new parts. The only requirement is that pans you use must be airworthy.

A problem is availability. Some items - propeller bulkheads on Pipers. for example. are in big demand. So they are the first items to be sold off by salvage yards. You need a bit of luck to find the item you are looking for.

Price is one benefit of salvage parts - a salvage part is generally half as costly as a new part, and sometimes even less. But prices are determined by supply and demand and, with few new aircraft being made in the past few years, the demand for salvage parts has increased and the price has cone up accordingly.

Selecting the salvage yard can he a problem, too. You want one you have heard of and which bas been in business since before last week.

Small operators are not strictly taboo, but you want someone who will back his parts if something does not fit or if some other problem develops.

Talk to the operator to find out, not only price, but his return policy, how long he has been in business, and how many planes he has in the yard (particularly planes of your type.)

He may want you to have the specific part number handy - some do not want to look up the thing-a-magig behind the propeller spinner for a 1976 Archer.

Another consideration involving used parts is your mechanic. Some do not like to use used parts, while other use them regularly. Your mechanic will have some ideas on, not only the use of parts, but on the best salvage yards to contact. Be sure you include him in any decision regarding the purchase of salvage parts.

Your mechanic may have some good ideas regarding used parts in certain applications. If a particular part on your plane developed a crack, your mechanic may he aware that just about all similar parts develop cracks after a certain number of hours. In such a case, a used part may be just about to fail and the only reasonable alternative would be a new part.

You can utilize damaged parts if your mechanic feels he can fix them to airworthy standards - you do not always have to utilize just perfect parts. (Obviously, the salvage part would need to be in better condition than the part on your plane.)

What are some of the things to consider when considering salvage parts?

1. Planes generally do not crash tail first. Parts from the engine and propeller are not as available as parts further to the tail feathers.

2. Not only can you locate airframe parts but you may be able to get good buys on accessories, such as autopilots, strobes, interiors, engines and avionics.

3. Generally, parts are sold as is. Compliance with ADs and service bulletins and determination that a part is airworthy is the responsibility of the buyer.

4. Reliable outfits honor their return policy (in case a part does not fit or is otherwise unusable), but you cannot return some items and you cannot return any item you have damaged or modified.

Salvage yards are located all over the country. Certainly you should try those in your own neighborhoods first, but do not be afraid to have a part shipped in from another section ifnecessary. Once again, it may be the only way to fly.

So if you need a part and want to try the salvage route, here is a list of salvage operators which may be able to supply your needs.

AAA **Aircraft**
9094 Skylane Drive
Wadsworth, OH 44281
(216) 336-3227

Aircraft & Engine Enterprises
Box 6070
Moore, OK 73160
(405) 794-4417

Aircraft Salvage & Rebuild
Route 1, Box 315A
Omak, WA 98841
(509) 826-4770

Aircraftsman
P O Box 628
Hillbrook, AL 36054
(205) 285-4469

Arkansas Airframe Inc.
P O Box 699
Clinton, AR 72031
(501) 745-2040

Atlanta Airmotive, Inc.
P O Box 700
Newnan, GA 30264
(404) 253-7478

Beegles Aircraft Svc.
711 Crosier Avenue
Greeley, CO 80631
(303) 353-9200

Boorom Aircraft Inc.
816 Airport Road
Jackson, MI 49202
(517) 784-2376

Central Air Parts, Inc.
Route 1, Box 456
Staunton, IL 62088
(618) 635-3252

Central Airmotive
504 Price lane
Clinton, MO 64735
(816) 885-8223

Charloe AC Salvage
Route 2
Oakwood, OH 45873
(217) 774-3968

Dodson International Parts
Route 3
Municipal Airport
Ottawa, KS 66067
(800) 255-0034

J. W. Duff Aircraft Co.
8131 E. 40th Avenue
Denver, CO 80207
(303) 399-6010

J. T. Evans Aircraft Sales
2501 S. Orange Blossom Trail
Orlando, FL 32805
(305) 843-4547

Faeth Aircraft
7501 Elder Creek Road
Sacramento, CA 95824
(916) 383-5403

Frank's Flight Service
P O Box 655
Bandon, OR 07411
(503) 347-2022

Global Aircraft Co.
5412 N. Rockwell
Oklahoma City, OK 73008
(405) 495-5230

Indiana Aircraft Salvage
(317) 873-3608 (day or night)

Kosola Associates
P O Box 3529
Albany, GA 31707
(912) 435-4119

M & K Aviation
5412 Highway 62
Jefferson, IN 47130

(McElroy Aircraft Salvage
P O Box 221
Shelbyville, IL 62565
(217) 774-3968

Midwest Aircraft &Avionics
739 N. 6th Terrace
Blue Springs, MO 64015
(816) 229-6434

Nagel Aircraft Sales
25320 Curtiss Way
Torrance, CA 90505
(213) 326-9303

National Aircraft Parts Sales
3170 Cherry Avenue
Long Beach, CA 90807
(213) 426-8309

OK Aircraft Parts
11125 Gubial Ave.
Gilroy, CA 95020
(408) 848-3377

Preferred Airparts
15105 Baumgartner Road
Kidron, OH 44636
(216) 857-7488

Quality Aircraft Salvage
12215 Mattioda Rd.
Groveland, FL 34736
(904) 429-9016

Ron's Aircraft
3788 Municipal Airport Rd.
Moses Lake, WA 98837
(509) 765-1606

SBN Aviation
4715 W. Progress Drive
South Bend, IN 36628
(219) 233-4607

Sky Tractor Service Service
R D #2
Red Creek, NY 13143
(315) 754-8843

Slagle's Aircraft Salvage
39 Robinhood Lane
Clute, TX 77531
(409) 265-8383

Surprise Valley Aviation
P O Box 279
Cedarville, CA 96014
(916) 279-2111

TN Aircraft Salvage Inc.
2313 Old Brownsville Highway
Jackson, TN 38301
(901) 424-7227

Univair Aircraft Corp.
2500 Himalaya Rd.
Aurora, CO 80011
(303) 364-7661

Waseca Mfg Co.
816 2nd Street SE
Waseca, MN 45093
(507) 835-4200

Wentworth Aircraft Inc.
1801 East Lake Street
Minneapolis, MN 55407
(612) 722-0065

White Industries
P O Box 98
Bates City, MO 64011-0098
(800) 821-7733

Solar Charger, Cold Starts

By Robert Shotwell

I have read a lot regarding copper cables to solve some of the hard-starting problems we have. Although this certainly will reduce the voltage drop in the cables, it will do little to help the battery itself.

I have tried adifferent route, asolar hattery charger. These can be purchased for approximately $50. Being a bit cheap, 1 made my own by buying a solar panel from an electronics surplus dealer (Herback & Rademan, Philadelphia) and using some spare parts I had on hand...a diode so the battery cannot discharge through the solar cell, and "zip" cord.

The commercially made models have a cigarette lighter plug. This route may work in some planes, but my Warrior's plug is turned off with the master switch. I tapped into the DC line going to the clock, and brought it out to a plug on the instrument panel that is used for the solar cell only. I unplug before starting up the engine, and then plug it in when I tie down.

I have used the solar cell all last winter and have not once needed a jump start. There is one further advantage. By keeping a charge on the battery at all times there is little likelihood that the electrolyte will freeze. This can be a very real problem during long periods of inactivity.

Certainly there will still be a higher voltage drop through the aluminum wires versus the copper, hut if the battery is fully charged and the connectors are secure, this

voltage drop should not be a problem.

Regarding cold starts, just because the prop spins fast and the engine catches quickly does not make the cold start smart. When below freezing the slow flow of cold oil, the different metal expansion rates within the cylinder, and the cylinder itself can all work together to cause a premature top end repair I feel that anytime the temperature gets below 20 degrees a preheat is cheap insurance.

A plug-in oil preheat was installed on my Wamor at the end of winter (the type which sticks to the bottom of the engine.) The two really cold days since it was put in seem to indicate that it works, if you give it the hour plus it needs to do the job. I will know more about it at the end of next winter, I am sure.

Nevertheless, I would still rather pop the ten or fifteendollars if it goes below zero to get the preheat. Given the price of a topoverhaul I would rather be safe than sorry!

Troubleshooting the Electrical System

By Joseph Bachman

My Cherokee is a 1978 Warrior which was purchased used in 1980 as a commuting vehicle to my place of work. It has been an effective and dependable means of transportation during these seven years including many hours of night and instrument flying between Sau Diego and Los Angeles. One particular problem has plagued me, however, which might be of interest to other members.

Beginning in early 1981, shortly after each take-off, the alternator load meter began to flicker, increasing in intensity and finally dropping all power off the line. By shutting off the alternator, the power was restored for a time and then the process repeated. It always checked out perfectly on the ground and seemed to be more stable under a heavy load.

For one solid year a number of mechanics studied the problem and were unable to resolve it. During that time the alternator was replaced. the overvoltage relay was replaced, and the battery, master switch, circuit breaker and numerous connectors were replaced as well.

Finally, my regular mechanic tried putting silicon putty around the alternator posts on the theory that it was arcing to the frame at the lower atmospheric pressures at altitude.

Surprisingly, this last effort seemed to pay off Other than a mild flicker occasionally and some whining in the radio it worked fairly well for nearly two years. Then the monster returned and began to steal my electrical power on dark and rainy nights.

The process began all over with alternator overhauls, replacements of alternator holding brackets, voltage regulators, battery and circuit breaker, plus installation of some filter boxes.

After two more years of frustration, inconvenience and expense, a three-day tear down of the whole system seemed to completely correct tlie difficulty. Total cost of this one problem over five years has been $3,000!

The saddest part of this is the suspicion that it was all so unnecessary. The Warrior electrical system is relatively simple and only involves a few components. Yet, three FBOs and several individual specialists were unable to satisfactorily diagnose the problem within a reasonable time. For the benefit of anyone who may have a similar situation I will offer my own opinion and one recommendation.

In retrospect I believe that the alternator was somehow mounted too close to the frame and this resulted in intermittent shorting at altitude. This in turn caused some damage to the regulator and overvoltage relay.

The replacement of any one component was subsequently damaged by othersinthe system. Certainly this does not rule out the possibility of frayed wires or inadequate grounds, etc. The alternator itself also suffered as well as caused some harm at one time because of weakened bearings, misaligned pulleys and twisted belts.

In conclusion, my single hit of advice is to treat the electrical system as a whole and not by individual components. They must all work well to work at all.

Here is a check list for electric power loss:

1. Alternator belts, bearings &brackets.
2. Wire connections from alternator to cockpit and at the battery.
3. Voltage regulator and overvoltage relay.
4. Load meter, master switch, circuit breaker.

Streamlining Improvement Comments

By Robin Thomas

On page four of the April issue you reply to a letter from John Cooley, who asked what he could realistically expect from aerodynamic modifications on a Cherokee. Could he get 20 mph or knots? he asked.

I just cannot agree with your answer and would like to help give a more precise one. Sure, 1 may well be biased, but I am seeking to tell the truth.

First of all, your statement that just doing the gap seals will add ten or twelve mph is hopelessly optimistic. Gap seals only cure a minor defect in the wing design and I challenge anyone to prove to me that they give more than six miles per hour. They do, however, give about a 50 ft./min increase in rate-of-climb.

Flap hinge fairings should give about two to three mph, and, in my experience, they do just that. It is another case where aerodynamic theory and practice agree. But to give that much, they have to fair in the hinge both fore and aft, or the itnprovement will be only half as great.

Enclosing the struts and brakes on a Cherokee will yield about another seven mph on the main gear and four mph on the nose gear for a total of 11 mph on the smaller Cherokees, but only eight on the Cherokee 6, due to the greater total drag, the improvement therefore being a lesser proportion of it.

Finally, smoothing out the leading edge in accordance with NASA procedures to ensure laminar flow will give another seven to eight mph. Some parts are necessary

to make this a viable modification, but it is mostly detail work.

The best advice to give Mr. Cooley is to find out who sells the above, and at what prices, and to choose which ones he wants. Some consideration should be given to the materials used.

So let's take the mystery out of speed mods. They do what they are supposed to do according to well established aerodynamic theory and practice.

Numerous Tips from Louisiana

By Wayne Brown

I do have a few comments on items raised in past issues.

For Robert James Jr., of Falls Church, Van Dusen Aircraft Supplies in New Orleans had wing root seal under the designation 8F65773 which appears identical to that on my PA-28-140; last year it listed for $17.50 per 10 feet (1987).

For Dal Altmin of Brookfield, WI, who asked about a white residue on his shoes after flying his PA-28-181, I read an article in another publication about an owner who had a similar problem, but his was with a white powder. The resolution involved replacing the foam-backed carpet with non-foam backed carpet. Deteriorating foam was causing the powder.

For anyone who may be experiencing in-flight fluctuating values on fuel quantities and oil temperature, I recently solved this problem by removing the instrument panel covering of my 1967 PA-28-140 and tightening the two screws on the instrument cluster, thereby providing a secure electrical ground connection.

For Charley Marcussen, of Slidell, LA. one undesirable constituent of auto gas is alcohol, and I use amethod for confirming the absence of alcohol each time I add auto gas to my Cherokee. Using a graduated cylinder from my chemistry set. I add exactly 3 milliliters of water and 7 milliliters of auto gas, then shake well for 30 seconds.

After allowing time for the droplets to separate, an increase in the meniscus height will mean the presence of a foreignadditive of an alcoholic nature (typically, an increase to 3.7 milliliters from 3 milliliters will indicate the presence of about 10 percent of an alcohol in the auto gas.)

Experience with 'Mogas'

By Tom Gray

I am one of three partners in N8442R, a 1966 140. We bave owned it for three years and enjoy it very much,

We have operated on mogas almost exclusively for the past 200 hours. We buy gas from the same station and bave had only one quirk. While one of the partners was practicing landings on a hot day, the engine faltered when given the throttle while still on the runway. We speculate that low air flow and minimal cooling while in the pattern resulted in vapor lock.

I use the following precaution to prevent vapor lock when airport hopping. Whenever I leave the plane for a short period, I open the cowling on the fuel pump side. This allows all that engine heat to escape and not overheat the fuel pump or its suction line.

Or for shorter periods, I will leave the fuel booster pump running after I have left the plane. But in no case do I attempt an engine start until the fuel pump has slowed down and sounds like it bas started pumping fuel.

Arrow Problem Causes Gear Damage

Our Problem is a possible gear droop on a 1978 Arrow III, PA-28R-201. Our problem is urgent in that two thirds of the forward end of the right nosegear door was broken from the hinge and separated from the aircraft during a flight on April 22. The remaining hinge half was twisted back to the actuator arm bracket and with the back third of the door, remained with the aircraft.

The piano hinge wire was out of the hinge back to the actuator arm area, and was not kinked or bent, and remained with the aircraft.

The only abnormal indication we bad during the flight preceding the door failure was the illumination of the unsafe gear warning light every time the airplane exceeded one or more G's. My wife and I were practicing for our biennial flight review and the unsafe gear light would come on during steep turns and when encountering rough air.

We think that the gear was partially extending and retracting during those periods which somehow allowed the piano binge wire to work its way out of two thirds of the hinge. The wire was in place during the preflight inspection.

Our mechanic thinks the cause was severe vibration initiated possibly by a loose alternator. However, we felt no abnormal vibration from the aircraft or engine prior to the damage and the alternator mounting was checked and found to be tight.

We would like your thoughts on this problem as we are installing a new nose gear door from Piper (many, many bucks). We cannot afford to have this happen again.

George and Joan F. **Stalk**
Springfield, VA 22152

Your problem is somewhat unusual. I have heard of Arrow gear drooping in flight, but have never heard of the hinge coming apart, as in your case.

First, make sure the mechanic checks that the hydraulic system is operating properly and not leaking. It should hold the gear in the up position without any droop.

Then, remember that both the landing gear and the gear doors are independently adjustable. You need to be sure that the gear is adjusted so it retracts completely and the doors adjusted so they close completely.

In addition, according to the service manual, the nose gear tension spring, mounted at the top of the nose

gear mechanism, must he replaced if the tension is less than eight pounds of pull at 4.75 inches.

With the gear properly adjusted and with the proper tension on the door, this should he a one-time experience for you.

Yoke Replacement, Old ELT Batteries

By Brian B. Bunfill

I would like to replace my worn and chipped yokes with a later style. I seem to recall someone writing about using Archer yokes. When I called Linda Lou about ordering she toldme I would have to give her the specific model in order for her to know which one to ship me. Could you give me the information to get the correct yokes.

I also have a couple of tips.

If you have a Narco ELT, when you have to replace the expired battery, do not throw the old one away. Unless the ELT was not operating it still has a lot of life left You can use this old battery as a power pack for your 12-volt scanner, VHF receiver or CB transceiver. It works very well and will last a long time so long as it is just used to receive. So far as I can tell it does not leak or cause a mess.

Also, a couple of years ago I had a crack appear on the left side of the windscreen. It was annual time to I instructed the shop doing the annual at that time to replace the damaged side and, if the right side looked like it too should be replaced, to go ahead and replace it loo. They told me that it appeared to be OK, so they left it. On the very first flight after that annual a crack appeared and then another and another until it was in need of replacement.

I do not know if the removal and then the retightening of the screws that hold the strips in place had anything to do with damaging it or not. But my advice is if both sides are the same age and one side needs replacing, it is cheaper to replace both at the same time.

As to your question about yoke, unfortunately it is not so easy to do an installation. You are going to need a field approval from the FAA before you can make the change.

Basically, you need to contact your GADO and discuss the matter with them. One experienced A&P mechanic advises do not order parts or do any of the work before you have a discussion. The FAA is less likely to approve an installation unless they have been involved with the planning from the beginning.

The best idea is to contact the FAA inspector and ask his advice. Hopefully, he will eventually think the installation was his idea and more readily approve at the end.

As an alternative to using Archer yokes you may want to consider having yours refinished. We reported last month that Americoat Corp., does refinish yokes. You may want to contact them at 3715 US Highway 98 S, Lakeland, FL 33801. Or call at (813) 667-1035.

History of the Cherokee - The 235

The Cherokee 235 was introduced in August 1963 as a further expansion of the line. The basic Cherokee design was modified with the addition of a Lycoming 0-540-B2B5 engine and increased wingspan with an additional 34 gallons of fuel in the two tip tanks.

The prototype, N8500W (S/N 28-10001), first flew in 1962, but was registered in February 1963. The first production model, N8501W (S/N 28-10001), was registered in July of 1963

The model was improved in 1965 with the introduction of the 235B. Once again, N8500W served as the prototype, with deliveries of production aircraft beginning in 1966.

In 1969 came the 235C with a third side window added. The model was called the D in 1970, E, in 1971, and F in 1972.

The 235 Cherokee Charger came in 1972, with the sane five-inch fuselage stretch which was featured in the Arrow11. Also changed with the Charger was the addition of two feet to the wing span and a new larger stabilator. The engine was now a Lycoming 0-540-B4B5.

The prototype was N2673T, was demonstrated in 1972 although it was not actually registered until 1973. The first production aircraft, N3078T (28-730001), was registered in 1972), with deliveries beginning in 1972.

This model was named the Pathfinder between 1974 and 1977. The Dakota, the PA-38-236, came along in 1977. Basically the new model was the same as the Pathfinder, however the "236" designation indicated the use of the new semi-tapered Warrior wings and increased fuel capacity.

The prototype was N38505 (S/N 28-7911001), which was registered in 1977. The first production model, N39500 (S/N 28-7911002), was delivered in 1978.

Finally, in late 1977 Piper came up with the Turbo Dakota, PA-28-201T. This plane used the Archer II fuselage, the semi-tapered wing, and a 200 hp Continental TSIO-360-FB engine.

The prototype, N38600 (S/N 28-7921001), was registered in late 1977. The first production plane, N2173K (28-7921002), was delivered early in 1979, hut production was stopped in the summer of that year with only 91 having been produced.

Total productionof all 235 and 236 aircraft through 1982 totaled 3,104 planes, as summarized in the table below.

Serial Number From	To	Type	Year
10001	10709	235	63,66
10720	11039	235B	66,68
11040	11255	235C	68,69
11301	11378	235D	69,70
7110001	7110028	235E	70,71
7210001	7210023	235F	71,72
7310001	7310176	Charger	72,73
7410001	7410110	Charger	73,74

7510001	7510135	Pathfinder	74,75
7610001	7610202	Pathfinder	75,76
7710001	7710086	Pathfinder	76,77
7910001	7911335	Pathfinder	78,79
7921001	7921091	Turbo Dakota	79,80
8011001	8011144	236	79,80
8111001	8111096	Dakota	80,81
8211001	8211045	Dakota	81,82

Temperature Probe Hard to Get

By John A. Rosso

Your readers may be interested in the problem I have experienced for a long time with my cylinder-head temperature gauge, showing erroneous readings. Initially, the gauge started fluctuating erratically and then finally settled down to a position very low on the green dial.

In the past, because of the turbocharger in my Dakota, at high altitudes it would always mn in the higher end of the green towards the red line.

I tried ordering a probe from Piper, but they were out of stock and back-ordered and the Stewart-Warner part number, SW-333B, which was taken out of the plane, was finally found in the Aviall/Van Duesen replacement book. It showed that AC part number 15123431 would be compatible as a replacement.

However, this new part was not compatible and did not make any change in the reading on the cylinder-head temperature gauge. Consequently, we finally did find a Cessnareplacement part -2372-2 which is exactly the same part as was in the plane originally and which is also defined as Stewart-Warner SW-333B.

This was put in and solved the problems I was having. However, the Cessna part cost $64. The Piper part is $34, but Piper could not supply the part as it was out of stock.

Turbo Arrow Runs Hot

I am the owner of a 1980 PA-28RT-201T and am concerned over high oil aid cylinder-head temperatures on climb out. Although I try to follow the pilot's operating handbook for power settings - 33 inches of manifold pressure, 2,450 rpm and 105 knots airspeed - 1 find that after climbing approximately 2,500 feet I have to dramatically decrease my rate-of-climb (down to 300 to 400 feet-per-miiiute) in order to avoid red-lining my cylinder head temperature.

My question to you concerns any hints or help you might give me in solving this problem. Perhaps there are other operational procedures I should follow, or perhaps engine or airframe modifications which might be available.

Walton K. Joyner
Raleigh, NC 27602

We get reports occasionally about high oil and cylinder head temperatures on turbocharged PA-28s and PA-32s. Unfortunately, this is somewhat a characteristic of this type of engine.

A turbocharged engine works harder than a normally-aspirated engine of the same displacement. That is what they put the turbocharger on the engine for in the first place.

Compression pressures are higher and incoming air enters at a higher temperature. The result is a hotter environment in the combustion chamber with more power and more waste beat to dispose of.

Operationally, the only technique I can recommend is to simply be aware of the problem and back off on climb early to keep the temperature down. When you have cleared all obstacles, drop the nose a little to get the airspeed up. Airflow over the engine is of utmost importance in a turbo.

An intercooler can help bring temperatures down, but this is an expensive modification. It will prolong the engine life, however, and perhaps give you extra peace of mind.

Floatplanes; Hand-Held Transceiver

By James E. Ellis

Enclosed is a Xerox of a PA-32 on floats from a 1969 "Invitation to Flying" published by Flying Magazine.

A few comments on Cherokees as floatplanes: although I love Cherokees, as a licensed SES pilot I think the high-wing birds do better on floats. First, if you have a helper on the dock when you come in, you want that person to catch something (like a strut) as close to the fuselage as possible.

Somebody grabbing a wingtip is likely to rotate the front of the plane right into the dock! If someone tries to get in front of a low-wing airplane's wing it will probably knock them into the water. So a high-wing airplane is better if someone is helping you dock.

If you are a macho dock-it-yourself pilot, being able to jump onto the float and walk along it is necessary. Not so easy with the wing under you rather than over you!

Anyway, those high-wingers need something to make them look balanced--like floats. Cherokees look fine as they are.

Handhelds: Aviation Consumer and the latest Flying Magazine article on the KX-99 both strongly recommend using the airplane's antenna, not the "lubber ducky" on the hand-held for reliable communication.

It is not too hard or expensive to "Y" off the com antenna input to the airplane radio and have a B&C connector mounted on the panel. Then, just keep about an 18-24 inch cable with appropriate B&C's on both ends to connect your band-held to the airplane. Otherwise, the wings or fuselage are likely to block line-of-sight radio transmissions if you try to use the hand-held as is.

We received quite a bit of information about Cherokee seaplanes. We now know that at least two planes were made. N5093W was either a 160 or 180 while N3214W was a Cherokee Six.

Piper advertised a top speed of 126 mph for the

160 and 131 for the 180 equipped with floats, with a 75 percent cruise of 117 and 122 mph, respectively.

Ratesof climb were 600 and 640 fpm with service ceilings listed at 10,000 and 11,000 feet.

Cruise range with standard tanks (36 gallons) at 55 percent power was shown as 508 miles for the 160 and 470 miles for the 180.

Despite the "superior seaplane features of the Cherokee," advertised by Piper, they did not sell.

Inexpensive Side Window Fix

By Steve Jindra

My partner and I began our spring cleaning fix ups on our 180D. The number two window behind the pilot was cracked. So we took it out in about 20 minutes.

Then we took it to our local glass and plastics dealer. We had them trace and cut another one out (same width.) The cost was $12.02 (1987) with a total time of two hours.

So you do not really need a replacement from Piper on a plain window.

Data on Wing Inspection Plates

In 1985 Piper issued a service bulletin calling for installation of inspection plates for the wings of PA-28 aircraft and for installation of a "doubler" on the main spar if corrosion was found.

I was interested in whether you had any information as to what percentage of the PA-28 aircraft that have ordered and installed the inspection ports for this service bulletin, and what percentage of those aircraft did discover the corrosion of a sufficient degree to require a repair kit.

R. C. Thompson, MD
Easton, MD 21601

As of May (1987) Piper had sold 3,101 inspection plate kits, interesting in that one kit is needed for each wing and presumably a one-wing Cherokee received the inspection plates.

Also, as of May Piper had sold 90 of the spar doubler repair kits--for 2.9 percent of the total.

Comments On Several Topics

By Dave Henderson

Concerningelectrical problems: only a few ohms resistance in the primary system can cause a very large voltage drop at the starter. All connections should be clean and shiny. Lincoln (the car) had a cranking problem in the early sixties similar to Piper. This was traced to poor primary grounding. **An** additional ground cable from battery to starter cured the problem.

It seems to me that a separate ground cable in the Pipers (along with new copper cables) would have the same result. I do not like the idea of the negative voltage path being through riveted sheet metal so I plan to install such a ground cable in 7500R soon.

I think a volt meter is also a wise investment as it usually gives a better picture of what is happening than an ammeter. "If ya don't got the volts, ya don't got the current!" Let's suppose an alternator diode is blown. The ammeter will show somewhat of a charge rate, hut the voltmeter would show reduced voltage, indicating a probable alternator malfunction. The "cruise volts" could be recorded for future reference, when tracking down aproblem. A volt meter showing zero to 20 volts is sufficient and available from electronics supply houses.

One writer mentioned alternator "whine." Better check out the alternator bushings and bearings. I had this problem in a Cessna. The armature bearing had worn to the point that the armature was rubbing on the field wiring. A complete alternator rebuild (including field wiring) cured the whine in the radios.

Prior to rebuild the ammeter did show a small rate of charge, but not enough to keep up with landing light current drain, etc. A voltmeter would have made us aware of the problem sooner. Our chronic dead battery prohlem was also cured. Lesson: alternator whine is not always a had filter.

Auxiliary radio receiver: Almost all aircraft radios have auxiliary audio inputs. My Cessna 300 radio has four and my Genave A-300 has two. If your radio has a spare input it is easy to wire in a miniature audio jack on the panel and use a shielded "jumper" cable between the jack (Radio Shack item) and a hand-held scanner radio. You can now monitor (or scan) other aircraft or business-band frequencies via the aircraft speaker with very ample amplification. For single-radio aircraft this is a neat way to monitor ATIS, other unicom channels, towers, etc.

During last winter's annual, I replaced the **carpet**ing and pressed paper hacking in my 140. My replacement, 1 believe, is very superior to the original and offers better sound deadening characteristics.

1 also removed the left bulkhead vinyl and, viola! The cardboard backing disintegrated. After cutting out new vinyl, using the old piece as a pattern (it was hard, cracked, faded and worn), I glued it to a paper-thin piece of aluminum backing bought at a local metal scrap yard. The finished part is lighter than the original and should last the life of the airplane.

Cardboard strips were glued on the back side of the aluminum at possible wear points near cables, lines, formers, etc. The rear bulkhead was redone in a similar manner with the addition of sheet Styrofoam (112-inch thick) as a stiffener.

"Turbo Normalizer" Developed

by Fernando Gomez

I am the owner of a 1980 Dakota, registration number HK2448W, whose home is Manizales, Colombia, located at 6,700 feet. Flying here in Colombia, surrounded as we are by the Andes mountains whose peaks go up to as high as

17,500 feet, I have long been interested in improving the performance of my plane.

In August, 1986, I contacted Gerald Kerkhoff of Elite-craft Specialties, Stevens Field, Pagosa Springs, Colorado (303-731-2127), about a "Turbo Normalizer" he had developed for normally-aspirated light planes.

He then proceeded to develop a system for my Dakota. While he was developing the system, I saw an article on his systems in your November 1986 issue.

In March of this year he came to Manizales to supervise the installation of the system by our local mechanic, The plane was flight tested by myself and Mr. Kerhoff and the results were incredible.

The rate-of-climb at gross is more than one thousand feet-per-minute all the way up to the cruising altitude, which is between 15,000 and 17,000 feet, getting 30 inches of manifold pressure if desired, although I prefer to use 26 inches and 2,400 rpm for cruise, climbing at 90 knots IAS.

The cruising speed for this airplane has been increased to 1601165 knots TAS at these altitudes using 75 percent power and the service ceiling is now 30,000 feet.

The plane is llow performing like a high-performance single at all altitudes, and flying around these mountains is now, l i e Mr. Kerkhoff so aptly put it, "NO SWEAT."

I highly recommend this system to all Cherokee pilots who wish improved performance without having to trade their faithful bird.

Redline Oil Temperature

My plane has 2,400 TT with 325 SMOH by Firewall Forward, of Colorado. It has high oil temperature, running at redline most of the time.

I have replaced the temperature sender bulb, tested the gauge by immersing the bulb in boiling water to confirm a 212 degree temperature, replaced the vernatherm (per service bulletin), overhauled the oil cooler, replaced the oil filter housing with a screen housing (and back again), installed new cowl baffle material, checked the timing, checked the cooling fins for obstructions and the problem persists.

The previous owner accepted the high temperature as an abnormality and just ignored the situation. I CAN'T, Many others, including an FBO, tell me to do the same.

Through your experience there must be a solution. It seems many other 180 owners have had the experience; surely someone has resolved the problem.

Thomas Dovi
Scottsdale, AZ 85257

Oil temperature problems are common and caused by many things. You seem to have covered most of the bases already, but I will try to give you a few more ideas.

Apparently, you have already replaced the thermal valve, but you should check this using the boiling water method, to be sure it is actually opening. Otherwise, oil will not properly circulate through the oil cooler.

Excessive exhaust back pressure, caused by loose or broken baffles, can result in excessive temperature, as can excessive blowby in the engine, caused by broken or stuck rings.

A few additional things to check: is the oil pump AD complete or does the engine have either the sintered metal impeller or early pump with keyed shaft? Check for blockage in the rocker box drain back tubes; make sure that the oil temperature sender line is not too close to another heat source, such as the exhaust manifold, and, finally, refer to Lycoming Service Instruction #1088 regarding sodium-filled exhaust valves requiring a close valve guide fit.

Fuel Selector Valve Glitch

David Traner, a CPA member in Corur D'Alene, Idaho, warns of a potential problem for anyone who has replaced his fuel selector valve.

Dave discovered that the replacement kit, P/N 760 546V, contained three sheet metal screws and three finish washers. The backing plate, however, has three nut plates affixedto it which are designed to accommodate three machine screws.

The replacement kit is supposed to have three machine screws and three plain washers. The problem with the sheet metal screws is they do not go in far enough and may back out. When this happens, you may discover, at an inopportune moment, that the backed out screws block the selector handle and wilt prevent you from switching tanks.

Apparently, this is not an isolated case. A check with kits in the field indicates that the wrong screws may be in many or all of the kits. If you recently have replaced yours, make sure the proper screws are installed.

Arrow Gear Bulletin Comments

I was very much disturbed upon receiving Piper Aircraft's Service Bulletin No. 866 dealing with the Automatic Gear Extension System on my PA-32R Saratoga and other similarly equipped aircraft.

I have owned my aircraft since December, 1983, have subscribed to and received a large number of aviation-related publications, and do not remember ever reading or hearing anything negative about the Automatic Gear Extension System.

On the contrary, the system has always been pointed out as an added safety feature, probably preventing the all-too-frequent gear up landings that occur in other retractables. I can only surmise that Piper must have been the subject of a product liability suit by someone who did not make it to a landing spot because his gear dropped down.

It seems a pity that the company must resort to a mandatory compliance service bulletin calling for the elimination of a desirable safety feature in order to protect itself from such legal action, if that is the case.

Fortunately, this bulletindoes not have the strength of an AD; and, for the time being, I intend to retain the automatic feature on my gear system.

Terry, if I am missing something I should know and do not, please set me straight.

Some of the readers may he interested in knowing that I replaced the two-piece windshield in my Saratoga with a one-piece unit late in 1986. It was done locally. and I am very pleased with the results and the improved visibility. The plane is usually located here at the FBO in Lynchburg, should anyone wish to examine the installation.

Incidentally, I am an old World War II Army Air Corps B-24 pilot who did not fly between 1945 and 1984, right after I bought N3566P. It has been wonderful getting hack into flying, a love and a dream I never lost.

C. L. Christian Jr.

Lynchburg, VA 24503

You are right on both counts - the Piper lawyers moved to disarm the automatic feature because of allegations concerning safety if it should activate during a forced landing scenario, and the Service Bulletin is considered "mandatory" only by Piper (and some foreign countries in which manufacturer bulletins really are mandatory for continued flying.

The only other criticism which has been made against this feature is one concerning extension in rough air at certain airspeeds. It would seem that a pilot would be able to learn to lock the system out in either turbulence or as part of his emergency procedure upon loss of an engine,

This bulletin affects all Lance, Saratoga and Arrow models, and I agree that the original system, along with some simple pilot precautions, is better than a disconnected automatic extension system.

Fixed "Gear Unsafe" Condition in Arrow

By Dale P Jewett

I was very interested in the letter from George and Joan Stalk in the July edition of the Cherokee since I am a co-owner of a 1978 Arrow III, PA-28R-201. I have flown several Arrows of the 77-78 vintage and they all have exhibited the same characteristic of "gear unsafe" red light during certain flight conditions.

Although the Stalks' gear door damage may have been secondary to the gear droop and primarily caused by displacement of the piano hinge wire, the gear droop may have aggravated the situation.

Our typical condition was normal retraction, then a red light soon after reaching cruise altitude, usually in hot weather. We expended considerable effort and expense in lubrication, re-rigging, retraction tests on jacks including gear-up tests overnight, leakage testing, several calls to Piper, changing the nose-gear-up-limit switch - all to no avail!

Finally, at my insistence, my mechanic and I installed a temporary hydraulic pressure gauge tapped into the up-pressure manifold of the hydraulic system and placed in view of the pilot. After numerous test flights in both winter and summer weather conditions, we detennined that the trapped hydraulic pressure holding the gear in the up position varied in direct proportion to the ambient temperature!

A typical flight in hot summer weather would exhibit 1,400 pounds immediately after retraction which would decrease during climb to about 850 pounds at 6,000 feet in the much cooler air. At that point the "gear unsafe" light would activate and remain on until we would cycle the gear

After cycling the gear, the pressure would again be at 1,400 pounds and remain at or near that pressure for the remainder of the flight. If we did not cycle the gears but descended into wanner air instead, the pressure would gradually increase until the light would finally extinguish.

Conversely, flights made in cold winter weather usually resulted in an increase in hydraulic pressure during climb, which was from very cold surface air to slightly warmer air at altitude. This variations were confirmed by observing the OAT changes versus hydraulic pressure changes.

I am convinced the entire problem was in the up-manifold pressure switch. According to the 1978 service manual, this switch is designed to open the pump circuit at 1,400 PSI and close the circuit at 1,100 PSI. If this indeed happened, gear sag would be prevented by an automatic short-cycle of the hydraulic pump to replace the pressure lost by temperature contraction, and most probably the pilot would never realize that it happened unless he noticed the momentary increase in amperage.

The pressure switch installed in these particular models is Consolidated Controls Corp., Bethel, CT., type 211C243-3. I am convinced that this particular switch is a misapplication and most probably never did achieve the design 300 pound differential between open and closed positions.

This opinion is borne out by the fact that the Piper Service Manual was revised on July 13, 1981 and called for a pressure switch with an operating range of 1,800 to 1,500 PSI! This newer switch has a different part number, and, of course, it costs several times more than the old switch! It seems obvious to me, however, that Piper recognized a design deficiency and changed switches in later models.

At any rate, my partner and I have resolved our problem by cycling the gear once after reaching altitude during hot weather (making sure to do it below the limiting air speed.) If we do that we experience no more gear sag problems. A permanent fix would be to install the newer pressure switch offered by Piper. This is limited to a particular higher pressure hydraulic power pack, however.

Autopilot Needs Repair

In February I purchased a 1965 Cherokee 180 which is equipped with a Piper Autocontrol II unit. The unit will not stay on course for more than 10 to 15 minutes.

I have talked with a couple of different mechanics and both have told me parts are not available, plus the unit would not be worth fixing.

Have you or anyone in the association had any experience with this? If the unit is not worth fixing I am going to have it removed.

B. W. Newsom
Altoona, IA 50009

I talked with Terry Wilburn of Lowe Aviation Instruments in Macon, Georgia (912-788-7450). They specialize in autopilots.

Terry tells me the unit in your plane is a predecessor of the Century II-B and parts are available. The problem is that the early models, such as yours, had no adjustable threshold which results is possible wing rock. Some units repair nicely, while others never do get rid of the wing rock.

It is possible to update tlie amplifier with a newer unit which will eliminate this problem. This can be accomplished with an overhaul of all the units servos. Terry estimates aprice of about $600 for such a complete overhaul.

Points to Watch on PA-32

By Henry N. Oldham

I have flown Cherokees for more than 15 years and have owned two - a 1978 181 which I sold in 1981 and a 1979 Lance II which I still have.

The Lance is a fine ship, but I want to pass on two hints to the readers:

1. There is increasing evidence, as stated in the media, of muffler and exhaust system problems with the plane. There have been instances where they failed and torched the mags. In my case the center muffler ruptured, burned holes in the shroud and air induction assembly, and mined the engine.

An 80 percent loss of power on takeoff at night at gross is no fun. Pay particular attention to the exhaust on inspections and pre-flights.

2. Watch for cracks in the engine mounts near tlie firewall attach points. They are hard to see. Gear warning light flicker is an indication.

The fonner problem is probably caused by the engine being too tightly cowled and running too hot - it runs too near redline. This certainly doesn't help engine longevity. Look in Trade-a-Plane. See any Lance that got close to TBO?

The latter problem is caused by the lack of elevator authority in the flare. It is very difficult to hold the nosewheel off, especially with two aboard up front. So, the nose comes thudding down. Look at tlie moment arm between the nosewlieel and the firewall. Then add the weight of tlie engine to the picture.

Inexpensive Gust Lock

By Joe Ryan

About a control yoke gust lock. For years I have beenusing aninexpensivembber bungee cord. I loop it from the inside of one yoke to the inside of the other as tight as necessary. This certainly retards the fore and aft movement and absolutely controls the aileron motion.

Overheated Engine Suggestion

By William Cannichael

In connection with the letter from Walton Joyner regarding heating problems in his turbo-Arrow, I would suggest the following measures to prevent overheating:

1. Use only Aeroshell SAE 50 during hot weather.
2. Install the Piper factory cooling kit consisting of new baffles and louvers.
3. Use the fuel boost pump, in low mode only, for takeoffs and climbout.

The cooling kit used to be available from West Texas Aircraft, in Lubbock, Texas. I believe the cost was around $600. It can be installed in about a days time.

With the subject mods and techniques, I took off from Albuquerque last Saturday with two passengers and luggage. Temperahue was 92 degrees, elevation 5,200 msl, without excessive heating in my Turbo Arrow.

Prior to the Arrow, I put about 2,200 hours in three different 235's that I owned. In one of them, an insidious overheating problem developed, which may be analogous to the problems enumerated by Thomas Dovi, of Scottsdale, in his 180G.

A hairline crack, between cylinders in the exhaust manifold, developed and caused sufficient turbulence so that exhaust gases in the two cylinders adjacent to the crack could not be freely discharged. This caused the cylinders to overheat.

I similarly had gone the complete trouble-shooting route before the crack was detected.

Rebuilt Carbs in Field Defective

Mike Dierker, of St. Charles, MO, reports an unusual problem, but one which may affect other Cherokee owners.

Mike experienced a problem involving the engine continuing to run after the mixture was pulled. It took quite a bit of work to find the problem.

It seems that some carburetors which were rebuilt in 1983 by B&S Rebuilders were outfitted with bad plastic floats which eventually became saturated with fuel and became too heavy. Also, some mixture control shafts were defective and would not permit the mixture to close completely. The combination lead to the run-on condition.

A number of such carburetors have been rebuilt and these carburetors may show any of the following symptoms: run on after mixture cut off, high fuel consumption; leakage around the carburetor and high fuel level in the carburetor.

If anyone is experiencing this problem remember to check the float and the mixture control shaft.

Overhaul, Intercom, Standby Vacuum

By John E. Washburn

When I purchased my 1973 140, she had about 1,750 hours on the engine. The logbook showed major overhaul at about 2,700 hours; the entry was "removed from service for major overhaul - runs fine."I made a decision to bust TBO based upon the fine reputation of the 0-320, but by how much I didn't decide.

I decided to drive the thing until either an oil analysis came back bad or compression dropped unacceptable or I became nervous about driving it. This spring, at 2,600 hours, the latter occurred; I became nervous about driving the thing.

I had already done some overhaul shopping, but early this year I had done a participation annual with Jim Carr, in Winnsboro, Texas (a very pleasant experience indeed) and had been quite impressed with his competence and concern for engine quality.

We had discussed overhaul then. I had Jim overhaul my engine to new specifications. Upon breakdown it was discovered that my nervousness was basically unfounded; Iprobably could have gotten three thousand, plus, hours out of the 0-320-E2D, but, frankly, from the logbook I could not accurately determine what kind of overhaul had been done on the engine before.

This time I know - I have seen the inside of the engine; I have yellow tags on all the big parts; everything is still tbe original size, no grinding, no chrome; valves rings, pistons, etc., are new. I believe that if I keep the plane long enough I will top the engine at about TBO and continue past three thousand hours.

On another note, I decided I wanted an intercom. I looked around and tried out other peoples' systems and decided upon the Radio Systems Technology kit intercom. primarily because it is a kit. With a kit you can more easily modify the device for your own needs.

The kit is certainly the best I have ever assembled; it worked the first time with no trouble shooting needed. It is a voice actuated system; I had used a friend's Sigtronics which is voice actuated and it was frustrating to use. It will squelch yon if you simply pause for an instant in mid-sentence.

The RST unit, however, has a two to three second delay; it will not cut you off in mid-sentence. Also, the squelch is sensitive enough that it does not chop off the first syllable of your sentences as some others do. The system has entertainment input into which I have run my AM/FM radio. The unit is quite a buy.

I occasionally find it necessary to go through clouds. Like most of us, I have read plenty of obituaries of pilots who lost their gyros in the cloud and died of an ensuing sudden stop at ground level.

Vacuum pumps are not particularly dependable, Mine has many hundreds of hours on it; it has been a very good one.

I began to consider replacing my functioning pump, but that did not seem like such a good idea because pumps like to fail at one or two hours as much as any other time. The alternative I picked was the manifold-driven standby vacuum system from Precise Flight.

I am pleased with the system. I have not used it for any real failure, yet, and chances are strong against it. The strong likelihood is that my pump will break in VFR conditions. Still, I feel a lot better upon penetration of a cloud to have the system available.

I hopefully learned a lesson during the installation of this device, however, and that is to pick my A&P well. The 'long story-short' version is that the installation cost me more than the system itself and was done so poorly that I felt compelled to straighten up a great deal of the installation myself. The high cost had to do with how long it took the mechanic to install the system. I do not know why; it took aday-and-a-half for a two-to-three-hour job, but it did and I got the hill.

Hot Solenoid Problem

Leopold Katz of Rockville Centre, New York, complained that his solenoid was getting hot during flight - he was concerned about possible fire hazards. His answer:

Your plane has two solenoids - the starter solenoid and the master solenoid. You are referring to the master solenoid which is on when the master switch is on and which disconnects electrical power when the switch is off. It acts merely as a power switch and should not reduce the voltage in the system.

Because all of the power which is usedby your plane goes through this unit, it is normal for it to become warm. It is not normal, however, for it to become so hot as to cause burns when it is touched or to cause burning odors in your plane.

If the solenoid is merely very warm, this condition is normal. If it is getting hot enough to cause a lire danger, it is not and there is either too much current going through it or there is too much resistance in the unit or in the connections to it.

Preheat Causes Engine Damage

By Robert Blackwell

On the morning of March 8, 1986, I was planning to fly to Cairo, Illinois, and return. The weather was cool enough that the engine did not fire up as it should, so I pulled 45W over to the terminal building for preheat.

I had already preflighted the aircraft so after heating I got in and fired off just fine.

I flew to Cairo and returned from the 1.8 hour flight. Upon exiting the plane I noticed oil seeping out dong the cowling. Immediately I opened it to find the cause. The preheater had been inserted into the right air intake port. The heat had damaged two of the plastic pushrod tubes on the front jug. About a quart of oil had leaked out over the en-

gine.

It was not bad enough to cause oil pressure to drop, but had this been a longer flight there very well could have been a serious problem. Don't let it happen to you.

Faired Cowl Landing Light

By George Dostal

I have a 1967 Arrow that has the landing light cavity faired into the cowling. It was done by Aronson's Air Service at Rosamond, California. It looks great and I swear that the installation reduced cabin noise level about the same amount that installation of a 114-inch windscreen did.

I understand that landing lights, Cherokee variety, have ashort life. I would estimate that my aircraft. N3708T, a leaseback, has a landing light replaced every 24 hours of light time on average, I believe it is the nature of the beast. I haven't noticed any change in bulb life since the fairing was installed. I did have some concern, initially, about heat dissipation, but it appears to have been unfounded.

starting Tips, Hoses & TCP

By Darrell D. Dake

I find my 140 to be the most stable and forgiving aircraft I have ever flown. 1 have some questions, advice, and a thank you to offer.

First, the thank you to Henry Gerson of Fairlawn, NJ (October 85 Cherokee) for his advice regarding hard starting. I prime the engine three times, hand prop it ten times (five revolutions), crack the throttle a half inch and hit the starter. The prop never turns more than a quarter turn before it catches. It is great. In the summer I prime it only one time. Because of this I am still undecided on whether to change the cables or not. If I do I suspect it will be because of corrosion others have written about.

Second, I want to advise the readers to be sure and check their oil cooler hose periodically. By periodically I mean every fourth or fifth annual. I had the misfortune of having one fail and it cost me an engine overhaul.

I had changed the oil aid filter and did a runup to check for leaks with no problem. There were no leaks whatsoever.

Then, about five minutes after takeoff, my wife thought she smelled oil. We were unfortunate, also, in that we were over a large lake and residential area at the time and by the time I reached a suitable landing site it was too late.

But thank God for the Cherokee's wide landing gear because it landed beautifully in a pasture. The broken hose was discovered only after it was removed from the fire sheathing. It was absolutely brittle. A check of the logs revealed them to be the original hoses installed in 1973

Ramon Pabalan asked about TCP in the Marc11 issue and someone asked where you could buy it and how to determine the correct amount to use. I have used TCP for about three years and found it works great. The plugs stay as clean as can be.

I purchased it through Aircraft Components, Inc., Benton Harbor, MI for $34.95 a gallon, which is enough for 1,200 gallons of 100LL. You can buy a dispenser for $14.80 which is graduated for all three grades of fuel making it a snap to draw out the right amount of TCP.

Bogert Battery Box Modification

I just thought I would drop you a line and let you know the good news. Bogert Aviation's battery box modification for all Piper aircraft which are equipped with a metal, sloped top battery box, has finally been approved by the FAA.

This modification does away with the braided p s i - tive and negative battery box cables forever. As you know the braided cables have been a constant source of irritation to Cherokee owners.

The kit is simple and straight forward. We have made things as easy as possible by providing stick-on templates for making all cuts and holes. All the hardware required is included in the kit, along with instructions, templates, drawings and, of course, the STC.

Cost for the kit, including cable assemblies, is under $70. If Bogert copper cables are already installed the kit will be under $50 (1987). That is less than half the price of what it would cost to replace your braided cables and positive to master solenoid cable with Piper parts. The kit may be ordered directly from us, or through your FBO.

Richard W. Bogert
Bogert Aviation
Route 1, Box 1676
Prosser, WA 99350

Plans Newer Seats

I am considering buying an older Arrow which will need a new interior. I would like to know whether it is possible to replace the seats with the newer, high-backed style which incorporate a headrest.

If this is possible, will this require an STC or other FAA approval? If so, how hard is it to get?

Where can the seats be obtained and at what cost?

Will any modification to the plane be required other than simply removing and replacing the seats?

Richard Perhacs
Erie, PA 16501

Later model seats will fit your plane without any modifications and the installation should be fairly simple.

You might be able to purchase seats directly from Piper, although that would be an expensive venture at best. Most individuals who have replaced their seats have located them from wrecked aircraft. A list of salvage yards to try is enclosed.

FAA approval will be required, although an STC shouldnot be necessary. A Form 337, signed by amechanic with inspection authorization, should suffice.

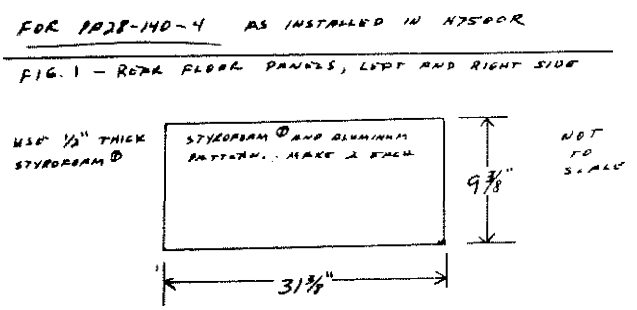

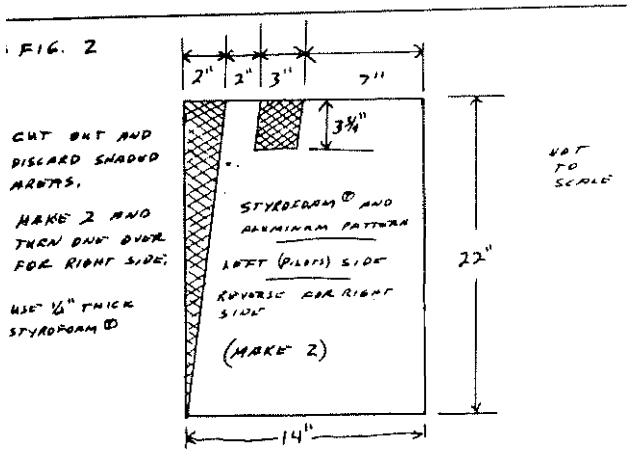

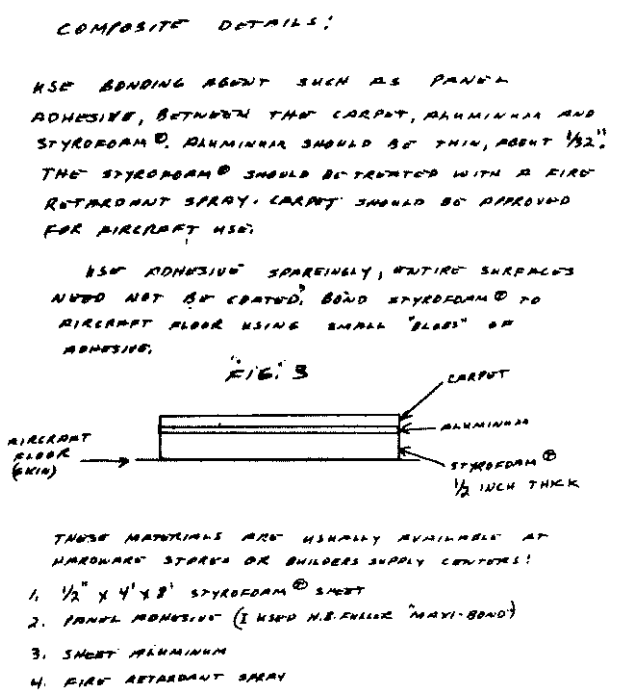

Replaced Worn Flooring

By Dave Henderson

Attached are sketches showing how I replaced the rotten, waterlogged flooring in my PA-28-140. The new flooring has the advantage of being slightly lighter in weight and offers better sound proofing than the original.

The original flooring consists of carpeting bonded to a pressed-paper material, which readily absorbed water. The pressed-paper material was then bonded to the aircraft skin with an adhesive which appears to be similar to panel adhesive. The old adhesive must be carefully scraped away. I used a wide wood chisel for this job. The skin does not have to be absolutely clean of all the old adhesive, but the major "humps" should be scraped as smooth as possible.

The Styrofoam does not have a "memory," thus the need for the aluminum. Without the aluminum, the Styrofoam will compress when stepped on, and the appearance of the new flooring will suffer greatly.

My Cherokee had the original "foot plates" on the two front sections. They were attached to the new carpeting with new bolts and huts, using the existing holes in the plates, prior to bonding to the aluminum. The protruding nuts and bolt ends are just pushed into the Styrofoam during the bonding procedure.

I recommend cutting the Styrofoam to size and fitting it into place first. After the four Styrofoam panels are trimmed to their proper size, they may be used as patterns for cutting the aluminum and new carpeting. Bond the three materials together before installing them in the aircraft Allow the adhesive to set up overnight. Install the finished panels in the aircraft using several small "blobs" of adhesive on the bottom of the Styrofoam panels. Entire surfaces need not be coated.

All four composite panels are easily made at home in one evening. New flooring is probably the one single item that will most improve the interior of the aircraft. Many aircraft owners and pilots bave seen my new flooring and all have made positive comments on it.

Air-Oil Separator

Barry Wood, of Sunnyvale, California, asked about an air-oil separator to eliminate the oil-on-the-belly problem. His answer:

Air Oil Separators are available for most Cherokee (PA-28 & 32) models from Walker Engineering, 7405 Havenhurst, Van Nuys, CA 91406. (Phone 818-782-2154.)

Bob Walker says that the units have been STC'd and require about two hours of shop time to install. The units cost $210 and do a good job of stopping the blowby which causes the unsightly belly oil.

Tip Tank Problems on 235, Wheel Pants

By Cliff Malmquist

In response to a number of questions and comments pertaining to the use of mo-gas and its effects on fiberglass tanks, Piper says do not use it as it can affect the epoxy sealing the tanks.

I purchased my 1973 PA-28-235 in the spring of 1986. I must admit that I did not do a visual inspection of the inside of the tip tanks.

Shortly thereafter. I obtained a Petersen STC for mo-gas. A couple of months later. while changing the drain cock in the right tip tank, I noticed an extensive amount of what I thought was dirt in the tank. Upon removal and cleaning, I came up with a half-cup-full of dried out, brittle epoxy, dark brown in color. It was tlie last coat of epoxy wiped over the seams inside the tank.

Particles removed varied in size from that of a pin head to several inches in length and a half inch wide. A considerable amount was also removed which had partially separated from the fiberglass but not totally broken loose.

For tlie past six years this plane was based at a fair sized field in Nebraska and serviced by the local FBO. They do not supply mo-gas and I am sure the owner never hauled it out as he is not a pilot. He just owned the plane and rented the pilot. I am also sure the deterioration of the epoxy did not take place over a span of a couple of months as a result of my use ofmo-gas. Incidentally, the left tip shows no sign of the problem.

While Piper contends this problem is the result of the use of auto gas, I feel it to be a result of gas (including 100 LL) and an improper sealing of the tank at the time of manufacture. I hate to see a good thing (mo-gas) killed while the actual fault lies elsewhere.

One brief comment prompted by a member in a recent issue. About a year or so ago I needed a nose wheel fairing for a 140 Cherokee which 1 owned. I called Wag Aero and inquired as to the quality, weight of material, etc.. on their wheel fairing.

They said the fairings were great and of the same basic unit as the factory's. I ordered them and what I received would have required several hours of fiberglass reconstruction to even come close to resembling a commercial unit. I called Wag Aero and their response was "What do vou expect for the price?"

The cost to me for a worthless piece of fiberglass was round trip shipping plus a couple of phone calls, about $40, well in excess of half of what it eventually cost to locate a used one. So if you are in need of wheel fairings and are trying to save abuck, take notice. Ain't no such thing as a real steal. Either go for factory parts or check with a salvage yard for original equipment.

Wants Wheelchair Conversion

As a member of CPA I have found that one of the values of membership is the exchange of ideas and information between the members. I hope that the information I am seeking is available from you or one of the members.

I am the proud owner of N4355B, a 1984 Cherokee Archer II, which I have leased to Marin Air Service in Noveto, California for the past three years. This arrangement has made my flying and aircraft ownership affordable.

I have been asked by a young lady renter, who is handicapped and wants to fly so desperately, to permit the installation of certain attachments to our rudder pedals which will allow her to use a demountable device to operate the pedals; the only controls she is not able to manipulate due to the loss of her legs.

A mechanic has told me that he could build such a device which has been approved and used before, but has been unsuccessful in his attempts.

I have given my consent to have the necessary attachment points installed in my aircraft for her use provided tlie FAA and our insurance company will permit it. This device must be removed from the aircraft when she is finished flying and it must not encumber the normal use of the aircraft.

I have rarely seen such enthusiasm and determination in a person wanting to fly, let alone from a handicapped person. This young lady wants very much to realize her dream of solo flying and eventually obtaining her pilot's license.

Do you or any members know of someone or some company who can install such a device in our Archer. I would very much like to hear from anyone who has successfully completed an installation. It seems to me that this young lady's call for help should he answered.

James P Rutigliano
San Francisco. CA 94107

Indeed, the Cherokee is a fine airplane for handicapped pilots to fly. Portable hand controls for the Cherokee are made by A. R. Allen, 2252 Barbara Drive, Clearwater, Florida 33546. (813) 535-1153. The price is about $250. Another source is Charles City Aeronautics, Charles City, IA 50616 (515) 228-3553.

Several hundred paraplegics have received their pilots license, and even a few determined quadriplegics are licensed. There is one organization I am aware of which specializes in promoting the needs of handicapped pilots. It is the International Wheelchair Aviators. Dues are $14 a year and run from July to July. More information can be obtained from the organization's secretary, Bill Blackwood, 1117 Rising Hill Way, Escondido, CA 92029. (619) 746-5018.

High Temp Readings, Cracked engine

By Syd Smith

I own a 1969 Arrow 200 which I bought in 1979 after owning a Cherokee 6 for 12 years. I also have more than 150 hours in the Arrow 180 as an instructor.

I have often noted high oil temperature readings that are not necessarily a result of excessive oil temperature, but may merely he an incorrect indication.

On both models of airplanes when the oil temperature indicated high, if linger pressure were applied to the clear plexiglass which covers the instrument cluster the temperature indication would show normal. I feel that the problem is a static charge buildup on the cover which dissipates when the cover comes into good contact with the instrument frame.

Recognize that the normal temperature will be in the area of 180 to 190 degrees since there is a thermostat with a setting of about 180 degrees in the oil system. The problem was cured by replacing the plexiglass cover with one which was slightly thicker. The silver paint can be duplicated on the new cover, but must be an acrylic paint to avoid crazing the panel.

The second situation I would like to note is a cracked engine case problem that I experienced. I had been experiencing anoise at low speed (TO & Climb) with high power and felt it was the nose gear doors which we rerigged, but did not correct the noise.

The noise was eventually stopped when the forward right side baffle, over the alternator, was stiffened. Although the noise, which I feel was generated by the prop blade pulsations causing the baffle to hit the alternator adjustment arm, was cured, I experienced a crack in the lower part of the case in the vicinity of the altemator support bracket attach bolt boss. I also had to have the altemator rebuilt during this time. Since the case repair and baffle stiffening, there has not been any further alternator problems, and, fortunately, no more cracked cases.

Single-Weight Engine Oil Cuts Consumption

Arnold Pritcher, of Oyster Bay, New York, passes on a tip which may save some members money and worry. His 1,200-hour Arrow was burning a quart of multi-weight oil every three hours and he thought the engine was in bad need of a rebuild.

However, after switching to straight detergent oil the consumption has been cut back to only one quart in seven hours and he is now hoping to make TBO with his engine.

Recommended Aircraft Maintenance Shops

Many Cherokee owners write in asking for a good shop to take their planes. We have kept some information over the years, but not as comprehensive as we would like.

Enter the Light Plane Maintenance shop survey for 1987. Thismagazine has come up with a group of shops around the country which have customers raving. We thought it would be nice to come up with a comprehensive list of shops known to treat Cherokee owners well.

Below is a summary of some of the information about these shops which should be of interest to Cherokee owners as distilled from Light Plane Maintenance and from other sources, including CPA member reports. This is not a comprehensive report. You may want to check the Light Plane Maintenance article for additional information on many shops around the country.

Nonetheless, here is a list of shops which have pretty good reputations. Just like anything else, however, check them out yourself before deciding. (Information was current in 1987).

Shop, Address, Phone Number	Hourly Rate	Owner Assist Annuals
Alaska Air Repair Merrill Field Anchorage, AK	$39	Yes
A&E Aircraft Repair P O Box 784 Nome Airport Nome, AK 99762 (907) 443-2116	$40	Yes
Camp Verde Airport Camp Verde, Arizona (602) 567-3371	NA	NA
Aero Mechanics, Inc. Municipal Airport Prescott, AZ 86301 (602) 445-3430	$30	Yes
Bullhead Aviation P O Box 2560 Bullhead City, AZ 86430 (602) 754-4696	$35	No
Central Arizona Aviation 5110 E. Falcon Drive Mesa, AZ 85205 (602) 832-3900	$32	Maybe
Honon Aviation, Inc. 1951 E. Airport Drive Tucson, AZ 85706 (602) 889-6327	$33	No
Flite Craft Enterprises 3000 Merrill Avenue Chino, CA 91710 (714) 597-1931	$35	Yes
J. S. Aviation Columbia, CA 95310 (209) 676-4673	$27	Yes

Air Yosimite Pine Mountain Lake Airport Groveland, CA 95321	$30	Yes
Vern Miller, Hangar 1 Reid Hillview Airport San Jose, CA 95110	$35	Yes
Dragonfly Aviation 2222 Airport Blvd. Santa Rosa, CA 95407 (707) 575-8750	$34	Yes
Benhow Aviation Maintenance 2946 Fairchild Apron Torrance Municipal Airport Torsance, CA 90505 (213) 325-3804	$35	Yes
Security Aviation 3820 W. 120th Street Hawthorne, CA 90250 (213) 676-4673	$35	Yes
Lake Aero Repair P O Box 545 Lakeport, CA 95453 (707) 263-0412	$30	Yes
Stratman Aero Service Santa Barbara Airport Santa Barbara, CA (805) 967-8096	$37	Yes
Western Aviation Maintenance 4225 W. Commonwealth Fullerton, CA 92633 (714) 670-0481	$25	Yes
Tripple S. Flying Service Glenwood Springs Airport Glenwood Springs, CO 81601 (303) 945-2764	$28	Yes
Eagle Air Repair Montrose County Airport Montrose, CO 81402 (303) 249-4004	$27	Yes
Diamond Aviation, Inc. Dover Cheswold Airpark Dover, DE (302) 674-2666	NA	NA
Aircraft Engineering, Inc. Bartow Airport Bartow, FL 33830 (813) 533-1870		Maybe
Howard Aircraft Service Craig Field Jacksonville, FL 32218	$30	Maybe
Sun Aviation Vero Beach, FL 32960 (305) 562-9257	$37	No
Finefield Aviation Lake-in-the-Hills Airport Lake-in-the-Hills, IL 60102	$30	Yes
Walters Aviation St. Louis Downtown Airport Cahokia, IL 62206 (618) 337-2810	$26	Yes
Hancock County Airport Bar Harbor, ME 04609 (207) 667-7329	$23	No
Control Aero Aviation Frederick Municipal Airport Frederick, MD 21701 (301) 694-5555	$30	Yes
Minuteman Airfield Stow, MA 01775 (617) 897-3933	$30	Yes
Avant Garde Aviation Oakland-Pontiac Airport Pontiac, MI 48054 (313) 666-3730	$33	No
Waterford Aviation Pontiac Airport Pontiac. MI 48054 (313) 666-3333	$34	Maybe
Precision Flightcraft Bootleger Trail Great Falls, MT	$28	Yes
Ron's Aircraft Service North Air Terminal 2772 N. Rancho Drive Las Vegas, NV 89103	$34	Yes
Sussex Repair P O Box 311 Sussex, NJ 07461 (201) 875-9919	$20	Yes
Air Flight Service	$30	Yes

Hangar 9 Lunken Airport Cincinnati, OH 45226		
Novak Aircraft Maintenance Portage County Airport Ravenna, OH 44266 (216) 297-0087	$24	No
Atoka Municipal Airport Atoka, OK 74525 (405) 889-3341	$26	Yes
Braden's Flying Service Easton Airport Easton, PA (215) 258-0473	NA	NA
Lancaster Aviation Lancaster Municipal Airport Lancaster, PA 17543 717-569-5341	$31	Maybe
Westchester Municipal Airport Winchester, TN 37398 (615) 967-3148	$22.50	Yes
Julie's Aircraft Service 6805 Boeing St. El Paso, TX 79925 (915) 772-2900	$32	Yes
Riteway Airmotive Addison Airport Dallas, TX (214) 239-8503	$37	No
CRG Aviation David Wayne Hooks Airport Tomball, TX 77375 (713) 376-9061	$32	Yes
Aerodyne, Inc. Hampton Roads Airport Chesapeake, VA 23321 (804) 488-2835	$30	Maybe
Orange County Aviation Orange VA 22960 (703) 672-5159	$20	Yes
Crown Aviation Paine Field Building C-13 Everett, WA 98204	$33	Maybe
Beaver Aviation Dodge County Airport Juneau, WI 53039 (414) 386-2636	$25	Yes

New Wing-Mount Landing Light Offered

For those members looking for an alternative landing light arrangement, Skycraft Corporation has received a PMA on a dual landing light arrangement which mounts a 100-watt landing light bulb in each wing.

The kit is $495 and Albert Snyder, president of the company, says it can be installed in from 10 to 15 hours. The lights mount in the wing edges and not in the wing tips. Kits are available for all straight-wing PA-28 and PA-32 models. Although the company is working on kits for the tapered-wing planes, the PMA has not yet been issued.

Incidentally, many members have been complaining about the short life of their 4509 landing light bulbs. He advises that there is little you can do about the short life. This bulb was designed by General Electric to have a bench life of 25 hours. Anything more than that is just gravy.

Copper Cables - Disabled Arrow Gear

By Michael L. Stokes

I joined the ranks of those who have installed the Bogert Aviation cables. Not only was the kit delivered rapidly, but everything fit and worked the first time! I had no problems with the old cables and the only indication I have noticed with the copper cables is a lower voltage drop when cranking.

While I had the seats out and the left side panels removed for the cable replacement, I went ahead and disabled the automatic gear system on the Arrow. Again, I had no problems with the automatic system, but decided to comply with the Service Bulletin while the airplane was apart.

The only problem with this installation is in the Piper instructions. By referring to the instructions and the schematics you have to remove the gear warning light wire from the circuit breaker. If you do as directed you will not get power to the landing gear solenoid.

The only wire which should be removed is for the lights which indicate the "AUTO EXT" is disabled or overridden.

As my Arrow is a 1968 model it did not have the disable switch installed to start with. The other area concerns the power bus bar. The instructions call for cutting of this bus bar completely in two. This is to facilitate the installation of a new 25 amp; pull/push circuit breaker. I recommend cutting anotch only for the installation of this circuit breaker--otherwise, you disable the landing light circuit and the jumper cables provided in the kit do not address enabling the landing light.

I found the Piper kit to be excellent and the directions clear, except where noted. However, $132 plus tax seemed a little high for $25 worth of parts which could have

been purchased from Radio Shack.

Wants Archer Seats in Older Model

Gerald S. Insley, of Ashland, Oregon, asked about installing Archer seats in his older-model Cherokee. His answer:

The Archer seats should fit your plane without any modifications. The biggest problem is finding a set at a salvage yard.

Some owners, however, complain that the seats are too flimsy and tend to break. Otherwise, they would work out fine in your plane.

Bulb Substitute Recommended for Beacon

A little something I discovered while trying to buy alight bulb for my Whelen rotating Beacon, Model #WRML. I receivedaquote of $15.60 - I only wanted to buy the bulb.

The Whelen bulb is a 35 watt bulb, so even though an automotive taillight bulb will fit the socket, at 15 watts it is simply not bright enough. However, I have discovered a direct replacement.

K-Mart Automotive, under their brand name, stocks a 12-volt 50 watt bulb for their inexpensive driving lights. The base is exact and it is 15 watts brighter. K-Mart #FTY 846. The best part of all, two for $2.17, and they last and last. I have not tried them in other nav lights, but I suspect they will work in that application, too.

If anyone screams it is not FAA/PMA approved, 1 refer to the above. Just trot on down to your favorite FBO and make him rich.

D. L. Schraml
Tampa, Florida

My only concern about this installation is the fact that you have installed a bulb with 15 extra watts. Can the housing dissipate the extra wattage without damage?

I agree, the price of the WRM 1940 bulb is outrageous, but I would be very concerned about possible fire due to too powerful a bulb.

Numerous Tips from Canadian Member

By **H.** W. Sanders

I thought I might contribute some of my experiences which may benefit other readers.

Oleo strut inflation: I have modified a small oxygen cylinder (approximately two inches in diameter by 14 inches long) with a 1/8 NPT tire valve and a 1/4 I.D. high pressure hose with a screw on tire inflation adaptor.

This bottle can be filled for a buck or two with approximately 1,500 psi from your local FBO's large bottle and carried on board with enough punch to fill all three oleos with pressure to spare.

Gust locks: For the first couple of weeks after getting my Cherokee Six I used the seat belt method of locking controls, but found amuch better and quicker method which consists of adjusting the seats so that the back rests can be leaned forward to contact the yokes at the center in the full elevator down position and ailerons neutral.

The yokes are thus effectively locked preventing elevator and aileron movement. In two years 1 have never experienced control movements after they had been locked in such a manner despite some heavy gusting.

Tow bars: Have you ever had the tow bar slip out of the nose wheel attachment points when pushing back or turning? An easy fix consists of bending the two C-shaped hooks into a slight S configuration. This way the bar will slip into the upper curve of the S when pulling and into the lower part of the S shape when pushing back or turning.

Engine cooling: I have taken to opening the dipstick access panel on top of the cowling immediately after shutting down thereby allowing the creation of a cooling updraft of air that dissipates residual heat from the engine which otherwise soaks into mags, pumps, 'arbs, etc., and believe me, heat can do a job on your mags. By the time the plane is unloaded, pushed back and tied down, it has usually cooled enough to close the panel.

Now that winter is on its way 1 spray silicone lubricant onto all door seals including baggage doors. This prevents doors from freezing shut and will avoid damage to door seals which have ahabit of welding doors to frames on cold days.

Here is an easy way to start your engine on a cold day by following these steps:

1. Swing the propeller five to eight blades in direction of nonnal rotation to limber up the engine.

2. Keys on dash, master on, fuel pmnp on, fuel on, mixture full rich. Prime engine for regular cold start.

3. Master off. Swing prop in direction of normal rotation five to six blades to draw fuel into the cylinders.

4. Master on, prime engine three to four strokes, fuel pump off, primer unlocked, throttle 1/4 inch. Insert key and start.

The engine should tire on the first or second blade.

Enrichen the mixture by pruning until the engine runs smoothly. Lock the primer and let engine warm up. This procedure may sound redundant to readers from the southern states, but here in Canada it gets pretty nippy and I have never failed to start my engine this way without preheat even on very cold days. Please note: take all necessary precautions when swinging the prop.

FAA Airworthiness Alerts

Model: PA-28-161
Part: Fuel Quantity Sending Unit

The pilot reported that during preflight inspection, the right fuel quantity indicator read below empty.

An inspection disclosed that the fuel tank float was missing from the sending unit. After draining the fuel tank and removing the sending unit, the missing float was found at the bottom of the tank. The float had worn at the rod attachment point to the extent the washer slipped through the opening, allowing the float to escape. The submitter suggested an inspection requirement be established to check for wear and security each 2,000 operating hours. This report has been forwarded to the responsible FAA aircraft certification office for action.

Model: PA 28-140
Part: Flap Handle

During an annual inspection, the clevis bolt (P/N 400-672), which attaches the flap handle, was found worn more than halfway through the bolt diameter. (See the following drawing). Also, the bolt hole was elongated to twice the bolt diameter.

The submitter recommends that an Airworthiness Directive (AD) be issued to address this problem. Part total time - 2974 hours.

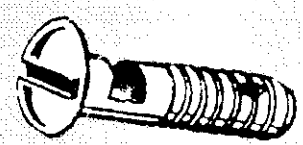

Model: PA-28-140
Part: Fuel Selector

The aircraft experienced near total loss of engine power during cruise flight after the fuel selector was positioned to the right tank. The fuel selector was then inadvertently positioned to the off position and the engine quit. The airplane sustained damage during the forced landing that followed. The certified flight instructor and student pilot sustained minor injuries.

Post-crash examination of the airplane revealed that the right wing fuel tank flexible hose which attaches to the outlet of the fuel tank was blocked by contaminants. The fuel line was manufactured in 1969 and was installed when the airplane was manufactured. It was found to be hard and brittle.

The airframe inspection checklist states that the line should be replaced when the engine is overhauled which occurred eight years earlier. A powerplant mechanic would have no need to look at the airframe inspection checklist when removing or overhauling the engine. This alert should be applicable to all Piper series aircraft which have removable fuel tanks located in the wings similar to the PA-28 series, with the flexible fuel line installed.

Piper Service Bulletin No. 571A dated October 1977 states that the flexible hose should be examined for proper position and condition, and should be replaced at every engine overhaul.

Model: PA-28-140
Part: Wing Attachment Fitting

During a scheduled inspection, the left wing steel attachment fitting, P/N 624448-02, on the aft carry-through spar, was found to be severely corroded.

The most severe damage was in an area approximately 1 by 2 inches. Between 35 and 40 percent of the material thickness had been eaten away by corrosion in this area. The submitter speculated that the cause of this damage was insulation material holding water and other contaminates in contact with the metal surface of the fitting.

The plastic-backed insulation material was actually stuck to the metal surface by the effects of corrosion. Part total time - 5019 hours.

Model: PA-28-180
Part: Wing Attachment

During an annual inspection, it was discovered that both wings had excessive lateral movement when light pressure was applied.

Further investigation revealed that both of the rear wing to fuselage attachment fitting bolts were not the proper part number. The bolts found installed were P/N AN5-9A, but the proper bolts are P/N AN5-6A.

An extra washer was also found installed, apparently in an attempt to fill the space created by installation of the longer bolts. The extra length of the improper bolts did not allow them to be correctly torqued.

It was also noted that the front wing to fuselage attachment bolt displayed excessive wear. The submitter suggested that this was caused by the excessive movement at the rear fitting.

After removal of the bolts, it was found that the wing to fuselage attachment fitting bolt holes were elongated. The submitter speculated that the long bolts caused the fitting holes to elongate, and the combination of these two defects was displayed by the lateral movement of the wings.

The aircraft maintenance records did not have any history of repairs or maintenance on these fittings or bolts.

Repair Your Own Interior Plastic

By Joe Gibbons

The refurbishment of the Warrior's interior trim is a good do-it-yourself job -- the work is not dirty, dan gerous, nor critical to safe operation. And, if you pay someone to do it, you might spend a lot of money for an interior decorator with an A & P license.

Personally, I do not enjoy working on my airplane... I enjoy flying it. But when I had the engine out for amajor overhaul, it seemed like the right time to attack the job. After having completed it, I can describe the work as straightforward with impressive results.

My plane is a 1975 Warrior II with a 160-hp conversion. I believe that the interior layout is quite similar to many model years before and after it. The original plastic panels discolor, often in blotches, from age and exposure to sunlight. The "fix" is to spray paint them.

The refurbishment task breaks down into manageable packages:

Removal
Cleaning
Repair
Painting
Replacement

Each job takes a few hours, and as you would expect for cosmetic endeavors, it is a good idea not to rush any of them.

Tools and Materials

No special tools are required for the job. You will need the following:

Phillips screwdrivers - assorted sizes such as can be bought in packages from Sears.

Assorted flat-blade screwdrivers.

Denatured alcohol for cleaning plastic panels - other solvents are OK as long as they do not attack the plastic trim.

Epoxy repair kit - for cracks in the panels. I used a marine repair kit by West. You can get by quite well using two-part epoxy glue and 3/4 inch wide glass tape.

Masking tape.

Enamel paint - buy three cans of antique white or whatever color suits you. If you want to repaint the cover for the flap handle and trim wheel, get a can @lack?) for that job.

Screws and washers - most screws are oval-head number 4, brass with nickel plating. The cosmetic washers are called cup washers (also nickel-plated brass). Both screws and all the washers are available from your local hardware store. I replaced a couple of screws and all the washers because the new ones are very cheap and the old ones were tarnished. If you like, wait until you have everything apart before deciding.

Wire markers - adhesive number tags to mark the wires to the speaker and lights in the overhead panel. Alternatively, you may use masking tape pieces and mark them with a pen.

Small containers - for storage of screws, washers, covers, etc.

Panel Removal

Care must be used in the removal of the panels since some pieces may be brittle from age and exposure to sunlight. This particularly applies to the pieces around the windshield.

When removing the pieces that fit around the sun visors, it is necessary to remove the visors (two Phillips screws and nuts). I also removed the visor supports which were rusted. Keep all the parts together.

Mark the rubber window molding (a pencil is fine) as to location. Mark the underside of corresponding panel

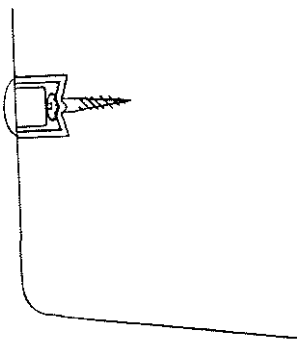

Figure 1 - Hidden Screw

where the ends of the him meet. This will keep you from going crazy when it comes time to put it all back.

Note that the panels around the side windows have screws hidden under little plastic covers. You must carefully pry the covers off and remove the screws inside. For a cross section of the arrangement, see Figure 1. By the way, I did not have to replace any of these covers, and I don't know where to find new ones if you lose or break them.

When removing the door panel, first remove the upper latch hardware (including tlie outside handle). You should reassemble these parts after the panel is removed to prevent losing them. It is also necessary to remove the cockpit side of the door restraint which is held in place with a Phillips screw.

Note that the screws for the door panel are flat head rather than oval head. Do not mix them with the other hardware.

Mark each of the interior curtain rods with masking tape labels so that you do not have a puzzle when you get ready to put them back. Upper and lower and left and right rods look a lot alike when you get them out of the plane. And keep the screws together to avoid loss or mix-up.

In removing the aft panels (in the baggage compartment) it will probably be necessary to fold down the back seat which is held in place by a screw on either side. Take care not to damage the upholstery on tlie seat back.

In removing the overhead panel (with the lights and speaker, it is best to have help available to support the assembly while marking the wires. Once the screws are removed, the panel is still connected to the cockpit roof by an assortment of wires. The wires should be carefully marked with 'adhesive wire markers (or masking tape) before disconnecting them.

Note that there is a common ground wire that circulates among various lighting fixtures and the cabin speaker before connecting to the airframe under one of the attaching screws.

Once the overhead panel is free, be careful not to damage any of the exposed hardware or to poke a finger through the speaker cone! (Don't laugh ... it's easy to do.)

The remaining panel along the cockpit ceiling centerline is the tunnel for ventilation air. I was unable to remove this entirely since a previous owner had apparently glued the plastic solidly in place around the vent control cable. I finally gave up trying to remove the panel, and I cleaned and spray painted it in the cockpit with protective newspaper covering the ceiling and the upholstery. It was not the ideal situation, but it worked.

In case you want to paint the cover for the flap handle, it is screwed into the cockpit floor and can't be easily removed. If you need to adjust tlie trim tab indicator, this is a convenient time to do so. Hopefully you left the trim tab in the neutral position before you started this project.

Once the hold down screws are removed, the flap handle must be removed to the second notch to allow clearance for removal of the cover. Then you will find a tiny little Allen screw which locks the plastic piece in place on the handle. You cannot get this off unless you are able to remove the flap handle grip. On the other hand, you probably do not need to remove it.

Notice that the trim tab indicator mechanism is now visible. If this needs adjustment, you should align it before replacing the cover.

Cleaning and Repair

Now that you have your airplane cabin all apart and it looks like an abandoned home-built project, what do you do next? Hopefully, you have found a suitable workplace where you can begin inspecting the various pieces.

As in painting a house, a car, or a fence post, the quality of the job depends upon the preparation. You should clean all the plastic and rubber parts with solvent. I used denatured alcohol which is effective and does not attack the plastic. Simply wipe the pieces with a cloth dampened with the solvent. The objective is to get a clean surface to which the paint will adhere.

At this point any cracks should be repaired. You should cut a piece of glass tape to cover the crack on the unexposed side of the plastic panel part. Then prepare a two part epoxy mixture and coat the tape in place. Make sure that the epoxy does not run out through the crack or around the edge of the panel to the exposed side (see Figure 2). Allow to harden overnight.

By the way, I also determined that the overhead air vent register controls were damaged beyond repair, and I glued them in the open position with epoxy.

Prior to painting, anything you don't want to paint needs to be masked off with tape. This includes decals, switches, the speaker grill, and air vents. Don't forget the decal on the door panel.

By the way, you may want to check the overhead panel for corroded wires or electrical fittings. Also, the nut on the instrument light rheostat may need tightening.

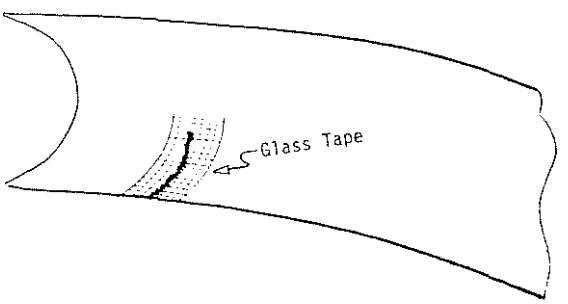

Figure 2 - Crack Repair

Painting

Finally, we get to the fun part. The paint should be sprayed on for best appearance, either with individual cans or with a spray gun. A brush application would probably he too thick and would not highlight the textured surface of the panels.

If you are not familiar with spray can operation, practice on something besides your airplane parts until you get the technique down. It is not difficult to paint these parts, hut some skill is required.

For a good application, hold the can about 12 inches away from the surface to be painted and make smooth strokes. Keep the spray going until you are past the end of the work. The nozzle should travel parallel to the surface rather than making sweeping arcs.

Unlike certain other things in life, with painting, more is not necessarily better. You will almost certainly he ahle to get by with one coat, and this should be applied cautiously to avoid runs. If you find that you have missed a spot, you may have more success spraying it once the original is completely dry. This depends on the particular type of paint, however.

A note on types of paint: I found enamel to be suitahle since it is easy to apply and durable. The original texture of the panels is a satin finish ... neither flat nor shiny.

By using a light coat of a gloss enamel, I did not hide the texture of the panels. On one piece, I experimented with asemigloss top coat over the paint, but it did not seem to make any difference in the finish.

Reassembly

Putting everything back together is fairly simple. You just reverse the procedure used to take it all apart, but do it more carefully. Unless the oldnickel-plated cup washers are very shiny, replace thenr. They are very inexpensive and add a lot to the appearance of tlie panels. I reused the screws.

Do not overtighten the screws. In fact, when reinstalling a panel, it is often wise to get all the screws started before tightening any of them. This is because the panels are flexible and tend to become distorted until they are properly secured.

When installing the door panel, first clean the window area on the door and install the rubber window trim on the panel. With the door restraint and upper latch liardware removed, fit the panel carefully. Remember to use the flat head screws for this job.

Get another pair of hands to help support the overhead panel if at all possible. Reconnect the wires and check operation on the lights and speaker.

OK you're finished. It wasn't so bad, and the new panels really spiffup the interior. And at today's labor rates, who wants to pay someone else to do it?

Now, the carpet is starting to look a little shabby...

Temperature Gauge Bad

by Thomas Dovi

In a previous letter I enumerated the many things I tried in attempting to fix a high oil temperature problem. I began by verifying the validity of the oil temperature gauge. The method I used was to immerse the bulb in boiling water to reflect an approximate 212 degree reading. I would like to inform you and other members that this "test" may not he accurate in all cases.

My engine never appeared or ran as if it were too hot. I installed an EGT/CHT gauge to determine if it actually was heating improperly; the temperatures appeared normal.

As a last resort, I had a new oil temperature gauge installed. This solved the prohlem!

The original gauge "tested correctly, but was not reflecting true values when in actual operation. Time or vibration must account for it slowly drifting to red line. This was not taken into account during my immersion test.

Please pass this information on to others. Almost everyone I have talked to with the overheating prohlem has tried the boiling water "test". Perhaps they would be pleasantly surprised in what a new gauge might do.

Starter Needed Internal Repair

by Harold bridges

I have a 1962 PA-28-150 and I have also had a hard starting prohlem that has been a plague for six years - since I hought 5583W.

I had removed the aluminum cables, checked the voltage loss from the starter stud all the way hack to the battery posts. When checked, it was within one volt.

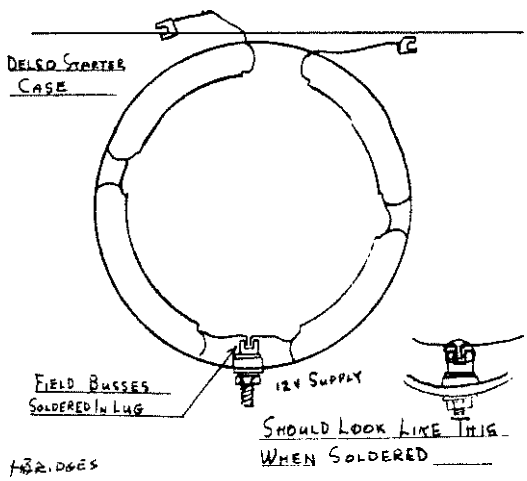

The voltage would drop to 8 - 9 volts when the starter relay was engaged. Then it would go up to 10 - 12 volts if it turned over, which was seldom. The starter always engaged with a "thud" sound, not a nice quiet engagement.

I checked for heat at all terminals and found none after prolonged cranking. The master solenoid was disas-

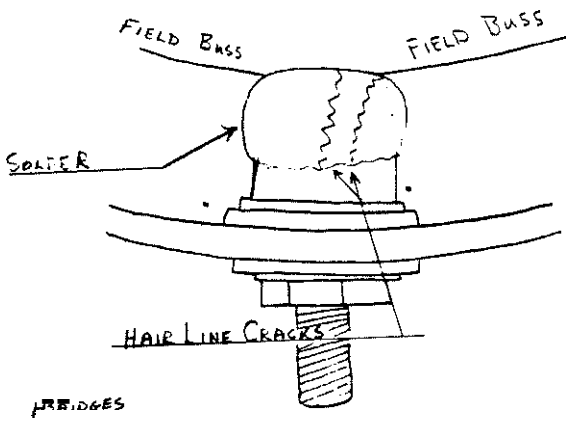

sembled and found to be in very good condition The final thing to do was pull the starter.

I have a Delco starter. When opened up everything appeared good. Bearings, front, middle, support and rear, were fine, but were all dry. While checking the supply post I noticed a hairline crack at the supply post where the field busses are soldered to it. The right two fields were the ones affected.

I took a screwdriver and gently pried up. BINGO! A clean break. I had this post re-soldered for $5 and I then began reassembling the starter. However, when slipping the end cap with the brushes onto the case, I noticed that the ends of the brush pivots were electrically burned and mechanically worn. They had been hitting the very corner of the commutator and had worn it off at a 45-degree angle.

Here was a short. Whoever Iiad this starter apart before me had failed to install the copper spacer. I put on an oil-lite washer about 3/32 inch thick and it worked fine. Someone had probably turned the whole stud when tightening the cable up. Do not let it turn.

When starting the engine now, it turns over so fast it is almost at idling speed. I would suspect a lot of Delco starters have this problem. At least it needs checking into.

Passenger Seat Gust Lock

by Donald May

Like every other Cherokee owner I was shown to tie the yoke back with the seat belt. This I never cared for and I found that by putting the passenger seat in the full-forward position and turning the yoke vertical, either left or right, the elevator and ailerons would be held securely. I alternate the deflection of the ailerons.

There is no way the pilot can enter the plane without undoing this gust lock!

Wants 0-360 in Cherokee 140

Lou LaSalle, of Belleville, New Jersey, asked about the feasibility of an engine swap of a 0-360 Lycoming in his 140. The answer:

The only practical engine swap I am aware of is the Avcon conversion which uses the 180 horsepower engine and a constant-speed propeller. The price of the kit, as of last year (1987), was $16,650.

The kit, although expensive, makes sense if you have a really nice plane and want to upgrade. Also, it helps if your engine is run out and you need to make an engine change anyway.

Avcon is located at P O Box 654, Udall, Kansas 67146 (316) 782-3317.

This kit may be cheap. To make an engine change the FAA requires many engineering tests before it will consider granting an STC, and one member once ran up around $20,000 in engineering test fees in getting his own engine swap approved

Strut Seal, Prop Balance

by Jack Thompson

Here are a couple of tips I have learned in maintaining my PA-28-161

Flat Struts: Now that cold weather is here there are going to be a lot of flat struts, which your friendly mechanic will tell you should be rebuilt. Do not rebuild them.

First, get some Granville Strut Seal, sold through San Val, Aircraft Spruce, Central Aircraft Supply or some other source. The stuff works, and works by softening and expanding the seals. And if it doesn't, Mr. Granville will refund your money.

I had a bad main and nose strut which I was told needed to be rebuilt. I put in the strut seal (FAA approved) eight months ago, aired them up, and they have been up ever since.

Radio **Filter:** On a recent alternator change I was charged $67.50 for a capacitor, installed to eliminate radio interference. The same or comparable capacitor can be obtained from Radio Shack ($4.95). Also, any other computer grade (threaded ends) may be used if similarly rated.

Prop Overhaul: One of the best things I have done lately is have my prop overhauled, rebalanced, reshaped and analyzed. The total was $140. The engine runs smoother and with lots less vibration. You can remove the spinner and hack plate and prop yourself. Be sure to identify each bolt to its hole and index mark your spinner and hack plate to your prop. Do not use a graphite pencil and do not forget that your mark on your propeller will not be there when it comes back.

Reinstall the prop exactly as it comes off and have your mechanic re-torque your bolts and safety wire and sign your log books. Away you go. And your engine will appreciate it.

We are all interested in lower-cost sources of parts and accessories for our aircraft. One publication I have found very valuable is the Trade-a-Plane newspaper. Parts discounters and avionics suppliers advertise extensively in the publication.

Through one of these suppliers I purchased a portable nav/comm handheld unit, mine being the ICOM IA-20. Others are made by King, STS and Narco and priced between $375 to $475. What wonders of technology these things are, especially when you consider a new panel mount nav-comm usually doesn't have the number of features of the handheld and sell at four to five times the price, plus installation cost.

However, for maximum range, the handheld should connect to an external antenna. This is easily accomplished with a panel-mounted connector to which a short length of coax is installed (temporarily) between the handheld and the connector. These units should he seriously considered, especially if you have older avionics.

Arrow Propeller is Scrapped

Speaking of propellers, I received a phone call today from a member who has some real problems in his Arrow. As many members know, Arrows are subjected to a repetitive AD which requires the propeller to he inspected regularly.

This member took his plane in for his inspection and learned that he must replace both blades - at $1,600 each. The reason is twofold. First, over the years his blade has been dressed out to take care of nicks and chips and, cumulatively, the dressing has removed enough metal so that the blade no longer has the minimum blade width to pass inspection.

Also, apparently a former owner removed two inches from the blade tips making an illegal change. That, too, is not repairable and requires the blades to be scrapped.

Arrow owners may want to check their propellers to be sure they are actually legal, and be certain no modifications are made which may cause the blades to be declared scrap at a future inspection.

Bungee Lock, Controls Tight

by Raymond Gibbs

It appears that some of the Cherokee owners are having problems with the yoke locking by using the seat belts. I didn't like it for two reasons. First the belts are too short. Second, I installed a gap kit which caused the plane to want to go in circles after being strapped for a week.

My answer was to use a plastic end bungee cord with ends that can be moved up and down to make it as long as desired. By putting the ends at 90 degrees to each other they can be hooked together tying each yoke to each other with the pressure desired by the aircraft owner. I got mine from an auto parts house for under $5.00.

This will also let you keep the ailerons flat, and the yoke set for tail up, down or flat as desired.

This should take care of the problem with the aileron bellcrank if that was caused by using seat belts on the yoke. However in this case it might pay to check the cables to see if they are properly adjusted.

I found the yoke harder to turn right or left on my PA-28-151 one hot day this past summer. Only I fly the plane so I knew it was not normal on my plane. I found that on the last inspection the control cables were adjusted without taking the cold temperature into account when the adjustment was made. The hull expands faster than steel cables making it tighter on the hot day than on a cold one.

I was told by the mechanic that this will damage the controls to the point of breaking. So if you meet more resistance on the yoke on the hot day do yourself a favor and check those cables.

Battery Cables & Strut Plug

by Bert Forero

Another money saving idea. Recently I bought battery cables to replace the old ones, as everybody seems to be doing.

Again, the time consuming work is removing the seats, and opening the side panel. I did this, and made an appointment with the mechanic, and he completed the job in 2-112 hours. If you do not remove the seats andpanels, it will be at least another 1-112 hours. Regardless of where one buys the cables, one still has to pay for the installation.

My mechanic did agreatjob; the engine starts much faster now. It is going to be a great difference in the winter.

Finally, I had lost the plug that covers the struts on the wing. I found that one of the hardware stores, here in Baltimore, has a metal one which fits perfectly. The cost was $1.15.

Changing Your Oil and Filter

by Terry Lee Rogers

Of all the preventive maintenance operations which may be performed by pilots, perhaps none can save as much money or provide as much education as the periodic oil and filter change.

By performing this service yourself, not only do you save from $30 to $50 in shop labor, but you will give yourself a good idea of how your engine lubrication system is working and you will insure that the job is done right.

Engine oil is ahard-working lubricant which keeps your engine from tearing itself apart. But, like any other component on your plane, it will wear out with use, and it needs to be replaced regularly.

Cleaning additives tend to be used up, antioxidants become oxidized, and the oil moleculesthemselves are tramformed by exposure to pressure and heat into less viscous molecules which can no longer cut the mustard when it comes to the job of lubrication.

How often should you change your oil? The answer varies depending on how you use your plane. If you fly infrequently and yourplane sits for long periods without flying, change often, perhaps every 25 hours or every six months, whichever comes first. You may need to change your oil even if the engine has not been run at all. After a

period of several months, the antioxidants will become oxidized just from standing.

Likewise, change oil frequently if you fly in dusty conditions or have other reasons to suspect your engine is contaminated by dirt or sand.

Lycoming and Piper recommend oil changes, for normal use, at 50-hour intervals, with changes up to 100 hours apart where a full-flow oil filter is used and the filter itself is changed at 50 hour intervals.

Up until a few years ago, you would automatically have chosen a single-weight ashless dispersant oil for your engine. You would have, of course, chosen an oil with a weight appropriate to the season - heavy weight for winter flying, and a lighter weight oil for summer flying.

But several years ago multi-viscosity oils came on the market and are highly popular today. Some synthetic oils, such as Bel Ray, are very expensive, while some oils, such as Phillips XC (not to be confused with the discontinued XC-II) and Shell 15W50 multigrade are available at little more than a straight-weight oil.

Multi-weight oils are still controversial. Some owners swear that their engines consume far less oil with single-weight brands; others swear by multi-viscosity oil,

Many of the well-known overhaulers andrebuilders do not recommend the multi-viscosity oils. Van Dusen, for example, suggests that because multi-viscosity oils are thinner at lower temperatures they will tend to run off engine parts quicker and, thereby, lead to internal part corrosion,

At any rate, what brand of oil, and whether to use multi-viscosity oils, are decisions you will need to make. And once made, stick to your decision. You may eventually want to change from straight oil to multi-viscosity oil or back, but do not keep changing back and forth. Once you have a brand you like stick with it and try not to mix types, as various additives may not be totally compatible.

Straight mineral oil, although often recommended for break in, is not suitable for long-term use. It does not have the cleaning and antioxidant additives needed in modem aircraft engines.

And, of course, automotive oils should never be substituted for aviation oil. These oils contain special additives which will result in preignition when used in aircraft engines.

Let's now talk about actually changing your oil. Of course, the first item on the agenda is to drain the old oil from the engine. But cold oil does not flow readily so you are going to want to wann it up. A trip or two around the pattern should be sufficient for this purpose. You do not need along cross conntry trip. You want warm oil, not hot.

Locate the oil drain plug on your engine. Unfortunately, to get to it you are going to have to remove the engine cowl in most cases. You will need a four-gallon bucket to drain the oil into and you will need hose and funnel to catch the oil and convey it to your bucket.

Now, either remove the drain plug with a wrench or, if your plane is equipped with a quick drain, open the drain valve. It will take about 10 minutes for your engine oil to drain completely. Remember, you are draining not only the oil from the engine, but the oil from the oil cooler, too.

After the oil is drained, replace the drain plug and safety wire it in an approved manner. Or, if you have aquick drain, simply snap the valve shut.

Obviously, a quick drain valve has a lot to recommend it when it comes time to change oil. But if you plan on putting one on your plane, and you fly an Arrow, Lance or Saratoga retractable, make sure you use the proper part number. Some quick drains will not fit properly in these planes and will cause interference with the landing gear. In this case, gear retraction may well mean an inadvertent oil drain, as well, which is not what you want right after takeoff.

Before adding new oil, however, make sure you change your filter and the oil screens.

Most planes now have spin-on oil filters, just like on your car. Some, however, have the older type which mounts a filter inside a separate can, and some engines have no filter at all, but merely oil screens.

Changing the spin-on filter is a snap. First, be sure you have the correct part number. Check with the manual on your plane - do not just put on the same type which came off If the wrong filter is in use on your plane now, you do not want to perpetuate this error by copying it when you change the filter.

With correct filter in hand, undo the safety wiring on the old filter. Make sure you take note of how the filter is safety-wired. You want to insure that the new filter is correctly safety wired to the correct spot on the engine. Your filter will probably be the type which is removed by applying a one-inch wrench to the hex nut attached to the end of the can.

Be aware that you will probably spill about half a quart of oil while undoing the filter, so have a can underneath to try to catch this spill.

Do not simply throw this filter away. You will want to check the pleats of the filter to see whether any metal is present. You can generally get a can opener at an auto parts store for a few dollars and this will help immensely.

Even if you are having an oil analysis done, the metal shavings which show up in an oil filter may not show up in the oil analysis, so it is important to check. And if you find something out of line, it is time to have a mechanic check further to insure that something is not amiss.

Installation of the new filter is straightforward. You should pre-lubricate the oil filter gasket, but the correct lubricant is not engine oil. Although it is common practice to smear engine oil on the gasket, engine oil will break down at high temperatures and form a sort of glue. It will make it harder to get the filter off next time, not easier. The correct lubricant to use is Dow Corning DC-4.

Start the filter by hand and, when the gasket seats, torque the filter to 18 foot-pounds, or any other figure specified by the manufacturer of the filter. Do not overtighten. Otherwise, at the next oil change you are going to think the filter is welded to the engine. Also, you can damage the can and cause leaks.

Finally, using approved methods, safety wire the can to the engine.

If your plane had the older style separate-element filter, the job of changing it will be a mite more messy. Once again, remove all safety wire, noting how it was installed. Undo the stud holding the unit together while using a can to catch the oil spill.

Remove the entire unit aid begin disassembly of the can. You will need to throw away the various gaskets and replace them with new ones as you proceed. And be sure to use approved gaskets - similar automotive gaskets must not be used.

Remove the old element and replace with a new one and begin reassembly of the entire unit. Once assembled, reinstall it by reversing the steps used to remove it. The various gaskets should be pre-lubricated and this time the correct lubricant is clean engine oil. Dow Corning DC-4 is not recommended. Be sure to torque tlie bolt as specified on the side of the can or in the service manual (recommended torque is 15 to 18 foot-pounds.)

Finally, you need to safety wire the unit just as is done with a spin-on oil filter.

Servicing this type of oil filter is a lot more messy than the spin-on type. In addition, due to the number of gaskets and openings in the container, this type of unit is prone to leak. It is imperative that after replacing tlie filter the unit be checked for leaks after tlie engine has had a chance to warm up to operating temperature.

Also, just like with the spin-on type filter, do not discard the element until you have had a chance to pick through the pleats and inspected for any excess metal sliavings or pieces.

Now that you have drained the oil and replaced the filter you are still not ready to add fresh oil to the engine. Your engine still has two oil screens which need to be checked.

The oil suction screen is located either on the bottom aft end of the engine sump, installed horizontally, or located forward of the carburetor. installed vertically. To remove both types, cut the safety wire and remove the hex head plug. The screen should he cleaned to remove any accumulation of sludge and to examine for metal filings or chips. Obviously, anything unusual found here warrants referral to your mechanic for follow up.

After cleaning arid inspection, place the screen inside the recess in tlie hex head plug to eliminate possible damage to the screen. Insert the screen into the housing and when it is properly seated, tighten and properly safety the plug.

The second screen, tlie pressure screen, is located in a housing on the accessory case of the engine, between tlie magnetos. It needs to be cleaned and checked for engine filings or chips and, if anything unusual is found, bring in your mechanic for further diagnosis.

Piper recommends a new gasket be installed when reinstalling the screen. Ascertain that the screen fits flush with the base surface of tlie screen housing. Position the housing on the mounting pad and install the attachment bolts. Torque these bolts between 50 and 70 inch-pounds.

Now you are ready to add oil. Check with your service manual to see how much oil you need. Most PA-28 models require eight quarts, except for the 235 and 236, which require twelve.

After filling the crankcase with oil it is time to test run tlie engine. Start her up and wait no longer than 30 seconds for oil pressure to register. If you have no oil pressure, shut the engine down and find out why. Otherwise, run the engine for at least five minutes, shut it down, and then make a final check for leaks.

And, like the old proverb says, the job is not finished till the paperwork is done. Make logbook entries showing what was done and that you have returned the plane to service. And the job of changing oil is finally through.

If you do not have a spin-on oil filter perhaps you want to consider having one installed before your next oil change. Lycoming markets an adaptor, part number 77852 for both the 0-360 and 0-320 engines. The list price on this is approximately $120, but it may be purchased at a lower price from many of the discount houses.

Similar adapters are available for Continental engines, too.

Also, Wag Aero markets an adaptor for the Lycoming engines for under $60, and that price includes the filter! Wag Aero's catalog number is 800-558-6868. The company is at Box 181, 1216 North Road, Lyons, WI 53148.

At any rate, before beginning a conversion check out Lycoming Service Instruction Number 1319A which describes the procedure for installing the adaptor and the materials required.

Finally, it seems appropriate to end this discussion of oil and filter changes with a few words about oil analysis. This, too, is a tool which many plane owners swear by. It can be invaluable in helping provide early diagnosis of potential engine problems.

With oil analysis, you send a small sample of your engine oil at prescribed intervals, generally at the time of oil changes, to a lab which then analyzes your oil for metal aiid other contaminants.

The lab utilizes a device known as an emission spectrometer to detennine the percentages of certain materials in the oil. What you will he looking for is iron, which may give an indication of cylinder wall wear; chromium, which tells about piston ring wear, or cylinder wear in engines with chrome cylinders; copper, which gives an idea of valve-guide and bearing wear; aluminum, which indicates piston wear; and silicon, which shows how much sand and grit is getting inside your engine.

Actually, a one-time analysis of your engine oil is relatively worthless. The numbers, unless they are really out of this world in any particular category, are useful only in establishing a trend. Several analyses are needed to establish such a trend of wear in an engine.

But, when several analyses have been done, an increase in percentage of an element may then show rapid

wear during the last testing period. An increase in copper, for example, means bearings or valve guides have suddenly begun to wear more than usual - a sign of impending trouble here.

Although several laboratories specialize in oil analysis, the results vary widely. An oil sample sent to one laboratory may show widely differing percentages of tlie same sample sent to another.

On the assumption that although different labs may give different results, but that each lab will be consistent, the idea is to pick out one lab and stick with it so that any changes in numbers will have sonic significance in determining wearpattems. If you send your samples to different laboratories, the results may be meaningless and no trend may ever be established.

The lubricationsysteni is literally the heart of your engine. It requires very little care, but it deserves more than it sometimes gets. Take care of your oil and it will surely take care of you.

Glare Shield Comments

Bill Stiles, of New Castle. Pennsylvania. wrote in with both a compliment and complaint about the glare shields manufactured by Dennis Ashby.

The compliment: they look nice when installed. The problem: it takes about 25 hours of "fiddling around."

The glare shields cost about $100, but Bill is expecting a shop bill of several times that amount for the labor involved in the installation.

We have run articles in the past about glare shield replacement. The problem stems from the lack of space in which to work. Either you remove the windshields or be prepared for hours of work as a contortionist.

Particular patience is needed when working on the defroster ducts. These are held in place with screws and self locking nutsunder the panel. It is atwo person job and a tedious one at that.

Bill says that if you can put up with the "hassle factor, you will solve forever the problem of rotting cloth." Nonetheless, he says he would not have done the job if he had known how much it was going to cost.

A suggestion - for anyone contemplating this change, enlist the aid of a very good friend and do the job yourself rather than paying a mechanic to make this installation. And be prepared to reward your friend nicely for his help.

Inexpensive Beacon Revisited

I was pleased to read in a recent edition of the magazine about an inexpensive substitute rotary beacon light bulb discovered by Mr. D.L. Schraml of Tampa, Florida. Good work. It's long over due.

Since I just had another one expire I went shopping this morning. I still don't have one, but I do know a lot more about this particular lamp. Specifications on the WRM 1940 are as follows:

GE 1940 (aka WRM 1940) Aircraft Marker; 14 Volts; 3.75 Amps; 50 Watts; Rated at 300 Hours; approximately $20.00 retail ($10.00 wholesale).

The part number Mr. Schraml indicated is a packaging number. There were a dozen different FTY #846 lamp packages. I was unable to locate any that even came close to the intensity needed. (I say "packages" because all K-Mart small lamps are sold in "two packs".

I wish Mr. Schraml would take another look at his purchase and see if he can determine what he really has. (Look for a six digit number next to the FTY # 846, such as "82-10-77" or in the upper left hand comer such as "No. 1141".)

For $2.17 per pack it is well worth pursuing.

(Ed. Note: I contacted David **Schramel** who responded as follows).

Dear Terry,

Enclosed is the package for the bulbs. Number 82-29-06 is the K-Mart stock number. The bulb bas only one marking -12V50W with no automotive number, such as 1041, etc.

Several people I have told about it have tried them. A good friend found them in K-Mart in Vero Beach, and for $1.77 yet!

I was concerned about the heat, as you mentioned. But the same size wire is used on the 100 watt landing light as tlie beacon, so I rationalized the wire is not a problem. I did run a test though. I ran the beacon about 15 minutes on the ground with the engine off. I then felt the Lexan dome and the beacon base. I did not detect any more heat than usual.

Hartzell Prop Worn Down

Dear Terry,

I am still reeling from being told my prop blades failed their five year inspection. The list on Hartzell 7666A blades is $1,600.00 each! Many phones calls later, I found no secondhand blades available.

After some persistence I found a shop to give me a substantial discount and trade on the old (undamaged) blades. Apparently he cuts them down to size for experimental class birds. He asked not to be named in print. Sorry. Advise to find EAA types for guidance.

Caution Cherokee shoppers about aging blades with a history of 20 or so annuals and the attendant leading edge grinding.

Paul Novak
Lexington, KY 40504

Readers will recall that Paul first learned he had a problem when he took his propeller in for a routine inspection according to the Hartzell AD. He was told that the blades

had been "dressed to the point that they were no longer wide enough to pass inspection. Also, someone had cut down the blades, removing two inches from the tips.

This should be a rare type of problem, but one which will have expensive consequences if you encounter it.

Spinner Nutplate Cracks Dangerous

by Scott Gordon

Here is a service bulletin item for all Wamor owners. I recently found cracks around the nut plates of the front propeller spinner bulkhead on my aircraft. Upon close examination, I found cracks not only around the nut plates but also outboard of each bulkhead propeller bolt hole.

Researching the aircraft records showed this bulkhead had been replaced at about every three year or at 400-hour interval.

For those readers who feel they can continue using this part and delay the $125.04 cost of a new one I have only one thing to say: don't. When 1 bought my PA-28-161, I discovered a cracked rear propeller spinner bulkhead during the first aunual. The aircraft records showed it had been discovered on a previous inspection and deemed airworthy to be replaced at a later date. I sent my propeller in for an inspection and a 30 thousandths deep scratch was found in the propeller where the bulkhead rested on the propeller.

The propeller was sent to the manufacturer for analysis and $325 later I got it back with a warning, that if the gouge had been a few thousandths deeper, or if any further scratches appear on the propeller hub. l can hang it in my Living room and buy a new one.

Shoulder Harness Kits for 140

James I. Purnell, of Manassas, Virginia. asked about shoulder harnesses for his 140 The answer:

Shoulder harness kits are available from Piper and they may or may not break your bank. The part number is 764-981V which contains two seat belts, two shoulder harnesses, hardware and instructions. Price should be under $400, but the Piper prices have been fluctuating widely lately and you need to check with your dealer for the latest price.

This is not merely a bolt-in addition, however. You will need to remove the headliner, reinforce the roof by riveting in stiffeners, install the belts, reinstall the headliner, and paint the rivet heads outside the plane. Obviously, the work will need to be done by an A&P mechanic or by you, working under a mechanics supervision.

This is definitely a major project, but one which gives good results, according to members who have made the installation.

Problem With Nose Wheel Shimmy

Dear Terry,

I am the owner of 844 Bravo, a 1982 Archer, instrument equipped and with a recently installed II morrow 612 Loran which is a great back up.

My problem, however, is a nose wheel shimmy. It is most pronounced when breaking heavily, however it can he controlled by taking weight off the nose wheel and letting off the brakes.

I acquired the plane in May of 1987 and in looking through past repair records I find that this has been a problem for a couple of years preceding my ownership with repair attempts consisting ofbalancing the tire, replacing the scissor bushings and adjustment of steering assembly.

I demonstrated the problem to my mechanic and he suggests the problem might be with unequal braking, however I doubt this. Other than the shimmy problem, the airplane is a beauty to own and fly and any suggestions you may have as to the cause would be appreciated.

Sincerely yours,
William G. Kroncke
Toledo, OH 43613

Dear William,

Nose gear shimmy is a common problem on many Cherokees. Replacement of both the scissor bushings and through bolts often cures the problem, but any loose connections in the steering horn assembly or a defective shimmy dampener can cause the problem.

All of the parts, shown in the enclosed drawing, need to be checked for looseness. The shimmy dampener acts like a shock absorber and when it wears out it must be replaced or a shimmy will result.

With all connections tight and the shimmy dampener preventing oscillation, the shimmy will disappear.

Bulletin: Automatic Gear System

As all Arrow. Lance and Saratoga SP owners are aware, Piper came out with a "mandatory" service bulletin recently in which they directed owners of these planes to disable the automatic gear extension system.

This was the result of a lawsuit which blamed Piper for injuries received when a pilot did not make his field of intended landing after an engine failure. The dead stick landing fell short of the field when the gear extension system extended the gear during the glide.

At the AOPA convention in Las Vegas, Stuart Millar told apacked house that he was reviewing this directive and would possibly reverse it.

Well good news for all owners of these planes. Piper is going to issue a new service bulletin (you may have already received it by the time this magazine reaches you.) Basically, the new bulletin will spell out two alternative methods of compliance. Either disable the system (as was mandated in the first bulletin), or become familiar with the procedures, including emergency procedures, spelled out in your Pilots' Operating Handbook.

Piper will support the automatic system and continue to supply parts for it.

Some owners have already ordered the kit to disable the system and have done so, but most owners will probably leave a good thing alone.

Incidentally, the Piper instructions for disabling the system have a few pitfalls of their own. An article in Aviation Consumer reports that one mechanic, trying to follow the instructions, applied voltage to a series of connections in an attempt to locate the gear horn terminal. However, one of the connections involved supplied power to the fuel gauge at a reduced voltage. A 12-volt charge applied there will bum out the gauges. Beware.

Muffler Failure Nearly Stops Engine

Doug Winston, of Rancho Palo Verdes, California, had a slight problem with his plane, but one which could have caused a catastrophe rather than an unanticipated but on-airport landing.

His muffler failed. Not just your extra noise or slightly decreased power type failure, but a nearly complete engine stopping type failure.

It seems the baffle broke loose aid completely covered the exhaust opening into the muffler.This just about completely stopped the engine aid caused a rapid increase in cylinder head temperature which could easily have destroyed the engine.

Luckily he was near enough Catalina airport to glide to a landing. Had he been farther out he might have put a good plane in the drink.

Just a reminder for everyone to check their muffler regularly and be aware of the potential problem. If anyone else has suffered this type of failure drop us a line so we can see if there is a problem in the tleet at large.

Ring Problem

by Michael C. Koss

I've generally found tlie Arrow to he reliable, but have had a couple of problems that your readers might be interested in hearing about. First, I had been having intermittent problems with rough run-ups, particularly on the right magneto.

It was thought I was having a lead fouling problem on the bottom right or upper left plugs. The problem would usually clear up after running the engine for a few minutes at slightly higher than idle with the mixture control brought back to near peak EGT. But occasionally it would not, and I would have to taxi back and scrub the flight.

After changing all my plugs (which were worn anyway), and checking for arcing in the magneto, we noticed that I was repeatedly getting large oil accumulations in the lower right plug on one cylinder. This and a high oil consumption (4 quarts/hour) indicated a ring problem. It turned out that the oil control ring on that cylinder was badly worn.

Replacing it has cleared up the problem, and engine compression has improved significantly as well.

Wants Details on Granville Strut Seal

Bill Whiston, of Winnipeg, Canada, wanted details on Granville Strut Seal. The answer:

Granville Strut Seal is available by mail order from many supply houses. Just for example, it is available from Sporty's Pilot Shop, Clermont Airport, Batavia, Ohio 45103. The price from Sporty's is $44.50 plus $3.50 shipping.

This is enough for three struts. Basically, you add fluid to an empty or low stmt and then top off the unit with hydraulic fluid and allow the two fluids to mix.

Granville then asks you to make a couple of landings and to allow one week for a complete seal.

The fluid works by softening the seal rings in the strut. It works well, but will not solve the problem if it is caused by a pitted strut or in a case where the strut seal is twisted rather than properly installed in the groove.

Numerous Tips & Ideas

by Cecil Shelley

Starter problems: My bird was a poor cranker with a fully charged battery (Close to 1.300 on the hydrometer...you can use electrolyte of a higher acidity to get the most out of the battery. Any good hattery shop can make up any degree of electrolyte you want.)

I also found the cable terminal and battery terminals glazed with that hard substance that builds there on all batteries. Airtight terminals help. You can achieve this with the use of silicone. After cleaning terminals and with a full battery, the starter spun the motor in good fashion. I haven't changed the battery cable yet.

Instruments: I have had oil senders cause me endless work and grief. If they are causing you untrue (or seemingly untrue) readings the cheapest test is to throw them both (sender and gauge) as far into a swamp as possible. It is cheaper in the long run.

Airspeed indicators are great for making old airplanes fast. I kept getting high readings on letdown on a PA-23 1 was flying. I finally concluded that I wasn't anywhere near 208 mph red line. So I keep an eye on the indicator as I stopped on the runway; it still indicated 1 was doing 40 mph. No wind was blowing, So it was replaced. Older airplanes can surely have tired gauges.

Oil & Fuel Lines: Another tired element I found in my bird was the oil lines. The AI and 1 concluded that all gas and oil lines should be replaced. I did the removal. An aircraft shop made up the lines. This cost was very minimal. The plane is a 1969 140B.

I found lines with the factory band on them dating 1968. The log books said all oil and gas lines were replaced. That asbestos cover over the lines to the oil cooler and others is supposed to keep the heat out and protect the lines. I'm not to sure they don't keep heat in too.

Oil dripping out the lower end of any asbestos cover

could indicate a brittle hose. Most Airoquipt lines start to seep long before they fail. At least that has been my experience over 40 years twisting nuts.

Gear struts: mine were found to be low on oil. The nose gear dry, possibly from engine heat. The oil fill is simple. Let the gear all the way down, attach a hose to the filler port, the other end in a can of aircraft hydraulic juice.

Lift the plane until the wheel is off the ground. Let the plane down and the fluid returns to the can, the remaining fluid is the correct amount to have in the strut, giving the correct air oil ratio. Then pump up the correct clearance. A year later I am having no problems.

New Gyro Instruments & Older Auto Pilot

1 own a 1964 PA-28-180.111April of 1965 a previous ownerreplaced the original vacuum directional and horizon gyros with units that interconnect to an Autoflite II autopilot (wing-leveler with heading hold).

The DG provides heading hold output when the desired course is set to 0 degrees, and the horizon drives the wing-leveler. I'm told by avionics people that both gyros send a radio frequency signal to the autopilot. Because the DG is an old "reverse reading" type and the horizon is antiquated, 1 would like to update these instruments, but do not want to lose the autopilot.

Boxes to convert new gyros to r.f output are prohibitively expensive. (I understand most wing-levelers are driven by the turn and bank indicator, and that newer autopilots are driven by audio frequency signals.) Even if I wanted to keep the gyro instruments as is, one reputable shop quoted me almost $600.00 each to rebuild them.

Someone has suggested updating the instruments but retaining the old horizon gyro mounted elsewhere on the panel, or even under a seat, so that it can still provide output to the autopilot. This does not seem to be an ideal solution. Can anyone help'?

T Killiam
New Haven, CT 06511

Dear Mr. Killiam,

I talked with Terry Wilbourne of Lowe Aviation Instnunents in Macon, Georgia. First of all, Piper offereda number of Mitchell Autopilots under their own names, but he believes the one you have is actually an "Altimatic II."

At any rate, you are correct in your assessment of yourproblein, and, basically, there are two ways to go. One is to convert your RF output to AF. Conversion boxes are available and he suggests you might get a good price from Autopilot Central, Hangar 3, Tulsa International Airport, Tulsa, OK 74158 (918) 836-6418.

The other option would be to replace your instruments with rebuilt models. According to Terry more modem 3-1/8 inch instruments, including a vertical card compass, are available with RF output. The DG (with heading bug) is model number 52-D-57 and the Artificial Horizon is 52-D-56.

Terry indicates he has both models in stock, although they have not yet been rebuilt, and you may want to contact him at (912) 788-7450

Arrow Run Up Problem & Fuel Injection

by James McNeely

The person that has a Piper Arrow and has to lean the engine during run up has aproblem with his Bendix fuel injection. The problem is a seal that is leaking fuel into the fuel injection.

Bendix **has** a bulletin about this problem and how to test for it. I have an Arrow and the fuel injection overhaul solved this problem.

Different Shimmy Cure

by Dale P Jewett

I read with interest William Kroncke's letter about the wheel shimmy in his 1982 Archer. I am sure that all your suggestions are valid, however I encountered a shimmy problem a number of years ago which had a different solution.

A friend had a 1975 Cherokee 140 which shimmied very badly. It was always necessary to hold the nose very high until the last possible moment in order to prevent a violent shimmy!

Close investigations of the nose gear revealed that the nose gear fork assentbly (item 21 in the diagram) had been installed backwards on the piston tube assembly (item 19 in the diagram)!

When the fork **was** turned 180 degrees and installed correctly, the shimmy was permanently cured. He was unable to determine when the fork was installed backwards. The first clue was that the nose wheel fairing slanted severely downward when he installed it.

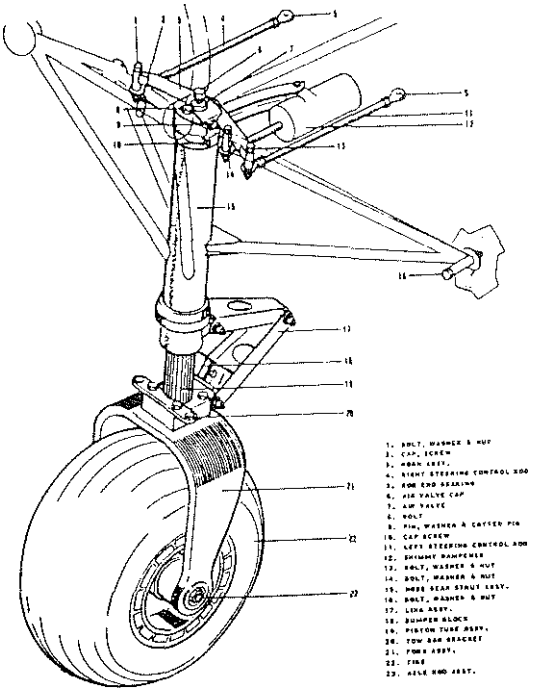

The correct installation on the 140 is when the center line of the nose wheel axle is slightly forward of the center line of the piston tube (note the diagram). That correct installation of the fork causes the castering effect to attempt to hold the nose wheel straight ahead during landing roll-out.

The reversed installation resulted in a reversed castering effect which together with the forward cant of the piston tube resulted in the nose wheel not being able to "decide" what it should be doing and a very violent shimmy.

This was an easy fix, but should be verified by a mechanic knowledgeable about Pipers before attempting any change. I would suggest that you ask your mechanic to verify the nose wheel configuration with a diagram from the Archer service manual.

Questions On Insulation

B. Forero, of Baltimore, Maryland, asked about adding insulation in his 140. The answer:

Insulation on a small plane is designed to cut down on noise - not to keep out drafts. Dense foam insulation which bonds to the aircraft outer skin is the recommended product. Two sources are E-A-R Division, Cabot Corporation, 7911 Zionsville Road, Indianapolis, IN 46268 317-692-1111. The 1/4 inch C-3002-7-25 comes in a four foot by 40-foot roll and should be enough to complete your aircraft.

Another recommended product is Uniroyal Ensolite Type LSC available from the Uniroyal Company, 312 N. Hill Street, Mishawaka, IN 46544 (219) 255-2181. Either of these insulations needs to be glued to the aircraft skin. A recommended adhesive for this job is 3M adhesive #3M77N.

Strut Sealer Problem in Arrow

by Forrest M. Holly Jr.

Here is some information about problems with putting Granville Shut seal in my Arrow. The Arrow's main shut has its Schraeder valve mounted horizontally, perpendicular to the strut axis.

As a consequence of this, and perhaps also because of some top-end "plumbing" in the strut of which I am unaware, I was unable to insert the withdrawal tube down into the existing fluid, nor was I able to add fluid to the strut in the fully collapsed position, even though 1 knew it wasn't full.

Granville suggested that 1 extend the strut to put some fluid in, but of course this wouldn't help if the strut had been already full, and in any case I wasn't able to take enough weight off the shut by myself to extend it at all.

I ended up asking a mechanic to jack up the wing and put in whatever fluid it would accept. As it turns out, the level was low enough that it took just about the right amount, so I'm hoping the seal will tighten a bit (it was only very slowly leaking before.)

I'm writing to alert Arrow owners, and possibly others as well, that the "three easy steps" Granville describes may require the help of a mechanic if you don't have a top-of-shut, vertical-axis Schraeder valve. My mechanic had no idea how one could remove part of the old fluid without disassembling the strut, since you can't get the tube down into the fluid.

This was no big deal - I paid the shop $33 in addition to $35 for the single-strut kit from Aircraft Components in Benton Harbor (Michigan), but I probably wouldn't have even purchased the kit in the first place had I been alerted in the ad that I might not he able to do it myself (recall my shut was not in bad shape, just slowly going down.)

Throttle Cable Fix

by John E. Afdem

Other owners might be interested in the throttle cable problem I encountered on my recently-acquired '77 Warrior II.

Upon purchase of this aircraft I noted that both the throttle and mixture controls were stiff, particularly when the aircraft was cold. After approximately 10 hours of local flying, the situation became worse and I noted a "crunchy" feel in the first inch of throttle movement. On a particularly cool morning (20 degrees F.) the throttle cable separated during engine start.

I had the throttle, mixture and carburetor heat cables replaced. Upon inspection of these cables it appears that the previous owner had injected a lubricant in the cables which became almost glue-like at colder temperatures.

This grease caused the cables excessive stress which led to failure. Had this cable separation occurred in flight, I am certain my appreciation for Nevada's dry lakes would have been significantly enhanced.

Quickie Harness & Other Comments

by Fred Haxton

My aircraft does not have shoulder harnesses which could he very detrimental to one's face in a major accident. I found a low cost solution. It's the "Quickie" made by Hooker Custom Harness, 30 East Jefferson Street, Freeport, Illinois 61032. Phone number is 815-233-5478.

This harness locks into the rear seat belts. Easy to install, quick to remove. You can even use them with rear occupants aboard. And the best part: twenty dollars per set. That's a deal as far as aircraft accessories go. They seem to be well made and come in various colors. They also make other custom harnesses.

Regarding speed mods: I installed flap and aileron gap seals from Laminar Flow - no gain. And installation time was much too optimistic.

By the way, I took the suggestion of one member and polished the prop. There was some gain definitely. Try

spraying some regular hair spray on the prop to retain the shine. It works well.

I've gonen an auto fuel STC and what a blessing. However a word of warning. A static charge can build up whenusing plastic gas cans. There have been pilots severely bumed this way when the static charge ignites the gas.

From what I can gather, when using plastic cans, use a plastic funnel, not metal. The gas sloshing in plastic cans seems to be what develops the charge. This type of accident is something one does not usually think about, and static is a difficult thing to predict.

Paint Questions & Wax Comments

I have a couple ofprohlems. First, let me talk about paint.

The paint on my 180 is old and I think original. I have tried all the suggestions I have read in the Cherokee Magazine. The plane needs paint, hut I know it needs other things worse. So a few dollars on wax here and there and now I have a small fortune in cleaners and waxes.

My wife told me I should just save for a paint job. I have painted all my cars myself, and have been a do-it-yourselfer all my life. I have done just about everything to make a living to raise my six kids and I know that I can conquer the problem of paint!

One day I asked a guy who was working at the airport, detailing a car, about the temporary alternative to a paint job. What happens is after I clean the plane, wax it all up, 4-5 weeks and after some rain and heavy dew, I get these dark streaks vertically.

Then I have to go through the ritual again. All I wanted was a wax that would last longer. Well he told me that I could never get anything over the counter. He told me about this guy who is at the Jacksonville flea market faithfully every Saturday and Sunday on Romona Avenue.

The wax is called Rago Poly Car Coat Auto Polish and Glaze. All I know is it lasts longer than anything else I have tried. The guy suggests if I use it all up and don't like it, he would refund all my money. Eight ounces cost around $6.00. I could get anyone his address. He does more mail order business than flea market sales, he said.

Seeing I need a expensive paint job, I need some advise. What did people do before poly paint. There must be something cheaper than $100.00 a gallon. Is there any articles on do's and don'ts of paint jobs?

Sincerely yours,
Ron Little
Jacksonville, FL 32244

Painting your own plane is quite ajoh - a lot more work than painting your own car, but it can be done. The main thing is preparation.

A coat of aircraft paint weighs about 40 pounds. Before painting all the old paint must he stripped down to the bare metal. The surface must be properly prepared and a base coat applied.

Although a lot has been written on using polyurethane paint, enamels are still widely used and are a good choice, especially for an owner who contemplates painting his own plane.

Randolph Products, the aircraft paint people, publish a book about aircraft painting which is especially useful. It costs only a few dollars and details what must he done. You can write to them at Randolph Products Co., Carlstadt, NJ 07072, or call them at (201) 438-4231

Starting Problem & Impulse Coupling

I have read many accounts of poor Cherokee starting, mostly due to low starter voltage caused by the aluminum battery cables. However, I have a different problem with my 1974 PA-28-151 Warrior.

A year ago. I replaced the aluminum cables with copper. Now the prop spins readily, hut takes one to two minutes of cranking before starting (if it starts at all). 1 use the book starting procedure-crank 10 seconds (mix-rich, engine one-quarter open), if no start, prime, etc.

Recently when I had tried in vain to start the plane for two hours, a friend suggested that I try hand propping (it has worked with his tiger). This sounded odd, but it worked like magic!

I am at a loss to explain why hand propping works over hundreds of spins with a starter and external battery jump. The mags were checked about 6 months ago, and the prop turns over quite fast. I would appreciate any suggestions from the members, as this is becoming worse!

Will Roberts
Apex, NC 27502

Sounds as if you have a problem with your impulse coupler. When you tum the key in your plane to start, it should short out one magneto and leave only the magneto with the impulse coupling. Sometimes, however, these "P" leads are wired backwards so you actually short out the impulse coupling. Your mechanic can easily check this out.

140 Hatrack

As most owners of Cherokee 140's are aware, many of these planes were made with a straight bulkhead right behind the rear seats (which can give you claustrophobia quickly) while others have a hat shelf rack.

Finding a good source of hat shelf racks is quite a problem, but Steve Wentworth, of Wentworth Aircraft, in Minneapolis says he may have a solution.

Steve offers hat racks for $250 plus shipping costs and says they are identical to the original Piper models. For more information contact him at Wentworth Aircraft 3015 Cedar Ave. S. Minneapolis, MN 55407. (612) 722-0065.

Isham Mods Now Available

Isham Aircraft, which has been dormant for the past

few years, has announced they will begin once again selling their Cherokee modification kits (1988).

Renewed interest by Cherokee owners and reduction of part prices by Piper Aircraft were responsible for the decision to re-introduce tlie kits, which have been off the market since 1980.

Isham has STCs for a third fuselage window kit, a wing tip and stabilator tip extension kit and adorsal fin kit.

The third fuselage window kit is FAA approved for the PA-28-140, 150, 160 and 180 models (S/N 20-1 through 28-4377) and tlie PA-28-235 (S/N 28-10003 through 28-11039).

The wing tip and stabilator tip extension kit as well as the dorsal fin kit is approved for the PA-28-140, 150, 160 and 180 "Hershey Bar wing" models. A wing tip extension and dorsal fin kit is available for the PA-28R-180 and 200 Arrows.

The FAA approved STCs are purchased from Isham Aircraft and the parts are then obtained from your local Piper dealer or distributor.

The third fuselage window kit gives added visibility as well as an updated appearance to older model Cherokees.

The wing tip extension, stabilator tip extension and dorsal fin kit produce an increased rate-of-climb, improved stabilator control, increased roll control power, faster cruise speed, a greatly reduced sink rate. and improved landing qualities, according to the company.

For more information contact Isham Aircraft, 4300 Palos Verdes, Valley Center, KS 67147 or call (316) 526-6663

Fuel Tanks Need Structural Screws

Here is a safety alert called in by Al Snyder, of Skycraft Corp., the company which rebuilds Cherokee fuel tanks and which now offers the new wing mount landing light.

Many owners have installed stainless steel screws in their planes to eliminate rust and make screws easier to remove. The rub, according to Al, is that they have been using the same trim screws to replace their fuel tanks. This is a definite No No!

The fuel tanks on Clierokees are structural items which are critical to the strength of the wings. As many readers know, when you remove Cherokee fuel tanks the wings loose most of their strength. It is not even advisable to move or jack these planes when the fuel tanks are removed.

Each tank has 70 screws holding it in place and these are not trim screws, but special screws having a strength of 185,000 psi. Stainless steel screws are made for thisapplication, but they are aspecial screw. Unfortunately, they are not nice arid shiny like other stainless screws as they have less chromium to give them the proper strength.

The correct fuel tank stainless screw has a dull finish and, if not painted, can give off a red oxide which is somewhat unsightly.

One way to tell whether you have the correct screws in your tanks is to examine them. The correct screws are not threaded right up to the head, but have an un-threaded bearing area. This bearing area is included to insure that movement in the tank area does not cause the holes to enlarge.

Comments on Previous Letters

by John Sandlin

Forrest Holly Jr. commented about landing gear position lights in his Arrow, and their delayed operation. He asked about the use of a silicone spray to free the switch plungers. You correctly advised him not to lubricate an electrical switch. Most silicone sprays contain cheniicals that are harmful to switch parts and wiring.

However, before Mr. Holly commits himself to the replacement of a set of $2 switches that will cost $35-40 each from his parts supplier, plus two to three hours shop time for installation and adjustnient, I suggest an alternative.

Mr. Holly might buy a can of TV Tuner control Cleaner & Lubricant, Radio Shack P/N 64-2315, and spray that on his switches instead. This material is made for such an application and is not harmful to switch components or the wiring. At about $1.50 for a six ounce can, it's worth a try.

Scott Gordon warned about cracked propeller spinner bulkheads. His comments and your response were correct and to the point. However, cracked spinner bulkheads are not the norm and owners should look beyond blaniing the manufacturer for selling faulty parts.

In past letters you have pointed out the need to check engine mounts, timing and so on when cracked spinner bulkheads are discovered. Two other areas need to be checked also: the dynamic balance of the propeller on the airframe and propeller track.

Engine components and propellers are given a static balance during manufacture. During assembly its possible that the propeller can be matched to an engine and the slight unbalance of both are added, even though individually the balance of the engine and propeller are satisfactory. A few tenths of an ounce out of balance can be very destructive in a short time.

Much of the stress created by an out-of-balance condition is focused in the propeller attachment flange area which is where the spinner bulkheads are. Hence, they become cracked. Most mechanics of FBO's can put you in touch with someone who will dynamically balance your engine/propeller; the cost is reasonable and its worth it. Checking propeller track is easier and can be done by most A & Ps. It is a simple test to verify that both blades of the propeller rotate in the same plane that is, one blade isn't bent out of alignment with respect to the other.

Non-tracking propeller blades are often the result

of pushing or pulling your Cherokee on the ground using the propeller as a handle rather than using the two bar.

Gail Millard described an avionics problem in his Arrow. The symptoms he described sound like a grounding problem in the avionics suite. I would suggest he have his avionics shop do a thorough grounding survey.

Begin with the antennas and then check through the antenna coaxial cables and connectors, up to the radio chassis, ensuring that all of these components are properly bonded to ground.

Next he should check the power return ground, then the audio grounds - microphones, headsets, speakers, etc.

Incidentally. all of the audio grounds should be taken to the same point on the airframe to prevent noise induced through ground-loops.

Tips On Glareshield Replacement

by Kenneth S. Harter

On the subject of the glare shield in the Cherokee. I recently replaced tlie material over mine. aid it was much simpler than what I was afraid it would be.

I received the material from Airtex. The cost was $15.00 (1988). It was vinyl which covered foam. Replacing it took about two hours, and for those that are not all thumbs like me, the time should he less. The steps:

1. Remove the interior trim around the front of the cockpit.

2. Take off the windshield. This was much easier than it sounds. Take out the screws surrounding it. Lift off the pieces that hold it into tlie airframe, and carefully pull it out.

3. Make yourself a pattern. Do this by folding tlie material (which came in a large rectangle) in half Draw a line where the material meets tlie front of the area where it will be glued down: and of course be very generous. Once you have that portion done, figure where you have to cut in the back half. This side is straight. and much easier to do.

There are a couple of tricky areas. First, around the defroster vents: you may need a second pair of hands to help you unscrew them, and I had some trouble cutting the material in the proper place to accomtnodate the holes: a d second, cutting properly around the front corners of the glareshield presented a problem. Namely, I didn't leave quite enough material to cover there. It is a good idea to put the windshield back into place before making the final cuts just to be sure you have the entire area covered.

4. Glue it on. The Airtex cement works very well, and very fast.

5. Put the windshield back in, making sure that you use that goopy tape (or whatever it is called) around it so that you have a good seal. Replace the interior trim, and you are in business.

My glareshield just about completely fell apart, looked like hell, and was less than worthless. The new stuff makes a world of difference.

His Plane Has Control Lock

Dear Terry,

I do not understand why everyone has so many problems with the control lock. My 140C (1970) has what appears to be a factory installed control lock on the left yoke fastened to the panel by four bolts. The vertical hole mates up nicely with the hole in the tubing.

It is simple in construction. I wonder if Piper still offers them?

Sincerely yours.
Bill Thompson
Erie, PA 16505

Dear Bill,

Unfortunately, you have one of the few Cherokees which did come with a control lock. Practically no one else has them. Just a clean, non-bored control wheel tube and no lock.

Piper did make some planes with these locks, hut then, a pilot decided to lock tlie yoke with a nail rather than the standard lock.

Unfortunately, on the next flight this same pilot then forgot about the lock and was able to start the plane, taxi to the runway and attempt a takeoff with tlie controls locked. As you can imagine, this resulted in a lawsuit against Piper and the rest is history.

The remainder of us are using seat belts or other home made locking devices to secure the controls of our planes.

Revised Arrow Service Bulletin

As many of you must know by now, Piper really did what Stuart Millar said it would about the Arrow - it issued revised service bulletin 866A.

This bulletin is divided into two parts with two methods of compliance. Either the automatic gear extension may be completely disabled as was previously mandated by service bulletin 866 dated June 19, 1987, or pilots acting as pilot in command of one of these planes must become familiar with the information on the system in the Pilots' Operating Handbook.

Obviously, most pilots will select the alternative method of compliance and will not disable a fine system which has received kudos for its contribution to safety since it was introduced on the original Arrow.

Particularly, the service bulletin requires pilots to he familiar with stall speeds, take off, climb, glide and slow flight performance and back up landing gear system operating airspeeds.

In addition, a number of early Arrows were never fitted with an automatic gear override, as mandated by service bulletin 769. Tliis bulletin called for installation of a Piper kit, part number 760 542V. This kit permits the pilot to lock out the automatic override system in case of emer-

gency.

Kit 760 542V sells for $90, but does not include the flap handle cover assembly which is an additional $160, Either of two flap handle covers completes the installation -67917-206V is a black cover while 67917-106V is a bark colored cover.

Congratulations to Piper and Stuart Millar for coming up with a good, common sense solution to a problem.

More Arrow Propeller Problems

A few issues back we told the story of a man who ended up spending several thousand dollars to get his plane annualed when the Hartzell propeller on his Arrow was scrapped because it did not meet minimum tolerance.

Now, asecond report from Joe Jacobson, of Boise, Idaho. Joe's Arrow, too, will not pass inspection because the propeller shanks are not within tolerance.

Hartzell Service Bulletin #136, dated September 16, 1985, specifies a minimum shank diameter of 3.344 inches. New propellers, off the shelf, have diameters between 3.356 and 3.359 inches.

Joe's propeller, however, is 3.322 inches, or .022 inches undersize. That small discrepancy could cost three to five thousand dollars.

And Joe recently purchased his plane. He did not think to check out the propeller. Does anyone?

Anyone contemplating the propeller inspection on his Arrow, or anyone contemplating the purchase of an Arrow had best be aware of this potential expensive problem.

Joe does have one potential solution to his dilemma - a new three-blade propeller conversion. Craner and Rich Conversions of Southern California, has developed an STC for this conversion.

At just over five grand the new propeller is anything but cheap. But it could turn out to be a bargain for anyone who needs to replace his blades.

A new set of standard blades for the two prop set up costs $3,400 (1988). However, you will need to spend another $500 to $1,000 more to overhaul the hub, depending on what the overhaul shop finds when the propeller is disassembled.

So the three-blade prop will cost approximately $1,000 more than the factory-designed version. But for your money you not only get the obvious advantages of lower noise and vibration, but you will have a propeller which will not have to face another inspection in five years.

The three-blade prop will not have problems of rpm restrictions and will cruise comfortably between 2,200 and 2,700 rpm.

According to Joe, however, there is one big problem. Although Craner & Rich have an STC (SA3567NM) on the conversion, the propellers are not yet in production. Hartzell will be building the propeller, but production has not yet started, although it is expected soon. In the meantime, however, Joe's plane is still grounded waiting for a new propeller.

Cable Tension Cures Nose Shimmy

by James P Hanks

My 1977 PA-28-140 for some time had a bad nose wheel shimmy. We went through the rounds of tightening everything. We even replaced the nose wheel tire. The shimmy seemed worse when the wheel pants were installed.

Then it was time for an annual and I asked a relatively new mechanic to look at the problem. He said he had no idea, so he called Piper and they told him to check the tension on the rudder cables to see if they were taut enough. He tightened them a lot to match specifications - no more problem.

I added checking the shimmy damper to my preflight checklist. In particular, I check the bolt that attaches to the piston. It will bend, the lock nut will be found loose, or, worse yet, it can be broken. That produces an exciting shimmy.

When it shimmies, do not use brakes unless absolutely necessary. Use full back pressure on the yoke to take the load off the nose wheel. That shortens the moment arm on the scissors link and helps quiet it down.

The driving force for starting the shimmy can be uneven tire wear. Swap it for a main gear tire if suspicious, and remember to straighten the rudders out when you let the nose wheel down during a crosswind landing. That helps keep the wear even.

Concerned about Repitching Propeller

I keep hearing about and reading about re-pitching Cherokee propellers to 58, 60, 61, etc., and it sounds like an excellent way to tailor the performance of a plane to fit the needs of the owner. However, I have yet to see a table or graph depicting performance vs. pitch. Going to a higher pitch should increase cruise speed, but it stands to reason that it will increase takeoff roll and decrease rate-of-climb.

Also, what about power settings? A higher-pitched propeller will require more horsepower to turn at the same rpm and fuel bum? It seems to me that re-pitching a prop means invalidating the Pilot's Operating Handbook performance tables which are vital to the safe and efficient execution of all flights.

I have talked to a couple of PA-28-140 owners who have gone from a "climb prop" to a "cruise prop" and they say that the plane cruises "a little" faster, but accelerates and climbs a "little slower." This is not enough for me to base a decision on. Sure, I'd like to gain a few mph and decrease GPH, but I want to be sure I can still fly from our 2,500 foot strip at gross weight.

One more thing on this. What about engine wear? Does Lycoming have any objections to re-pitching a propeller?

Tom Jozwiak
Mt Clemens, MI 48043

Re-pitching a propeller is a good way to tailor the performance of an engine to the needs of the pilot. It is a common procedure and can generally be done by most good propeller shops for about $150.

As we all know, the performance of any plane is a compromise between speed and other types of performance. In a plane with a constant-speed propeller, the pitch of the propeller blades is varied to affect the performance of the plane, while in a fixed-pitch plane, such as a Cherokee 140 or 180, this is not possible.

For example, in the Cherokee 140, the propeller is a Sensenich M74DM with a 74-inch diameter and a 58-inch pitch. That is, for every revolution of the propeller, the plane would travel forward 58 inches, assuming 100 percent efficiency.

This same propeller can be re-pitched to make it either a climb prop or a cruise prop. Re-pitched to 56 inches, it becomes a climb prop and will cause the plane to take off quicker and climb more rapidly, but with a corresponding decrease in cruise speed.

Re-pitched to 60 inches would make it a cruise prop, with additional speed for a given rpm, but with a decrease in effectiveness at take off and climb speeds.

The engine manufacturers do not concern themselves with re-pitching. The changes made by a propeller shop would not be so radical as to cause problems with the engine (so long as red-line and other operating parameters are adhered to.)

The problem you have with re-pitching a propeller is that all the performance characteristics change. Take off distances, climb rates, cruise speeds at various rpms, percentage of power - all change and the charts and graphs which came with your plane become useless.

In short, you then become a test pilot and need to determine these criteria for yourself.

Because you have concerns about operating out of a 2,500 foot strip, I would not recommend changing to a cruise prop pitch on your plane. I am sure you would normally have no trouble getting out of the strip, but at high gross and with high temperature and humidity conditions you could run into more of a problem than you care to tackle.

STC Listing Update for PA-28 and PA-32

Several years ago we published a list of STCs for PA-28 aircraft. Well, as the years have gone on, this list has grown by new modifications.

So, in this issue, we intend to bring the PA-28 list up to date. Listed below are the more recent additions to the STC list (since 1982).

You will notice the various STCs on the gap-seal and other aerodynamic performance mods, all of which were acquired since 1982.

And since we have never published a list of STCs for the PA-32 series, that is included here also.

Each listing gives a brief description of the STC and provides the name and address of the owner. Unfortunately, many owners have moved since they received approval and may be difficult or impossible to find. Nonetheless, here is the most complete set we know of.

PA-28 Series

SA630GL - Installation of aileron and flap gap seals (PA-28-140, 150, 160, 235, 28R); Knots-2-U, Inc., 1941 Highland Ave., Wilmette, IL 60091.

SA708SW - Plane Booster safe flight wingtips 101-2B (PA-28-140, 150, 160, 180); Harvey J. Ferguson, d/b/a Plane Booster, Inc., P O Box 564, McAllen, TX 78501.

SA780GL - Installation of aileron and flap gap seals (PA-28-140, 150, 160, 180, PA-28R); General Aviation Corp., Rock County Airport, Janesville, WI 53545

SA1072CE - Installation of wing leading edge cuffs and droop tips, dorsal fin and vertical stabilizer vortex generator (PA-28-140, 150, 160, 180, PA-28R); Horton STOL-Craft, Inc., Wellington Municipal Airport, Wellington, KS 67152.

SA1487SO - Installation of speed enhancement kit (PA-28-140, 150, 151, 160, 161, 180, 181,235,236, PA-28R); Sea Wings, Inc., 1-1 Wintberg Skyline Dr., St. Thomas, VI.

SA4236WE - Installation of inflatable door seal (PA-28-140, 150, 151, 160, 161, 180, 181, 236, PA-28R-201, -201T, 28RT-201, -201T); Bob Fields Aeroaccessories, 5673 Stanford St., Ventura, CA 92003.

SA640GL - Installation of aileron and flap gap seals (PA-28-151, 161, 181, 236, PA-28R-201, -201T, PA-28RT-201, -201T); Knots-2-U, Inc., 1941 Highland Ave., Wilmette, IL 60091.

SA855GL - Installation of aileron and flap gap seals (PA-28-151, 161, 181, 236, PA-28R-201, -201T, PA-28RT-201, -201T); General Aviation Corp., Rock County Airport, Janesville, WI 53545

SA1463SO - Installation of Speed Enhancement Kit (PA-28-161); Causey Aviation Service Inc., Route 1, Box 137, Liberty, NC 27298.

SA1607SO - Fabrication and installation of nosewheel fairings (PA-28-161, 181); Windy's Aircraft Parts, 3508 Greenview Ave., Raiibow City, AL 35901.

SA1580SO - Installation of speed enhancement kit (PA-28R-201; PA-28RT-201, -201T); Sea Wings, Inc., 1-1 Wintberg Skyline Dr., St. Thomas, VI.

SA2171NM - Installation of Precise Flight Speedbrake Sys-

tem (PA-28-201T, PA-28R-201T, PA-28RT-201T); Precise Flight, Inc., 63120 Powell Butte Road, Bend, OR 97701.

SA1580SO - Installation of speed enhancement kit (PA-28RT-201T); Sea Wings, Inc., 1-1 Wintberg Skyline Dr., St. Thomas, VI.

SA1468NE - Six or 13 quart propeller anti-icing kit WAP-101A (PA-28 series); E. W. Wiggins Airways, Municipal Airport, Norwood, MA 02062.

SA913EA - Installation of Elano Corp. beater-muffler system (PA-28-140); Elano Corp, 2455 Dayton-Xenia Rd., Xenia, OH 45385.

SA2052WE - Installation of Hartzell HC82X1-6F/8433-12 propeller (after conversion of engine to Lycoming 0-320-E1A) (PA-28-140); Propeller, Inc., 5802 S. 228th Street, Kent, WA 98031

SA3196WE - Installation of Lycoming 0-320-Dl A engine, Hartzell HC-C2YL-1F/F7663-4 or Hartzell HC-C2YL-1BF/8468A-8R propeller and associated powerplant components (PA-28-140); John Grodahl, 4224 W. Ash, Fullerton, CA 92633.

SA1963CE - Operation on unleaded or leaded automotive gasoline (PA-28-140, 150, 151); Petersen Aviation Inc., Rt 1, Box 18, Minden, NE 68959.

SA1331CE - Installation of 160-hp Lycoming engine and re-pitched Sensenich propeller (PA-28-140, 150, 151); Schneck Aviation Inc., Greater Rockford Airport, P O Box 6417, Rockford, IL 61125.

SA802GL - Modify airplane to fly on unleaded gasoline, 87 minimum antiknock index, (PA-28-140, 150, 151); Petersen Aviation Inc., Rt 1, Box 18, Minden, NE 68959.

SA2213WE - Conversion of Lycoming 0-360-A3A engine to Model 0-360-AIA engine and installation of Hartzell HC-C2YK1-B/766A-0 propeller (PA-28-180); Propellers, Inc., 5802 South 228th St., Kent, WA 98031

SA5679SW - Electrically driven vacuum pump as standby auxiliary pump (PA-28R-200); Aero Safe Corp., Box 10206, Ft. Worth, TX 76114.

SA1762NM - Installation of pressurized magneto system on the Continental turbocharged TSIO-360-C, F and FB engines (PA-28-20IT, PA-28RT-201T, PA-28R-201T); S. G. H., Inc, 1737 West Valley Hwy., Auburn, WA 98002.

SA2145NM - Installation of Turboplus intercooler system (PA-28-201T, PA-28RT-201T, PA-28R-201T); Turboplus, Inc., 1437 West Valley Hwy.. Auburn, WA 98002.

SA2148NM - Installation of Turboplus engine nacelle, cowl flaps (PA-28-201T, PA-28RT-201T, PA-28R-201T); Turboplus, Inc., 1437 West Valley Hwy., Auburn, WA 98002.

SA5681SW - Installation of electrically driven vacuum pump as standby auxiliary pump to the existing instrument air system (PA-28-200T, PA-28R-201T; PA-28RT-201T); Aero Safe Corp., Box 10206, Ft. Worth, TX 76114.

SA1383CE - Installation of Edo Aire propeller governor, Model 34-828-014-12 (PA-28R-201T); Edo Aire, Wichita Division, 1326 S. Walnut St., Wichita, KS 67213.

SA2144NM - Installation of a modified air induction system to the Continental TSIO-201T engine turbocharger compressor (Rajay system) (PA-28R-201T, PA-28RT-201T); Turboplus, Inc., 1437 West Valley Hwy., Auburn, WA 98002.

SA2147NM - Installation of Continental TSIO-360-FB (C) (Converted) engine and associated system (PA-28-201T, PA-28RT-201T, PA-28R-201T); Turboplus, Inc., 1437 West Valley Hwy., Auburn, WA 98002.

SA2167NM - Installation of the Precise Flight standby vacuum system (SVS) (PA-28R-201T); Precise Flight, Inc., 63120 Powell Butte Rd., Bend, OR 97701.

SA1964CE - Operation on unleaded or leaded automotive gasoline (PA-28-235); Petersen Aviation Inc., Rt 1, Box 18, Minden, NE 68959.

SA1189SW - Air Circulator (PA-28-140); Ves Kol, 2805 National Dr., Garland, TX 75040.

SA2285NM - Installation of Cessna control wheels, P/N 0513260-4 and associated installation components (PA-28-140); John H. Lunc., 3833 West Hannont, Phoenix, AZ 85021

SA1258EA - Installation of Cosco Model 78 child restraint system (PA-28R-200; Stuart R. Millar; P O Box 926, Grand Central Station, NY 10163.

SA3071WE - Installation of Bendix PIN 480543 electric auxiliary fuel pump (PA-28-140); Harry R. Delicker, P O Box 746, Strathmore, CA 93267.

SA2280NM - Installation of Silver Instruments Fueltron IG-CS-IP-CSIM UK-CS, of Fuelgard fuel-flow indicating system (PA-28-140, 150, 141, 161); Silver Instruments, Inc., 8202 Capwell Dr., Oakland Airport Business Park, Oakland, CA 94621.

SA4276WE - Installation of SDI CFS-1000, 1001 or FT-100 fuel-flow indicating system and P/N 480543 auxiliary fuel pump (PA-28-140, 150, 160, 180); Del Air, P O Box

746, Strathmore, CA 93267.

Below are the STCs listed for the PA-32 series

SA311NM - Installation of flap extension, spoiler, L/E cuff and optional cambered wingtips (PA-32); Robertson Aircraft, 839 W. perimeter Rd., Renton, WA 98055.

SA3NW - Installation of Van's Aircraft Model VA-1 fiberglass wheel fairings (PA-32-260,300); Van's Aircraft, Route 2, Box 187, Forest Grove, OR 97116.

SA530CE - Install Fluidyne Model 4000 and 2500A skis (PA-32-260,300); Fluidyne Engineering Corp., 5900 Olson Memorial Hwy., Minneapolis, MN 55422.

SA1568SW -Wing leading edge cuff, flow fences, optional wingtips and dorsal fin (PA-32-260, 300); Barbara & Bob Williams, Box 431, 213 N. Clark. Udall, KS 67146.

SA2217WE - Installation of re-contoured wing leading edge, raked wingtips, fuselage flap, stall fences, droop ailerons and dorsal fin (optional) (PA-32-260, 300); Charyl C. Robertson, 1540 Sunset Highway. Bellevue, WA 98007.

SA1486SO - Installation of speed enhancement kit (PA-32-260, 300, 301, 301T, PA-32RT-300, 301T); Sea Wings, Inc., 1-1 Wintberg Skyline Drive, St. Thomas, VI.

SA820GL - Installation of aileron and flap gap seals (PA-32-260, 300, PA-32R-300); General Aviation Corp., Rock County Airport, Janesville. WI 53545.

SA609GL - Installation of aileron, flap, and stabilator gap seals (PA-32-260, 300, PA-32R-300, PA-32RT-300, 300T); Knots-2-U, Inc., 1941 Highland Ave., Wilmette, IL 60091

SA4288WE - Installation of inflatable door seal (PA-32 series); Bob Fields Aeroaccessories, P O Box 390, Santa Paula, CA 93060.

SA932EA - Installation of Pee Kay Model B-3500 seaplane floats and Pee Kay model 3500A amphibious floats (PA-32S-300); Pee Kay Devore, Inc., 125 Mineola Ave., Roselyn Heights, NY 11577.

SA2253WE - Installation of Edo Model FD-3500-21 amphibious floats (PA-32s-300); T. M. Close Corp., Gardner Municipal Airport, Box 464, Gardner, MA 01440.

SA490GL - Installation of a Lycoming 10-540-KIA5 engine, Hartzell propeller and associated components (PA-32-260); Melvin C. Morkert, 915 Montclair Drive, Racine, WI 53402.

SA1557WE - Installation of turbocharged 0-540-E4B5 engine (PA-32-260); Roto-Master, Inc., 7101 Fair Ave., North Hollywood, CA 91605.

SA3736WE - Installation of an engine oil cooler hose (PA-32-260, 300, PA-32R-300); Aircraft Metal Products, Inc., 4206 Glencoe Ave., Venice, CA 90291.

SA3839WE - Installation of an air/oil separator (PA-32-260,300, PA-32R-300); Walker Engineering Co., P O Box 8151, Van Nuys, CA 91409.

SA893EA - Installation of eight quart alcohol propeller anti-icing kit WAP-800A (PA-32-300); E. W. Wiggins Airways, Inc., Norwood Municipal Airport, Norwood, MA 02062.

SA3513WE -Installation of Rajay turbocharged Lycoming IO-540-K1G5D engine (PA-32R-300); Rajay Industries, Inc., 2600 East Wardlow Rd., P O Box 207, Long Beach, CA 90801.

SA4345WE - Installation of cooling louvers in the cop cowling (PA-32R-300T); Marina Spear, 5555 Corso di Hapoli, Long Beach, CA 90803.

SA371EA - Zeiss aerial camera and intervalometer (PA-32-260); Janes W. Sewall Co.l, 147 Center St., Old Town, ME 00468.

SA1310SW - Stretcher in lieu of rear seats (PA-32-260,300); Engineering Plating & Processing Co., 641 Southwest Blvd., Kansas City, KS 66103.

SA2933WE - Installation of rudder, brake and flap system hand controls (PA-32-260, 300, 301, 301T); Terry Doty, 19146 San Jose Ave., La Puente, CA 91748.

SA21NE - Installation of Whelan A600-PR and A600-PG anticollision strobe with forward and tail position-light assemblies as replacements for wingtip lights (PA-32R-300); Whelen Engineering Co.. Inc., Winter Ave., Deep River, CT 06417.

SA1159EA - Installation of DeVore "TelTail" lights on lower surface of horizontal stabilator (PA-32RT-300, 300T); DeVore Aviation Corp., 6104B Kircher Blvd Ne., Albuquerque, NM 87109.

SA836GL - Installation of a fuel-flow meter and totalizer system (PA-32 series); Shadin Company Inc., 6950 Wayzata Blvd, Suite 221, Minneapolis, MN 55426.

SA3670WE - Installation of Silver Instruments Fueltron IG, or IP of Fuelgard digital fuel-flow indicating system (PA-32-300, 301; PA-32R-300, 301); Silver Instruments Inc., 1896 National Ave., Hayward, CA 94545).

SA3774WE - Installation of SDI Model CFS-1000, 1001,

FT-100 or FT-101 fuel-flow indicating system (PA-32-300, 301; PA-32R-300, 301); Symbolic Displays, Inc., 1762 McGaw Ave., Irvine, CA 92705

SA975S0 - Installation of two 15-gallon auxiliary fuel tanks, one in each wing (PA-32R-300); Cypress Aviation, Inc., 3480 Drane Field Rd., Lakeland, FL 33803.

Wing Spar Service Bulletin

The old wing spar AD is apparently dead. It was suspended several months ago, but now seems to have breathed its last breath.

In its place, however, is a new Service Bulletin, Bulletin No. 886, which affects nearly all PA-28 and PA-32 models. The seven page bulletin is somewhat complicated, but is workable with a little effort.

The first thing an owner must do, after ascertaining his place is covered by the service bulletin, is to determine what group his plane falls into. Group I includes the 140,150, 160,180,151,161 and the Arrow 180 and Arrow I1 200 models.

Group II includes the Arrow and Turbo Arrow III, Arrow and Turbo Arrow IV, the PA-28-235, and the Cherokee Six (260 and 300 models) (serial numbers are specified in the bulletin.)

Once you find your model designation, you must determine its usage classification. Classification will determine how the Service Bulletin is complied with. But an owner must have documentation or complete knowledge of the aircraft's entire operating history in order to make this determination. The following are the potential classifications:

Normal: The class most aircraft will fall into - it is the class your plane will be assigned if it does not fall into one of the other classes below.

Severe: This class applies to aircraft which have engaged in severe usage involving contour or terrain following operations (power line patrol, fish/game spotting, aerial advertising, police patrol) where a significant part of the total flight time has been spent below 1,000 feet AGL. (Aircraft with part of total time in this class and part in nonnal class may adjust compliance using a "factored service" calculation.

Extreme: This class applies to aircraft which have been damaged due to operations from extreme rough runways, flight in extreme damaging turbulence or other accidents/incidents which required major repair or replacement of wings, landing gear or engine mounts.

Unknown: This class applies to aircraft or wings of unknown or undetermined operational or maintenance history.

Finally, you then determine your inspection time and repetitive interval from the information below:

This service bulletin requires the wing to be pulled to determine whether the spars are cracked, the same as the former AD required.

The good news is that aircraft which can be shown to fall into the Normal Usage Class need to be inspected only when they reach 62,900 hours for Group I planes, and 30,600 hours for Group II planes.

Thereafter, these planes will require repetitive inspections each 6,000 hours for Group I and 3,000 hours for Group II planes.

Unfortunately, planes with damage history will require wing pulling within 50 hours time in service and every 1,600 hours thereafter. Obviously, planes which fall into either extreme or severe usage classifications or which have unknown or undocumented histories are going to present problems.

Piper, of course, considers this bulletin mandatory. It is, in some countries and for aircraft involved in commercial operations. Otherwise, each owner will have to decide on compliance for himself.

But anyone who wants to sell his plane in the fuhue should be aware that potential buyers are going to know about this bulletin and will be expecting to see some proof of compliance.

This bulletin will be a major problem for many Cherokee owners, but it is a far cry better than the previous AD which required pulling the wings off all Cherokees which had passed 5,000 hours in service. It will, nonetheless, be controversial and we will cover comments on it as we receive them.

Do Not Use Welding Cable For Starter

by John Scheller

I just couldn't keep still any longer after reading the article by Walter Zaba from Chicago. The main reason to change the battery circuit cables is to provide a better conductor with less voltage drop, and after twenty to twenty five years of use most aluminum cables have a fair amount of corrosion--I agree.

There is one other consideration Mr. Zaba and his A&P seem to have overlooked--the mil spec cable specifies that the wire must be covered with a Teflon type covering. The cable covering must be rated at 150 degrees centigrade.

At least one section of the cable passes within four inches of the exhaust stack. Welding cable, even though it is rugged, is not capable of this extreme temperature and would in quick order dry out and become brittle possibly becoming a fire hazard.

On another subject, how many of today's automobiles have windshields that leak? I haven't heard of any. Even windshields that have been replaced don't have leaks.

The product they use is butyl rubber--it comes in a tube that fits a caulking gun, comes in black or white, never hardens, cleans up easily, can be purchased at most automotive supply stores, is inexpensive--and doesn't leak

Another hint--when trying to slide the windshield in place after it has been fitted--Dow Coming DC-4 lubricant will make the job considerably easier!

Servicing Cherokee Wheels & Tires

By Terry Lee Rogers

Wheels and tires may not sound very exotic, but they can become a costly irritant and, in some cases, can become dangerous if ignored.

Aircraft tires, it is true, do not have as much work to do as on a car where they are in contact with the road all the time (hopefully). But because of the necessity of lighter weight, aircraft tires are also lighter duty. And when they are calledupon to work, as during a landing, the forces can be great.

Tire condition and inflation should be checked before every flight. **And** the fact that wheel pants make it difficult is not an excuse to skip the check.

Air pressure is not enough. Even if the tire is holding pressure the tire may still not be airworthy.

Proper inflation is, however, vitally important. An overinflated tire lessens the shock absorbing quality of the landing gear, placing extra stress on the airframe during landing. It makes cord breaks and foreign damage more likely, it results in rapid tread wear in the center of the tire, and it subjects wheel components to excessively high forces. Whew!

And if you think that overinflated is bad, underinflated is even worse. An under-inflated tire will have an unusually high tread wear rate at the tire shoulders. But this is only the beginning.

More important, an under-inflated tire flexes much more than one which is properly inflated and results in rapid heat build up. The heat can destroy a tire from the inside.

Sidewall flex can cause damage and may permit the wheel rim to damage the tire further. Also, under-inflated tires are subject to "creep" around the rim which will eventually cause the inner tube valve stem to shear off and then there will no longer be a problem--there will no longer be a tire.

Check tire pressures when the tires are cold. After flight you should wait three hours before checking tire pressure to permit the tread to cool.

Inflate tires to Piper's recommendation, not that of the tire manufacturers. Piper recommends 24 psi for all three tires on Cherokee 140's, for example.

A good gauge is essential. Several types, all automotive, are available. Some use a central rod in a tube design, while others use dial gauges. Some are designed to show pressure only while the gauge is on the tire while others will register the tire pressure until reset. Some have a flexible tube to connect to the tire valve stem.

Generally, a good-quality dial model with good conshuction is most reliable. A flexible tube is very handy, especially if your Cherokee has wheel pants to contend with. The best-qu l ty gauge can be purchased for about $15.

When you want to add air it is handy to be able to carry it with you. You can use a portable air tank or, you can use either a small portable compressor which plugs into your car or plane cigarette lighter or a foot-operated pump (available from many discount stores for about $10.)

Such an air source is recommended as it will encourage you to add air when in doubt, when you might not if you have to taxi up to the FBO's air hose.

At each preflight you need to check tires for wear and damage. Wear should be spread evenly across the entire tread surface rather than be concentrated at the center or at the shoulders.

If the wear is off side, that is the outside or inside is wearing more than the other side of the tire, you may want to periodically dismount the tires and turn them around on the rims to balance the wear.

Such a condition may indicate that the gear is out of alignment and should be aligned by your mechanic. If the condition exists on the nose wheel, it may indicate a dragging brake or improper towing techniques. Once again,

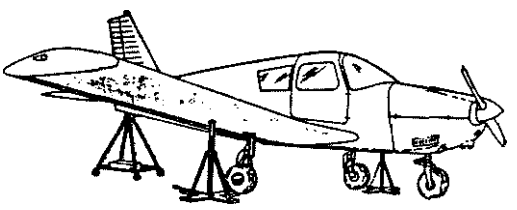

Jacking Arrangement

have your mechanic investigate. But in either case, do remount the tire on the wheel in such a way as to even the wear

Skids are particularly damaging to tires. They result when you land with wheels locked or apply the brakes too hard while the flaps are still down or when hydroplaning on water or slush.

Skids can take months off the life of a tire and, if the skid exposes cord, destroy the tire in one landing.

A skid bum will continue to grow in service, may cause the wheel to be noticeably out-of-balance, and will weaken the area making foreign object damage more likely.

A tire may also have a worn spot caused simply by out-of-balance. The result will look similar to that caused by skidding or hydro-planning, but there will be no bum. The cure is for the mechanic to rebalance the wheel.

To spot either type of problem, merely looking at the wheel, inside the wheel pants, is not enough--you have to rotate the tire through a complete revolution and continuously check the tread.

Check for any sign of damage. Look for cracks, blisters, missing chunks of tread, fluid on the rubber and severe weather checking.

Particularly, pay attention to any sign of internal damage or exposed cords. Bulges or blisters on a tire or a crack through which cord is exposed will require immediate tire replacement.

Cuts may also require immediate replacement. Always replace a tire when a cut penetrates cords of if the cut is deeper than the existing tread grooves and extends the full length from one groove to the next.

Sidewall cuts, too, will result in immediate replacement when cord is visible. Weather checking, in itself, is normal, hut no cord must be visible through the cracks.

Oil, gasoline or hydraulic fluid can damage the rubber in aircraft tires. If you find this, wipe the tire off with a gasoline soaked rag (no smoking please) and then wipe it off with soap and water.

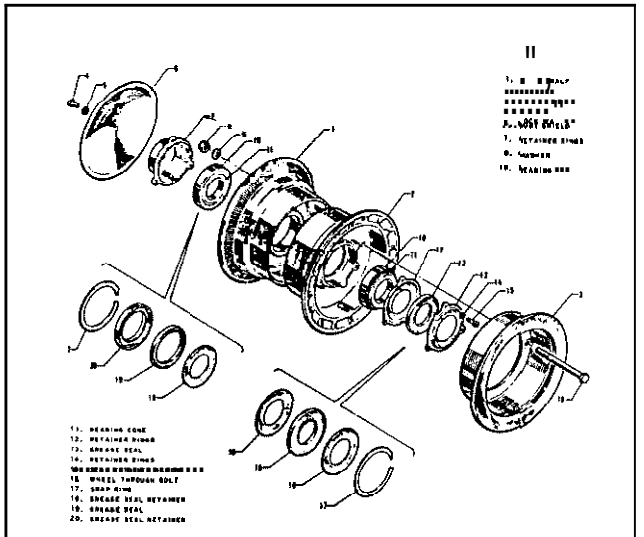

Main Wheel Assembly

Check to be sure the valve stem is not binding because of tire slippage on the wheel and be sure that the valve stem is kept clean and capped.

To be sure that your main gear tires are not slipping, paint a small line across both tire and rim. At each preflight inspection be sure that the line remains intact. If it does not, you know that the tire has rotated on the rim and you should take appropriate steps to correct the problem.

Demounting Wheels And Tires

Demounting aircraft wheels is simple and requires less muscle than the same job on an automobile once you get past the one big hurdle -jacking.

Aircraft jacks are expensive - $94 each in the current issue of Trade-a-Plane. However, most preventive maintenance you will be involved in will require no more than one wheel to be jacked up at a time.

The jacks must be aligned squarely under the jack pad and the plane jacked until the wheel just clears the ground. The plane should remain as level as possible and no sudden weight change should be made to avoid the possibility of jack slippage.

A nose wheel, however, generally does not require a jack. Instead, a weight of approximately 250 pounds is applied to the tail of the plane through the tie down ring (NEVER the stabilator).

When jacking a plane, be sure to check the jack pad for integrity. Jack on a dry surface only, chock all non-jacked wheels fore and aft, shield the plane from the wind, allow no one in or under the plane during jacking, and never jack higher than the minimum height necessary to get the job done.

Once the plane is jacked, you can remove the wheel from the plane. Main wheel fairings are removed with an axle bolt and several bolts behind the fairing. You will have to remove the back plate of the brake system to permit the wheel to be removed from the axle. The back plate is removed by unscrewing the two bolts that hold it to the hack side of the disc.

Remove any hubcaps or dust cover from the wheel. Pull the cotter pin from the axle nut on the wheel you are working on and remove the nut. The wheel is now ready to be removed.

If you are working on the nose gear rather than a main gear, the procedure differs slightly. The nose gear fairing must be loosened and it will then slide up the fork straight up to permit access to the wheel.

Remove the nut and washer from one end of the axle rod and slide out the rod and the axle plugs. Then, lightly tap the axle tube out from the center of the wheel assembly by use of an object of near equal diameter, being careful not to damage the axle tube.

Then, remove the spacer tubes and the wheel assembly and finally, slide down the wheel fairing and remove it by turning it sideways.

Whether you are working on a main gear or a nose

gear tire, before going any further release the air from the tire to avoid any possibility of wheel rupture while you are working. To insure that all air is released, remove the valve core from the stem with a core key (available at any auto supply store.)

Demounting the Tire

The first step in demounting the tire is to break the bead. You simply go around the bead on both sides of the tire and manually press it away from the rim. You may tap the bead gently with a rubber mallet, but do not attempt to use a screwdriver or other metal tool. Such a tool can easily damage the aluminum wheel.

Once the bead has been broken you may disassemble the wheel bolts. Once again, make sure there is no air pressure at all in the tire or the entire assembly may come apart faster than you desire.

With the tire removed you should then examine both wheel halves for cracks, corrosion and elongation of bolt holes.

Minor corrosion may be tackled with a moist sponge and a non-chlorinated household cleaner. Later, you should thoroughly rinse and dry the area and follow up with a coat of zinc chromate primer or aluminum lacquer.

Use amagnifying glass to check for cracks - especially in the area of the rim. Filially, check for elongation of bolt holes and for the condition of the bolt threads. Elongation results from failure to properly tighten wheel bolts resulting in movement of the two halves with respect to each other.

If you find corrosion greater than surface corrosioii or elongated bolt holes, bring them to the attention of your mechanic. He will probably be able to fix either condition unless it is extreme.

Wheel Bearing Service

While the wheels are off the plane the wheel bearings should be serviced. Piper recommends service every 100 hours. The FAA requires inspection as part of the m-nual inspection no matter how many hours the plane has been flown.

The bearings are tapered roller bearings located in a cone which is inserted in a cup, or outer race. The cup is pressed into place and is not removed for servicing.

To get at the bearings you first remove a snap ring and a retainer plate. Then you can lift out the rings, felt seals aid the bearing cone.

First check the cone for any grit or metal particles in the grease. If you find any the bearings should be replaced. If no problems are noted, all components are then rinsed in a solvent, such as kerosene.

Look at the individual hearing rollers for signs of discoloration, pitting or brinelling. Also, note any physical damage.

Brinelling consists of numerous tiny dents caused by haminering of the parts while the plane is at rest on the ground. It occurs when a plane, which is not often flown, rocks continually in the breeze. If noted, the bearings should be replaced.

If the bearings are discolored with a bluish tinge they have been overloaded or lubricated with insufficient grease. The metal has lost its temper and the bearings cannot be reused.

After the solvent bath, blow the bearings being careful not to cause them to spin with the air (blow across the bearings, not around them.)

Finally, the bearings should be greased. Piper recommends high temperature aircraft grease. Soine recommended brands are Texaco MarFak, Mobil Grease 77 or Mobilux EP2 and Shell Alvania EP Grease 2.

Grease is packed into the bearings by placing a glob in the hand and working it into the various rollers. Pack each of the rollers, but do not pack the wheel housing.

Remounting A Wheel

Remounting a wheel is simply the reverse of demounting one. Be careful not.to pinch inner tubes or to damage any parts and be sure that all parts are installed in the proper order. And that is about all there is to it.

Refer to your service manual for proper torques. For a 140, Piper specifies 90 inch-pounds for the through bolts in the nose wheel and 150 inch-pounds for the main wheel. The nuts and washers in both cases must be on the valve stem side.

Piper specifies torque for the axle bolts for the nose wheel - it is 35 to 50 inch-pounds. For the main axle bolts, Pipermerely specifies that the wheel should turn freely with no side play.

Finally, the wheel is safetied with a flat-head pin, washer and cotter pin.

And if the tire leaks a large amount of air during the first week, do not be alarmed. Air has become happed between the tire and the tube and the tire will lose air pressure until all of the trapped air has escaped.

If you actually do have a leak, use a soapy solution to find it. Check the valve stem by applying the solution to the valve core end. If it leaks, remove the old core and install a new one.

Cutting Operating Costs

Preventive maintenance and careful ground operations are the best ways of cutting the cost of maintaining wheels and tires.

Contrary to what common sense might otherwise tell you, landing stress is not the major cause of tire failure.' It is the heat buildup which occurs during lengthy ground handling.

Of course, be careful to keep tires accurately inflated. This is the single best way to cut down the cost of tire replacement. Then, handle the plane on the ground care-

fully; keep taxi speeds down, avoid unnecessary ground maneuvering and be gentle with the use of brakes. Unnecessary braking contributes enormously to the heat build up in tires and their early demise. Certainly avoid pivoting around one wheel.

When flying, keep your touchdown speed as low as possible. Be sure that your idle speed is not too high - this, too, will increase your landing roll out.

Preflight tires and wheels every time you fly. Cracks in wheels and elongated bolt holes are death on wheels. Look for them and periodically retighten the through bolts in the wheels. Be careful not to scratch wheel halves when they are disassembled.

Avoid hard landings and use full-flap, full-stall landings whenever possible.

Take care of your wheels and tires and they will take care of you - and save you a bundle of cash in the bargain.

Changing Propeller Pitch

Recently we ran an article which suggested that the problem with changing propeller pitch is that performance charts provided by the engine and airframe manufacturers are somewhat incorrect.

Ken W. Johnson, of Textron Lycoming, provided the following article which further illuminates questions concerning operation of an engine with a fixed-pitch propeller.

The effect the propeller has on engine operation and on aircraft performance is quite significant.

Aircraft equipped with a fixed-pitch propeller will usually have static rpm (full throttle with aircraft standing still) limitations and full power in flight rpm limitations spelled out in the Pilot's Operating Handbook. If static rpm is below the minimum specified, the engine could be low in power.

However, experience has shown that this is not always true. Faulty induction air systems or faulty exhaust systems have been shown to contribute to indications of low power.

A propeller which is ever so slightly less than perfect may cause the static rpm to be outside the designated full throttle static rpm zone. In addition to these other factors. it is not unusual to find a tachometer which is inaccurate: If an incorrect static rpm reading is observed during the engine check, any one or all of these components could he at fault.

The tachometer may be the easiest to check if a reed tachometer is placed in the aircraft. This "little box" is not permanently attached to the aircraft, but it can quickly verify the accuracy of the standard aircraft instrument.

Knowing the accuracy limits of the aircraft tachometer may eliminate the need for further examination of the engine and propeller or it may confirm the need for further troubleshooting. In any case, consider each component of the system before blaming a low static rpm indication on any one of them.

Another aspect of operation with a fixed-pitch propeller cane in the form of aquestion from an engine owner. He indicated that the propeller provided by the airframe manufacturer had been exchanged for a cruise propeller. (This exchange should only be done with FAA approval.) With the new cruise propeller in use, an increase in fuel usage was soon apparent. Operating costs increased and an explanation was requested.

Obviously, the amount of horsepower taken from an engine will have a direct relationship to the amount of fuel used. Therefore, it can be seen that the use of a cruise propeller increased the horsepower requirement. This deserves additional explanation.

As an example, tlie standard propeller supplied with an aircraft may allow the engine to develop 180 horsepower at 2.700 rpm at full throttle, in flight, at sea level, with a standard temperature. The Lycoming 0-360-A series normally aspirated engine illustrates this example.

Now, let's assume that this same engine and propeller combination is operated at 75 percent power with a best-economy fuel-air mixture setting. Again, assume sea level and standard temperature to simplify and standardize the discussion.

Seventy five percent power will require about 2,450 rpm with a brake specific fuel consumption of .435 pounds per brake horsepower per hour. Also, 75 percent of the 180 rated horsepower is equal to 135 horsepower. Fuel usage at this power and mixture setting will be 58.7 pounds or 9.8 gallons per hour.

The mathematics to arrive at this fuel usage are simple:

180 hp x 75% power = 135 hp

135 hp x .435 BSFC = 58.7 pounds of fuel

58.7 pounds of fuel / 6 lbs per gal. - 9.8 gal/hr.

Having made some assessments about what can happen with a standard propeller, now we will try to see what happens when a cruise propeller is installed. The first thing we must know about the cruise propeller is that it has more pitch than the standard propeller. This means it will take a bigger "bite" of air than the original propeller with each revolution. This bigger bite of air will have an effect on aircraft performance and on how the engine may be operated.

Taking a bigger bite of air increases the resistance to the turning propeller. Perhaps it may be easiest to imagine what happens by considering your hand when held in tlie air stream outside a moving automobile with the palm forward as compared to having the side of the hand forward.

Because of this increased resistance, the static rpm will be lower than with the original propeller. The same thing will be true when full throttle, in flight rpm, is compared to

that of the standard propeller at a similar altitude and temperature. This will reduce the takeoff performance of any aircraft.

Using the earlier example. the engine was rated at 180 horsepower at full throttle and 2.700 rpm. Now, in spite of applying full throttle, the increased resistance reduces the maximum attainable rpm to something less than 2,700 rpm. As aresult of not developing the rated 2,700 rpm, the engine will not develop the full power for which it was rated. Since maximum power is less than full rated, aircraft performance will suffer. This should be considered before a fixed-pitch propeller is chosen or exchanged for a different model.

At this point we must return to the original question. Why does the engine require more fuel with the cruise propeller?

It is an accepted fact that the cruise propeller is more efficient for cruise operation, so it would not be unusual to follow this line of thinking: seventy-five percent of rated power using the original propeller at sea level and standard temperature required a throttle setting to achieve 2,450 rpm. Therefore, without more thoughtful consideration, it seems logical that the cruise propeller might also be set for 2,450 rpm when 75 percent power is desired. Of course, there is an increase in performance, but this can be attributed to the more efficient cruise propeller

Next comes tlie realization that the increased cruise performance is not all efficiency, Instead of 9.8 gallons of fuel the engine is now using a greater amount of fuel per hour. For purposes of this illustration, let us assume that the number is 11 GPH. By reversing the mathematics used earlier, it is possible to estimate the horsepower and percentage of power actually being used as a result of operating the cruise prop at 2,450 rpm with a best economy fuel air mixture:

11 GPH x 6 lbs per gallon = 66 pounds
66 pounds / .435 BSFC = 151.7 horsepower
151.7 horsepower1 180 rated horsepower - 84.3 % power

Assuming a fuel usage of 11 gallons per hour for this problem provides a reasonably realistic example of the change which a different fixed-pitch propeller might create. It also illustrates the need for pilots to change their habits when a propeller is changed.

In addition to tlie change of habits, the discussion shows areal need to reevaluate the takeoff, climb and cruise performance of an aircraft if the fixed-pitch propeller is changed for a different model

Another very important point concerns leaning. Remember that Lycoming recommends leaning to best economy only at 75 percent of rated horsepower or less. It is very possible that leaning to roughness or to peak on the EGT could cause serious damage if the engine is actually producing more than 75 percent of rated horsepower. as in this illustration.

With this information as background, it is easy to see that setting a desiredpower with a fixed-pitch propeller can only be accomplished if the pilot bas a chart which applies to the specific aircraft - engine - propeller combination. Although the power chart for a new aircraft may come from data obtained by test flying with a calibrated torque meter, a fairly accurate chart can be derived for any fixed-pitch propeller and engine combination. Basically, this is done by finding the maximum available rpm at any particular altitude and applying data from the propeller load curve.

In conclusion, remember that a pilot usually only needs to accept the material provided by the airframe manufacturer and use the engine-propeller combination as directed. If a propeller change is made, or on those rare occasions when we question the power available to the propeller, the material here could be helpful.

Locking Gas Caps Prevent Vandalism

by Jerry F. Graf

I would like to respond to a comment in the Cherokee Hints & Tips book. One member suggested he had considered locking caps until he realized that all they would prevent is somebody stealing the caps.

I suggest that some of us are really not as concerned with the loss of fuel as we are with someone placing a foreign substance in the tanks. Have you ever seen what household sugar can do to a gasoline engine?

Gas is cheap compared to an engine overhaul...if everything is able to survive your engine-out landing.

Think about how vulnerable your little low-wing plane is sitting out on the line at some strange little poorly lit airport far from home. Do you check fuel carefully enough to detect sugar? You better!

RPM Restrictions, Running Tank Dry, Leaning With EGT

I own a Cherokee 180-C with a 0-360-A3A engine. I have heard about staying away from 2,150 to 2,300 rpm on some engines, however, nowhere in my Piper handbook does it limit those rpms.

Am I OK to use whatever rpm I want? Also, what about running a tank dry? What is the correct procedure for restarting in the air?

Finally. I have CHT and EGT gauges. When leaning what are the maximum temperatures allowable. I generally run about 1,400 EFT and 400 CHT. However, I do not see much rpm change until I lean to about 1,500 EGT. I think that is a little too hot.

Doyal R. Plute
Independence, KS 67301

The restriction on rpm is spelled out in Piper Service Letter 526. It was imposed because of tip failures of some propellers operated continuously in the high-vibration rpm range.

It applies to all Lycoming 0-360 engines (except the 0-360-A4A) when coupled with Sensenich propeller models M76EMM-0, 76EM8-0 or 76EM8S5-0.

If your plane fits into this category it should have had a supplement added to the flight manual listing this limitation and, in addition, it should have been modified with Piper kit number 760 325V which provides amarking for the tachometer which warns against continuous operation in this speed range.

The best advice concerning running a tank dry is...don't do it. Unfortunately, sometimes after running a tank dry you find you cannot get the other tank to feed properly and you could find yourself making an unscheduled landing.

Nonetheless, sometimes you do accidentally run a tank dry. If this occurs, switch to the other tank, increase mixture and turn the auxiliary pump on. With the propeller wind-milling, your engine should restart in several seconds. If the prop is not wind-milling, obviously you will need to use the starter as well.

If this does not work, try carburetor heat and try switching mags - it could be a problem other than lack of fuel.

If none of this works, then it is time to plan your emergency landing site and set the plane up for a maximum glide.

As to leaning, you lean by the EGT, never by the CHT. If your leaning is causing some weird indication on the CHT, you have probably done some serious damage to the engine - it is not sensitive enough for leaning the engine.

Lycoming engines generally operate in the EGT range of 1,200 to 1.600 degrees. Generally, you are not so interested in the absolute value shown on the face of the EGT as you are in trends and peaks.

As you slowly lean the engine you will note the point where the EGT is highest. This is peak EGT and the reference point from which you will work. Lycoming permits leaning to peak EGT anytime power is set for 75 percent or less.

Generally, you do not wait to operate on the lean side of peak. Although permitted with fuel injection engines of more than 250 horsepower, the fuel flow in smaller carburetor engines is too low to provide proper cooling and possible valve damage will result.

Once you have leaned to peak EGT, you are at what is known as "best economy mixture." It is a setting which is economical and safe to use during normal cruise operations.

By increasing fuel flow until you get 100 to 150 degrees above peak EGT, you lean to "best power mixture" which provides the most speed for any power setting, with a corresponding increase in fuel burn. This setting also provides a reserve of cooling fuel for operation at slightly above recommended power setting.

Obviously, the use of the EGT is not difficult and it provides far more accurate *leaniag information.*

Comments About Propeller Pitch

by John Eddy

I have some comments about propeller pitch which the readers might find interesting.

I own a 150 hp Cherokee with a T. W. Smith major with 300 hours on the engine. While living in Cincinnati, I noticed sluggishness on takeoff on a hot day which was solved by re-timing the magnetos.

The plane is now based at Prescott, Arizona on a leaseback, and its operation at this altitude, with the 58-inch propeller was, in my opinion, unsafe on a hot day with only two people aboard.

The solution was to have the propeller re-pitched to 55 inches and I now have an airplane, not a ground lover. Some numbers at a density of 7,000 feet: 2,400 rpm static, 2,700 rpm at 85 mph indicted air speed and a 400 fpm rate-of-climb, up from nearly zero (my glider experience was very useful when searching for lift with the 58-inch-pitch propeller.)

I do not notice any cruise deterioration. At 9,000 feet density altitude and 2,550 rpm, the TAS was 118 mph, which was my speed during the trip from Cincinnati to Prescott, although I used 2.450 rpm a as the cruise rpm (I never obtained the book number of 130 mph.)

However, you do need to watch your 2,700 rpm redline because that can now be exceeded at full throttle at an IAS above 85 mph. Needless to say I am delighted with the performance of the re-pitched propeller.

Ed Note: Re-pitching a propeller is not a matter to he taken lightly, but it can really make adifference where a plane is operated regularly under conditions of high, hot and *humid.*

Auto Fuel Problems

Auto fuel is being used widely without trouble, but there are potential problems. At CPA we have received a number of letters concerning vapor lock symptoms in hot weather.

The June (1988) issue of Light Plane Maintenance also reported on a problem which occurs in cold weather. Apparently, there is a 99 degree (F) difference in the distillation points of auto fuel and avgas, causing auto gas to vaporize poorly at low temperatures. At extremely cold temperatures, it is possible for the auto gas to fail to vaporize completely resulting in a very black exhaust and a loss of power. The magazine states there should be a low temperature restriction on auto gas operation.

Oil, Propellers & Starting

by Torello Tacchi

My previous Cruiser, N32078, met with an unfortunate accident due to hart starting. Here are a few comments I learned on the way to the "forum."

Fully synthetic oils work great in turbines, computers and the like, with constant speed and no contact with gasoline by-products. Three years on a racing engine dynamo taught me that the important thing to remember with oils is the viscosity at cold and hot temperatures and the boiling points. Today's multigrade oils fit that bill perfectly.

Repitched propellers are o-k if yours is out. but remember: if you want to get off a grass strip at gross aid fly cross-country at the same time, you better have a lot of power or avariable-pitch prop. 1 spent 16 years selling motorcycles and the problems were the same. "I want a bike that'll go wood riding and cruise down to LA." It ain't gonna happen.

Hard starting can be areal problem. 1 learned the hard way.

1 purchased 6203J in June of 1987 (it had been annualed in January of 19871. By November, 1988 1 had scored a valve and cracked #4 cylinder. Not Raving had my hangar finished, I paid for tlie work. $2,500 - a fair price if it had been done right

Ten hours later I had the jug off again and found a broken muffler, pushrods that had no bleed-down clearance (specs call for .028 to .074), mags set at 28 degrees lelt. 32 degrees right.

Skipping tlie details. alter a new muffler and other work, tlie engine finally runs great. The stubborn starter still bellows, but when the second tip of the screw comes up, it is running.

So, if you have starter problems, before you get too crazy, check the basics.

Broken Oil Line Forces Landing

by Larry White

On a return flight to Falcon Field, about 20 miles out, I noticed oil on the windshield in a light, steady stream coming from in front of the cowling.

Watching the oil pressure aid CHT/EGT closely, I made the decision to try to get to the airport. Oil pressure stayed in the green so I called the tower and asked for fire trucks to standby. We made it with little problem -just a little messy.

The problem was found to be the ridged oil line running from the front of the engine on the right side going to the prop governor. The line had cracked around the flare where it fits against the 90 degree elbow fitting.

Probable cause was the adel clamp had broken letting the line vibrate until it cracked all the way around the flare.

It is a good idea to check line and clamps at oil changes. You can bet I do...now!

Comments On Repitching Propeller

by Nick Tulloh

I would like to comment on the subject of propeller re-pitching raised by Toll1 Jozwiak. I am not an expert, but I am pretty sure the following is valid.

Taking "cruise" performance figures as a separate issue from "climb" figures one can calculate the effect of a new propeller pitch pretty much on a linear basis. That is, your cruise speed from a 58-inch pitch will be about 3.6 percent greater than a 56-inch pitch. If you cruise at 125 mph on the 56-inch prop you will cruise about 130 mph on the 58-inch prop.

This is simplistic and disregards inefficiencies, slippage, etc.. but it is very close to correct.

Climb performance, I believe, needs to take more careful note of additional factors, but it would be close, at least as a starting point.

On are-pitch, with no figures available, you could triple the 3.6 percent and allow for an 11 percent greater takeoff run. Then you could check the validity of the figures.

If Tom Jozwiak's strip is paved 2,500 feet, I doubt such a re-pitch would cause problems except in extreme circumstances. Personally, if a 3 - 11 percent greater takeoff run was to be the detennining factor in a go/no-go decision. I would have been taking fuel/baggage/people out already.

Sure, re-pitching a propeller is a trade-off, but if you are willing to operate at less than maximum gross on those hot days, it may be a good one.

Finally, a re-pitch should cost only $40 to $50 if the propeller is in good shape. A figure of $150 should pay for a complete overhaul. One good propeller shop is Whirlwind, in Illinois (312-336-4373).

Scored Piston Can Cause Oil Blow-By

by Mark Hurst

Regarding the letter from D. P. Connelly, his blow by and the high oil usage could be caused by a scored piston.

I had a similar problem a few years ago and through compression checks found the problem. I honed tlie cylinder and installed a new piston and rings. That cured my problem.

On another topic. new copper wiring helped my cranking problem soniewhat. Finally, I rewired tlie battery box with nmnber 2 copper aircraft cables. I did away with the bolt through the positive cable. I ran the number two through the end of the box direct from the solenoid to the battery cable and did tlie same thing on the negative wire. 1 send in a 337 on it.

It cranks so good I can hardly believe it.

Turbocharged Leaning & PA-32 Cowl Louvers

Dr. Irvine C. Lister, of Lafayette, Louisiana, noticed a statement in the magazine which said Lycoming permits leaning to peak whenever the power is set at 75 percent or below.

That statement, however. should have been qualified to refer to "normally-aspirated engines."

Dr. Lister's problem was that his Turbo Lance was burning fuel at the rate of more than two gallons per hour above book. Leaning to peak would bring his fuel consumption in line, hut is leaning to peak permitted in turbocharged Lycomings?

The answer to the question is yes. You can lean your engine to peak EGT unless the turbine inlet temperature gage (TIT) exceeds red-line temperature. Also, according to Lycoming, CHT should not exceed 435 degrees (224 degrees C).

Also, very high altitudes may result in high temperatures which will require additional fuel as well as cowl flaps or airspeed for cooling.

And, of course, the Pilot's Operating Handbook is the final authority on all questions concerning operation of your engine.

Dr. Lister also recommends a set of STC'd cowl louvers to reduce engine heating. a common problem on PA-32 aircraft.

The louvers were developed by General Aviation Technical Services, of Lock Haven, Pennsylvania. Dr. Lister writes:

Before I installed them I was burning more than 20 gph with a CHT of about 435. I am now burning 17.5 gph with a CHT of about 375. I am using a 65 percent power setting in my PA-32RT-30 IT with a mixture setting of 50 degrees rich of peak. The TAS is 145 to 150 knots.

My cowling is cooler after landing. Before I could not put my hand on it and now I can. The louvers do a good job of moving the air out of the upper cowl where it normally is trapped.

Because there have been so many reports of overheating on Turbo Lances, I contacted the present marketer of the STC, Air Parts of Lockhaven, W. T. Piper Airport, Hangar 3, Lock Haven. PA 17745

The company makes available a combination of a new air box, relocation of ducting and the installation of four louvers. They claim the changes cause the engine to run from 35 to 65 degrees cooler than without the modification.

The kit is complete with all necessary parts, instruction manual. STC and Flight Manual paperwork. The company says installation time is approximately one day. An additional day of ground time is needed for paint to cure.

The kit is not cheap - $1,995 fob Lock Haven. But for those who are constantly concerned because of oil temperatures in the area of the red line, it may be inexpensive insurance against premature engine failure.

You can reach Airparts of Lock Haven at (717) 748-0823 or (800) 443-3117.

Gap Seals & Prop Balance

by Walter D. Haskins

I have owned my 1977 Archer for five years and recently installed the Knots-2-U flap hinge fairings, wing root fairings, flap gap seals and aileron gap seals.

Based upon my loran and DME readings, I have gained approximately 10 knots in airspeed. The most notable change, however, is that the aircraft bas a much more "solid" feel about it. Specifically, when approaching the stall during landing or during the flare to landing, the aircraft has no tendency to drop a wing and has a feeling of great stability.

Additionally, I just bad performed the dynamic prop balancing to which some of the readers have referred. For my money this is the first investment an owner should make as the vibration level in the plane has been greatly reduced and it has a much more "smooth feel about.

Technique of Polishing Propeller

by John E. Washburn

Doyal Plute asked about polishing propellers; motorcyclists long ago discovered you can polish aluminum to shine like chrome. The local FAA inspector told me that ordinary props can be polished with no legal problem, so last summer I used this recipe on my 1973 140.

Before dismounting the propeller, mark all parts so they can be replaced exactly. Even though made of aluminum, the prop still weighs 30 or 40 pounds: be careful with it.

After dismounting, remove the paint from the prop; liquid remover from the hardware store is easiest to use, albeit messy. but be certain it will not harm aluminum.

Anchor the prop to a work surface and use a circular polisher to buff it with red rubbing compound. Careful: some polishers have lots of torque!

Only polish the front surface and only down to where it goes into the spinner. Mine had tiny little foundry lines in the surface that would have required excessive polishing to remove. I did not feel comfortable removing that much metal, so I used my usual rule for determining what is good enough on the plane, i.e., "This ain't no antique Rolls."

After getting a dull shine with the red compound, put a fresh bonnet on the polisher and go back with white polishing compound; this is when the high shine appears.

Clean with soap and water and repaint the back of the prop with flat black. If you want stripes on the polished side you will need to mask off the polished area and scuff the surface where the stripes will be with something like 3-M Scotch Brite to get the paint to stick.

Get your mechanic to re-hang the prop and safety-wire it; the bolts are torqued down like a tire to about 28 pounds. Finish your job with a metal polish called Semichrome, which you purchase from the motorcycle shop. and then coat your prop with it. Over time, you will occa-

sionally need to polish with Semichrome and wax to remove oxidation and stains.

This may seem like a big job, hut it really is not; I did the whole thing in one morning. And then I went overboard: I polished my spinner and this summer even polished my air filter cover and landing light retainer.

The front of my 140 looks a bit like a 1950 Studebaker, hut it sure draws a lot of compliments for a 15-year old plane with original paint.

(For more information, the July 1988 issue of Sport Aviation (the EAA magazine) has an article about some guys that polished a Navion (Yes. the whole plane!) Hmmmm.

Shoulder Harness Kit

Sam Duncan, of Myrphy, NC., asked about shoulder harnesses for his Cherokee 180. The answer:

A shoulder harness kit is available from Piper. The part number of tlie kit is 764-981V. The price was about $350 a year ago (1988).

The kit includes new lap belts, two shoulder harnesses and all hardware for installation, including gussets to beef up the airframe structure.

Installation is not easy, as it requires peeling back the headliner, drilling holes and then riveting in the parts. Two people are needed for the riveting operation, as one needs to buck while the other rivets.

Members who have done the work report that installation took in the neighborhood of 40 hours. It is the type of job, however, where you can do a lot of the tedious work, with your mechanic's permission.

Warns of Spar Corrosion

by Mark Hurst

Yesterday I inspected a 140 that had corrosion on the P/N 62411ZZ channel which holds the P/N 62048-03 fitting to which the right spar is fastened.

This one had been tied down outside for 13 years, which may have contributed to the corrosion.

I took everything out of the inside of mine today and found it looked like new. You might alert those who tie down outside to watch for the problem.

Leaky Door Handles Revisited

We recently reported on anew source of cabin leaks discovered by one of our members. His plane was leaking through the door handles.

Well Mark Paladino, of Rochester, New York, had the same problem with his Cherokee. But he discoveredthat you have to be careful where vou place the sealant if you are to stop tlie leak.

The door outer skin creates a little crater inside the door handle cutout. If you examine the area carefully you will see that there is a seam inside this door-handle cup. This seam is where vou will find the leak, and Mark recommends you carefully put a head of sealant all around the seam.

The rain flows down the window, into the cup and then through the seam. Once inside the door, it builds up until it seeps through at the bottom and then soaks your carpeting. As it runs down the inside surface of the panel, the door panel itself does not appear to get wet and this is what makes this leak hard to find.

Fuel Tanks & Engine Tear Down

by John Driscoll

I have enjoyed my 1972 Cruiser since 1976 and would like to relate some of my experiences over the past 12 years.

Fuel tanks: The fuel tanks had been misdiagnosed as leaking prior to my purchase and were "sloshed" with tank sealer in 1975. This "slosh sealer" began to soften and run and clogged the fuel drains after the plane was moved from Syracuse, New York, to Raleigh, North Carolina.

After talking to the Randolph people in Carlstadt, New Jersey, Piper and Skycraft Corporation, we concluded that the problem could have resulted from northern FBOs adding deicing additives to aviation fuels and the high summer temperatures in North Carolina.

The tanks were removed and de-sloshed with six gallons of methyl ethyl ketone (MEK) at my last annual in 1988. My A&P discovered that the leak was caused by a disintegrated section of rubber hose about six-inches long - a $2.00 Piper part. This hose connected the top fuel vent nipple to the vent tube which eventually vents the fuel tank vapors out the bottom of the wing.

The MEK did a great job of cleaning out the sloshing sealer. I have been flying for about a year since the desloshing and there is no hint of a fuel leak. As an aside, I learned the following regarding Cherokee fuel tanks:

Piper changed their fuel tank sealing material around 1969 which generally resisted chemical attack better than their older sealer, resulting in a more secure tank.

The major cost associated with pulling Cherokee fuel tanks involves drilling out rusted screws. Since these are structural screws I had to replace them with the Piper-approved non-stainless types, but would prefer stainless.

Oil pump: I received a letter from an oil company in the spring of 1981 grounding my PA-28. I had fueled at Willkesbarre, Pennsylvania with a bad load of Avgas (too much lead). That bad load of fuel resulted in other aircraft losing power on takeoff.

Fortunately, due to quick, responsible action from the oil company, no personal injury resulted from this bad hatch of fuel. They paid for my engine tear down and inspection and, since cylinder wall damage was discovered, I' opted for a complete engine overhaul.

My A&P discovered that the Woodruff key on the oil pump shaft was "hanging by a thread." An AD had apparently been overlooked. I often wonder what I would have done if my oil pressure suddenly dropped to zero in flight.

Sun Shields for $1.69 a Set

By Steven Lindblom

Here is some information other members may use concerning a super cheap set of homemade heat shields. Hope this information is in time for the really hot weather.

They are just pieces of cardboard from big cartons cut to fit the windows, a little oversized in one direction so they snap in place, except for the ones for the windscreen which slip behind the sun visors (and must be made of fairly flexible cardboard to fit.)

On our first set I covered the cardboard with aluminum foil, using spray-on cement. This looked good, but has turned out to be a little delicate over time. Since then we have made another set for another Cherokee by simply spraying the cardboard with white spray paint which seems to work just as well (that is where the $1.69 comes in.)

These shields were meant only to fill in until we found a commercial product we could live with, but after using them for a summer we don't see any reason to change. They install and remove faster and easier than any others I have used and store neatly behind the rear seat backs. They wear out with time, but they are easy to replace using the old ones as patterns.

Incidentally, since we made our shields I noticed our local lumber yard has started carrying areflective bubble insulating material called Retlectix that appears to be the same stuff used for the commercial plastic bubble heat shields. It costs $3.25 a linear foot, in four-foot widths, and six to eight feet should do most Cherokees, depending upon the number of windows (just a rough estimate - do not take my word for it.)

Wants Muffler & Stack

Lew Bank, of Cottage Grove, Oregon, called and had a problem with his PA-32. During an annual, the muffler and stack was declared a no-go item. But finding one was a problem.

One source is Aero Fabricators, P O Box 181, Lyons, WI 53148, which specializes in rebuilding mufflers, stacks and associated components.

The company has a toll-free number: (800) 558-6868. They advertise a one-day turnaround.

Impulse Coupling; Questions Speed

by Al Weinberg

I owned N409AF for about 12 years. Then one day I had a little trouble starting the engine and the problem got worse with time.

Being and old A&E, my first thought was impulse coupling so I got out and turned it by hand. I listened for the clack to indicate the impulse coupling was working. Not so.

The symptoms? With a good battery, fast turn over, I got no start. But when the battery was almost dead, she would start. A well-worn impulse coupling will not catch the dog.

After replacing the coupling she starts just like old times on the first or second blade through.

Concerning performance claims of 150 mph in a Cherokee 140, I remain a Floridian from Missouri. Here is why:

Prop pitch 58" x 2700 = 156,600
156,600 x 60 minutes = 9,396,000
9,396,000 15280 ft. = 148.29 mph

This is with a "no-slip" prop. A 10 percent slip would give you close to 133 mph. Figures are hard to beat.

Starter Overhaul & Some Comments

by Dale P Jewett

I have experienced some slow cranking problems with my Arrow III and would like to share my experience with the readers.

The starter on the Arrow III - 200 hp Lycoming - is a geared starter, so it has some advantages over the starters on the 140s, but it still can produce slow cranking if everything is not up to snuff.

I load tested the battery on my plane and found it to be o-k. I then went through the entire voltage drop testing as specified in the Arrow III Service Manual.

This was somewhat more extensive than you have described and involved testing the drop in each segment of wiring. In the process, I found a few slightly loose connections which, after cleaning and tightening, gave some improvement, but not enough.

By the way, since this is a fairly new plane (1978) the aluminum cables were found to be in good condition - no corrosion.

I checked the amperage draw during cranking and found it to be extremely high, way above the hook value listed in the Service Manual. Although the starter had been "overhauled" just before I purchased the aircraft, I took it off and had Aero Electric, in Wichita, Kansas, check it out.

They found a badly burned and broken internal connection which was causing very high resistance. This accounted for the high amperage load and slow cranking. This was repaired for only a "minor repair" charge and it totally solved my slow-cranking problem.

It sure made me wonder about the earlier "overhaul." I would recommend Aero Electric very highly. They are a certified repair station specializing in aircraft electrical systems, hydraulic systems and similar Their address is 2414 SW 29th South, Wichita, KS 67204.

By the way, I recommend preheating in all cold weather conditions. I preheat with a Tanis heater prior to all cold weather starts.

I guess the point I am trying to make is that slow

cranking can be caused by any one of a number of faults, and probably the only sure way to cure it is to start at the battery and test methodically through the entire system. I am sure that older planes are more vulnerable to cable problems and that many times the replacement of the aluminum cables with copper may be a great help. But there are many other components in the system which can cause the problem.

I have heard it said that a starter on an internal combustion engine is the most neglected piece of equipment it has. We all tend to ignore the starters in our cars until they completely fail. Quite often, when we have a car that is slow or difficult to start, we jump over to K-Mart or somewhere else and buy anew battery expecting it to solve all of our problems when the fault may be elsewhere.

Stainless Screws

Jerry Gardner provided the names of a supplier of fuel-tank structural stainless steel screws (the AN525-8R9 fuel tank screws):

Aircraft Supply Co.
7204 Parwelk
Dallas, TX 75235

Why Discrepancy in Speed Claims?

Donald W. Nemec asked why speed modification kits appear to give different results on different planes. The answer:

Speed kits do not know one airplane from another and will be just as effective on one plane as on another. They are designed to make a plane more aerodynamically efficient. The problem occurs when we measure the increased efficiency.

The speed mods are not magic. They only do one thing - reduce drag.

With a lower drag, at a given rpm and a fixed-pitch propeller, a "cleaner airframe will be slightly faster than an unmodified plane. Because it is cleaner. however, the engine will have to develop less power to turn the propeller and the plane will therefore use less fuel.

To see what your speed increase is, you must increase propeller rpm to get the same percentage of power.

Putting aside problems of insuring the same density altitude and wind conditions in measure before and after speeds, the only way to determine just what the speed kits have done for you is to determine the speed - before and after - for an engine condition in which the fuel consumption is the same both before and after.

Unfortunately, most CPA members and other aircraft owners, are not aeronautical engineers and do not have elaborate testing equipment. The bottom line is that although it would be difficult to conceive of a speed mod which did not increase performance, the amount of increase and the method of measurement vary so widely as to make almost all comparisons meaningless.

This topic has been debated heatedly for some time and 1 am sure will be contested just as much in the future as in the past.

Carburetor Heat Creep

Burly Pike, of Shepherdsville, Kentucky, complained that his carburetor heat control was creeping out during flight. The response.

The carburetor heat door is held shut by the friction of the control cable. Unfortunately, as the cables age they tend to loosen up.

But before springing for anew cable, try this. The piper Service Manual calls for a spring back of .062 to .125 for both throttle and mixture controls for your plane. The reason for this is to compensate for the natural spring action of the cables themselves.

Make sure that you have a similar spring back in the carburetor heat cable while in the closed position.

If this does not work, then it is time to go control cable shopping.

Clock Repair

by T. R. Thompson

I have a 1976 PA-28-181 and located a source for repairing the original equipment electric clock manufactured by Borg Instruments. Send your clock to:

Instrument Services
433 South Arch Street
Janesville, WI 53545

They have a toll-free number, (800) 558-2674, and a fixed charge of $38.50 for clock repairs as of July, 1988. They are a factory-authorized repair station for Borg Instruments.

Engine Cowlings, Fiberglass Parts

by Ken Rickert

I want to comment on the problem of the top cowling coming off of PA-32 aircraft. At annual time aircraft go through the rigors of a thorough check, but we have seen more and more things which are overlooked on some of the Cherokees.

On the PA-32 this includes the ten parts of the cowling starting with all the connectors and attach fittings.

All Piper cowlings were hand-fitted to the aircraft. The forward pin platesare amale-female combination with a Teflon bushing to secure the cowl. I have seen too many where the bushings are wom out. This allows movement of the top cowl which starts a constant wear on the pin. If unchecked, this can cause separation.

Then there are the side attach fasteners. These are adjustable to maintain a firm fit. These are not meant to be

repaired with cotter keys or nails if they get tired. Please replace them.

And then you need to check the thumb camlocks on the top rear upper cowl. They wear just like tires or brakes, hut how many look at them for wear?

Cowlings are considered cosmetic, but one coming off in your face can ruin your day. At annual you must check these things along with the heat shield and the overall condition of the cowlings, inside as well as outside. A new paint job will not stop the problems that are still forming under that body filler and shiny new paint.

Much has been written about the Arrow lately. Gear door failure is another area of concern forpilots. How many realize the internal wear on a gear door hinge pin or know how to check it?

Simple enough - just check for excessive movement on the right door up and down. The right door hinge takes the most punishment being on the P side of the aircraft. The pin can wear inside the hinge and, unless you catch it, it can fail at the most inconvenient of times.

I have had two come through my shop to see if repairs could he made when half the door was missing. If excessive play is noted on inspection, changing the hinge pins is a good fix, hut don't wait till the door comes off to check it.

I took a tour of ow local aircraft and two out of five Arrows had worn pins in the right nose gear door.

Finally, here is a caution on how NOT to field repair a cowling.

Piper cowlings are manufactured using a combination of cloth, resin and antimony oxide to meet the flame retardant specs of engine area components. There are specific requirements on these materials and they cannot he altered.

But so many times I see repairs that have been done using ordinary resin and fiberglass mat that would be great on a boat or a Corvette, but has no business on an aircraft.

Pilots beware! If you have never seen a fire on non-flame-retardant resin, you do not want to. Flame retardant does not mean it will not bum. It simply means it won't support a flame unless fueled by an outside source, such as fuel or oil.

A few Suggestions On Tires

by Frank J. Mandriota

The tires on my PA-32 seem to need air every few weeks which is a bit of a chore in a suit (guess I had forgotten that the tube tires on cars also needed frequent service.) To ease the task, I suggest two things:

1. Make a ruler about eight inches long and mark the distance from the ground to the horizontal edge of the wheel pants at the wheel centerline. For a PA-32 with Piper wheel pants this is about 6 3/8 inches at 40 pounds tire pressure for the mains, and six inches for the nose. Mark the ruler at a few five pound increments.

This will give you a quick check of pressure without moving the airplane or getting on the ground. It is not reliable on soft surfaces. Each five pounds pressure increment raises the wheel about 3/16 inches.

2. When you do need air, you have to find the valve stem. This usually involves pushing and pulling the aircraft several times. This is easier if marks are made on the tires. I used a white marker and put three dots at the valve stem, two dots at each 90 degree position, and one dot at the 180 degree position.

Strut Trouble

Steve Browne, of South Lake Tahoe, California, complained about one strut which would not compress properly in his 180. The answer:

A strut will remain extended for one of two reasons. Either it is mechanically binding, in which case it will compress upon a landing (or you can jiggle it down by rocking the wing.) Once it compresses it will tend to stay there.

Or it may he overinflated. If this is the case it will tend to remain extended no matter what you do.

I know of no standard measurement of strut pressure. The service manual does not have any values listed. It recommends inflating to the "proper level." The proper inflation should result in approximately two inches of strut tubing showing on the main gear.

Adding or bleeding air from an oleo is apreventive maintenance item which a pilot may perform on his own plane. But unless you are somewhat familiar with the system, I highly recommend against it. The pressures in the system are much higher than in a tire - perhaps 150 to 200 pounds. Carelessness here could cause you to lose an eye or sustain other bodily injury

Gust Lock Cure

by Carter Gorman

About gust locks: in our PA-28-180 we push the control column forward and turn it to the right. We then push the seats forward and slide them right under the arm on the wheel. It is quick (the whole process takes about five seconds) and stable. Severe thunderstorm gust cannot move the ailerons or stahilator. As a bonus, the stahilator is always pointing down and it keeps rain from accumulating, rusting it in the summer and icing it in the winter.

Fuel selector is Rebuildable

by John H. Granger

I thought I would share with you and the CPA some recentresearch I conducted concerning the fuel selector valve on my Cherokee 6

My partner reported that after filing the tanks on a trip all of the fuel in the right tip tank flowed somehow through the selector valve back into the right main tank which

then overflowed through the vent line onto the ramp. All 17 gallons were lost from the tip.

We thought we had a bad valve, hut to make a long story short, it turned out that if the selector handle is not positively positioned in a detent for one of the tanks it is possible to be feeding from two tanks at once. Or, on the ground with the engine off, it is possible to open a path between two tanks which results in a siphoning problem.

Prior to discovering all this, I priced selector valves from Piper at $823 and found out in the process that no overhaul kit exists. I just couldn't see spending that kind of money if I didn't have to and with further research found the manufacturer's address and spoke with them.

I was told that, yes, they could in fact repair the valve and it would cost in the neighborhood of $50 to $100 - a vast improvement over the $828 quoted by Piper. So, if anyone really has a problem with their fuel selector valve, contact:

Shaw Aero Devices
P O Box 80
Industrial Road
Wainscott, NY 11975
(516) 537-1404

They are an FAA approved repair station, so all legalities are met. I sure hope someone can use this information.

Questions on High-Time Engine

Dear Teny,

It is close to overhaul time on our 1979 Arrow IV For the first-time overhaul on the IO-360-C1C-6, which has the reputation of being the most reliable engine in the industry, please give me information on the following:

1. So long as compression, oil pressure and oil usage continue to be reasonable is there any abnormal danger or potential damage to the engine from running it beyond the 1,800 hour TBO?

2. As this is the first overhaul for the plane, is there a lesser need to go for a major overhaul (a rebuilt or factory re-manufactured engine?)

Sincerely yours,
Wayne Plaster
Tampa, FL 33630

Dear Wayne,

This is a frequently asked question and a difficult one to answer. The basic rule is that engine manufacturers' TBO recommendations are just that - recommendations. They are a guesstimate as to how long the average engine will operate in the field without major surgery. It is designed to give the operator some idea as to how much to set aside periodically as an engine reserve to cover replacement.

Of course, as the automobile commercials always state, your mileage may vary. The TBO is an average figure and many engines do not make it past 1,000 hours, while others go 1,000 hours past TBO.

The TBO is not a magic figure at which time an engine can expect to suddenly quit or even to begin showing signs of old age. The engine does not know it has reached TBO and, assuming other indications are o-k, the engine should continue to operate just fine.

Generally speaking, problems do not just pop up on an engine. They develop gradually and usually on the top end. An increase in oil consumption or a chronic loss of compression in one or more cylinders indicates attention is needed.

But even then, on a first-time engine which apparently has been run regularly and operated carefully, a complete overhaul may not be warranted and a top overhaul may be all that is needed to keep the engine running many hundreds of extra hours.

Many times an operator is tempted to simply overhaul an engine to "play it safe." But no tear down of a well-running engine should ever be made without careful checking and some thoughtful analysis.

Fresh Air Vents Hard to Turn

Louis J. Capozzoli, of Baton Rouge, LA, asked about ways to free up stuck fresh air vents. The answer:

Go lightly, indeed, in working on those vents. If you think wheel pants are hard to come by try finding replacement vents.

Stay away from any lubricant with oil or graphite. The best suggestion I can come up with is to use a dry lubricant, such as WD-40 silicone spray. This spray will not attract dirt and will not damage the plastic. Use it sparingly, however, and work those vents gently.

Airflow Systems Intercooler

by Barry Ward

I recently installed an Airflow Systems intercooler on my Turbo Arrow IV, and thought the results of tlns experience may he of interest to other members who are considering a similar modification to their plane.

The Airflow Systems intercooler has been developed by Bill Genevro, the president of the company. At present he has STCs for the Turbo Arrow and the Turbo Dakota. (Airflow Systems, 4210 Sierra Morena, Carlsbad, CA 92008 619-632-7010).

I had been thinking of fitting an intercooler to my plane to reduce the CHT and perhaps to extend the engine life. I finally took the plunge and went for the Airflow Systems intercooler because it was less expensive than the Turbo Plus system. Also, it had the advantage of not requiring panel space to fit an intercooler discharge temperature gauge. I had already run out of panel space.

I had flown an Arrow with the Turbo Plus system and found the constant mental calculation to determine how much manifold pressure to apply as a function of intercooling temperature drop to be something of a hassle.

In the case of the Airflow Systems unit, a new set

of power charts are given which replace the very primitive ones provided in the pilot operating handbook. It should be noted that Piper gives a constant-manifold pressure for a given rpm regardless of altitude. This is somewhat of an approximation.

Another advantage for me was tliat installation time was specified as less than 15 hours. In fact, mine was installed in a day. I was billed for eight hours.

My intercooler was fitted by Mike at Valley Aircrafters (209-686-7401) on the Tulare airfield, located 15 miles southeast of Visalia.

I chose Mike's outfit as he had already installed three other systems. I would strongly recommend anyone in California who is thinking of fitting the system to their plane to have the job done at Mike's shop. His shop rate is $28 per hour. But above all he is a first-class craftsman. When one looks at the front of the plane. the air inlets to the air filter and intercooler look as though they were part of the original cowling.

There are two air inlets fitted on the lower part of the cowling, The air intake on tlie left is the air inlet to the engine. The one on the right is the air inlet to the intercooler radiator. Another advantage of the system is that the air inlet to the engine is no longer taken from above the number one cylinder, Hence, more air is available to cool the right-haid side of the engine.

A new air filter box is fitted whicli lias a foam Brackett air filter. The alteniate air door from the original air filter is removed and riveted onto the new filter box. In this way, the operation of the alternate air door is the same as the standard plane and can be controlled by the pilot.

The cooling air from tlie right-haid side air inlet goes to the bottom of the air/air radiator. The intercooler radiator is of the plate and tin construction. The radiator is attached to the engine mount by three clamps and can easily be removed. The output air from the turbo goes to the intercooler and the original pop off valve is used to protect against an over boost condition. The output of the intercooler goes into the original engine air inlet system

The longest part of the installation and the part requiring tlie most skill requires cutting out boles in the cowling and fiberglassing the new air inlet attachments. These were then filled in, smoothed down and painted,

The cost of the basic intercooler system is $3,495 (1988). However, there is an option whicli consists of an exchange manifold pressure/fuel-flow gauge. This option costs $50 and gives a yellow-tagged gauge which has a new manifold pressure face plate with a red line set to 38.5 inches. Also, the circuit in the gauge whicli lights the overboost light is adjusted to come on at the lower maximum manifold pressure.

Once the intercooler is installed, the engine fuel flow is adjusted by two counter clockwise turns on the high pressure regulator screw. At this point, tlie plane is ready for a test flight. The fuel flow should be monitored on takeoff to check that at red-line manifold pressure the fuel flow is also at red line. Also, the rpm should be at red line.

When we calibrated my tachometer before the test flight, we found it was reading 50 rpm low (i.e., a reading of 2,400 rpm was actually 2,450 rpm).

The new power settings with the intercooler for 65 percent power are the following:

Altitude	2400 rpm	2500 rpm	2575
S/L	28.0	27.2	26.2
2,000	27.7	27.0	26.0
4,000	27.3	26.8	25.8
6,000	27.0	26.6	25.6
8,000	26.7	26.4	25.4
10,000	26.4	26.2	25.2
12,000	26.2	25.8	24.5
14,000	25.8	25.2	23.8
16,000		24.7	23.2
18,000		24.2	23.6
20,000			24.0

My impression of the kit and documentation of the system was very good. All the parts were well packed and there was even a new o-ring to replace the old one in the pop-off vaive.

I was lucky on my installation as we had the assistance of Bill Genevro, who had come to check on the dimensions. Having Bill's assistance helped to bring the installation time down, although the tricky part of the work was the fitting of the air inlets done by Mike. I think that the 15-hour installation time should be easy to achieve by any mechanic.

The cost of the operation was $3,495 + $50 + $224 = $3769.

Since fitting the intercooler I have been on a recent cross-country flight which was my first real test of the system. The flight was from San Jose to Las Vegas; then to the Grand Canyon and back to San Jose via V-244. Most of the flight was at 11,000 to 16,000 feet which was giving a density altitude of 13,000 to 18,000 feet. The plane was at maximum gross weight.

In the plane I have a GEM 603 which is a great piece of equipment. However, it is not possible to give an exact CHT read as each bar represents a 24 degree F temperature spread. This is o-k for nonnal flying, hut not for getting engine test nmnbers.

The following are the results I have obtained. At a density altitude of 13,200 feet with a manifold pressure of 26 inches and 2,450 rpm, the outside temperature was six degrees C. The IAS was 120 knots which gives a true airspeed of 148 knots. The fuel flow as set to give a TIT of 1450 F, the CHT for cylinders one to six were 3501375,3251 2501,3251350, 3251350, 275/300, 3251350.

These values were all one bar lower than what I previously got at the same power settings - 30 inches of manifold pressure with a TIT of 1,500. This corresponds to Bill's numbers as he said to expect a 25 to 30 degree drop in CHT.

On the flight, which was 9.5 hours long, I had ob-

tained a fuel consumption of 11.1 gallons per hour instead of about 11.7 previously, even though I am now running richer with 50 degrees Flower TIT. Again, Bill says he found a one gallon-per-hour fuel saving if one keeps the same TIT,

In cruising flight the air temperature input to the engine is reduced by 60 to 70 degrees F. This figure was again provided by Bill and correlates with the new power charts which, for the same manifold pressure settings, give a ten percent power increase.

The Continental power charts specify a one percent increase for every six degrees F in cooling.

In the climb phase of the flight the CHT cooling is more than 25 degrees compared to the non-intercooled engine. This has been evident on the GEM. The reason for more cooling in the climb phase is that the turbo is working harder and the discharge temperature is hotter giving the intercooler more of a temperature difference to work with.

The only maintenance recommended by Bill for the intercooler radiator is to remove it every 200 hours and flush it out with engine cleaning solvent. This is to clean any oil deposit that may have been generated by the turbocharger. He also recommends changing the Brackett air filter every 50 hours when the oil filter is changed.

Concerning whether it is worth the expense, it is obviously difficult to do a rational cost analysis. In my opinion the advantages are:

1. Intercooling a turbocharger is the correct technical solution to removing the heat built up in the cornpressed air. This helps the engine to run cooler and reduces the risk of detonation. One of the problems with the Turbo Arrow is that the engine runs hot, especially on climb out in hot weather and at high-density airports. The intercooler does help cure this problem.

It should he noted that assuming I can make it to TBO, the engine replacement costs are about $8 per hour Hence, by running the engine cooler one can extend the engine life by a few hundred hours, one has saved on the intercooler costs.

2. The fact that the plane has an intercooler should help when selling it, although you may not get all the money back.

3. There is a slight reduction in fuel consumption which may save one or two dollars an hour on fuel costs.

I would also like to point out that as well as the intercooler I have had fitted cooling louvers under the cowl and I have high pressure magnetos with air filters. I consider these two modifications important to the operation of the engine. Also, they are not too expensive to buy aid fit.

Self-Taught Course in Carburetor Heat

by Robert J. Goercke

This concerns a subject I am sure we are all familiar with, but I have never seen anything written about - carburetor heat. Even the POH for my 1962 PA-28-160 is very vague. The entire section follows:

"The continuous use of carburetor heat during cruising flight decreases engine efficiency. Unless icing conditions in the carburetor are severe, do not cruise with the heat on. Apply full carburetor heat slowly and only for a few seconds at intervals determined by icing severity." Not much to go on.

On a springtime VFR scud-running trip from North Myrtle Beach, South Carolina, to Midland, Virginia, with a temperature of 65 degrees, a humidity of 100 percent, significant haze and a low ceiling, I learned a lot more about carburetor ice.

Shortly after take off from Grand Strand Airport (CRE), my engine developed the tell-tale signs of carb ice - roughness and loss of rpm. A pull on the carb heat control verified it with a return to smooth running, but a loss of about 200 rpm.

After a few seconds I pushed the control back in, like the book said, but the roughness returned almost immediately. In my flying instruction I was taught that carb heat had to he full on or full off and that partial heat should never be used. Not true!

The hook says not to cruise with carburetor heat on because you'll lose efficiency. So what? A plane will fly with 50 percent power and I had plenty of gas. With those thoughts in mind I decided to continue on instead of turning back. Besides, there are many good airports in that area in case I changed my mind.

1 continued pushing and pulling on the carburetor heat control for awhile, hut finally decided that it just wasn't going to work and decided to leave it on. I found that with full carburetor heat, to maintain a reasonable airspeed and maintain altitude I needed full power.

The manual says that "full throttle operation with heat on is likely to cause detonation." So I decided to try partial carb heat. I found that starting with full heat and a smooth running engine, I could push the control in about a quarter inch, gain hack about 100 rpm, and not pick up any ice.

Then I could reduce the throttle and still maintain airspeed and altitude. I continued reducing heat and maintaining 2,550 rpm until I detected a small rpm loss due to ice build up (it sure would be a lot easier with a carburetor ice detector!)

Once I established the best setting for heat and throttle I sat back, ready to enjoy the flight: hut my curiosity wouldn't quit. Power is lost when using carb heat because the hot air creates a higher density altitude, the same as flying on a hot day. I estimated a 30 degree temperature rise or 95 degree air temperature. Cruising at 2,000 feet MSL (altimeter set to 29.92) and referring to achart, I found that I was operating at the equivalent of 5,000 feet density altitude.

According to my POH, 2,550 rpm at 5,000 feet is 75 percent power and it is recommended to lean the mixture. Leaning for maximum rpm and reducing the throttle to 2,550 rpm (it sure would be a lot easier with an EGT!), I was finally set up for the optimum cruise under not so desirable conditions.

The rest of the flight was smooth (not much turbulence on those stable-low pressure, scuddy days.) I occasionally reduced the carb heat to see if the conditions had improved, but they weren't going to that day. After three hours of straining my eyeballs, craning my neck looking for other fools flying that day (I didn't see any and the good guys at ATC had plenty of time to chat with me) and completing a self-taught course in carb heat control, I finally reached my destination, touching down at Warrenton-Fauqier airport.

My wife had finished her book and my son woke up from his nap in the back seat, totally unaware of the tense goings on, and wondered why I was so sweaty on a nice cool day (It sure would have been easier with an instrument rating!)

When I topped off the fuel tanks I could fill in the missing piece of the carb heat puzzle - lost engine efficiency.

I keep accurate records of fuel consumption for all my flying, most of which is cross-country.The rate rarely varies from the longtime average of 8 gallons per hour. With a low power setting and careful leaning I have gotten 7.1 gallons per hour on a 200 mile trip. On the above hip with the procedure I described, I got 10 gallons per hour, or a 25 percent loss in efficiency.

This is a good number to keep in mind if you choose to fly with carburetor heat on, especially if your fuel supply is low. I would rather stop to fill my tanks than take a self-taught glider pilot course.

Problem With Slipping Seat

Ronald D. Dyas complained that the seat in his 1974 Archer has been slipping back one notch on takeoff The answer:

This problem has been a big one for Cessna owners. In fact, Cessnas have been hit with an AD after several accidents resulting from seat slippage. Worn seat tracks are the big problem there.

However, we have not heard of a problem with any of the Piper planes, at least yet. There are only four parts which are likely to be at fault: the plunger, the spring, the bushing and the seat track itself. (See drawing)

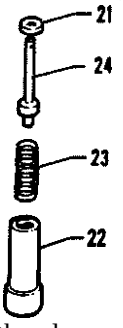

Check to be sure the plunger moves freely in the bushing. Any dirt or binding here will prevent the seat from locking. The springs must be strong enough to cause the locking plunger to engage the seat track and if the unit is disassembled, it would not be a bad idea to replace the spring with a new one (P/N 50111-00).

It is not possible to say for sure whether the worn seat track caused the problem, but it certainly would make sense to switch seat tracks from left seat to right to see if it cures the problem. If the plunger assemblies appear to be working freely, the seat track is almost certainly the culprit.

Landing Gear Indicator Failure

Eugene J. Mankinen complained of a dim left gear light on his Turbo Arrow. The answer:

If your dim light indication were present on all wheels instead of just one, I would suggest a faulty instrument panel switch (or an improper ground).

However, because yours involves just the left main, the problem is either in the microswitch or in the indicator bulb and socket.

Make sure you check the bulb and socket for good connections. You might also swap bulbs from right and left mains to see if that makes any difference. If the problem is in the microswitch, make sure the switch is properly adjusted as specified in paragraph 7A-36 of the service manual before you buy a new switch. You might try improving the contact in the switch by cleaning it with a product such as Radio Shack television tuner cleaner and lubricant.

New switches are available from Piper.

Unfortunately, the price is high. They listed for $219 a year ago (1988).

One member, however, traced down the original manufacturer of the switch. The switch was a ISE1 manufactured by Micro Switch USA. The price was $22.90 through Consolidated Parts in San Jose, California (408) 435-1200.

Cabin Vent Repair

By Lloyd P. LaPlant

Members frequently ask about stubborn fresh-air vents of the "eye-ball" type. My experience has been that the only way to free up these vents is to disassemble them. Lubricants usually do not help.

Also, new units cost $31.15 each and are not necessarily freely operable. I recently bought two new ones and wasted my money. When one of them was already too tight to turn, I experimented on my older ones and now have two operable spares. Here is my method for a 1973 180:

I) Remove the him plate from around the vent. It is a tight fit, but it can be slipped off.

2) Remove screws that hold the vent assembly to the fuselage housing and remove the assembly.

3) On the interior side of the assembly is a large bright metal snap ring which must be removed. Unfortunately, it may be a mean task to remove because the manufacturer did not provide a clearance notch at the split to facilitate removal. I use a variety of dental picks and probes to get the ring out. (These picks are also great for cleaning

spark plugs.) When the ring is removed, immediately modify it by filing or grinding so that it is similar to the drawing.

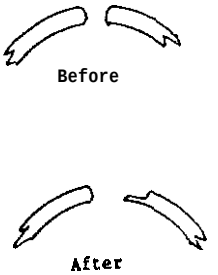

4) Under the snap ring is another full ring which is not flat, but crimped slightly at six places to provide pressure on the eyeball when it is installed (glaucoma?). Flatten these crimps somewhat by gently tapping with a small hammer on a hard surface.

5) Reassemble the unit and test it. If too loose or too tight, disassemble again (now the notch is appreciated) and either re-crimp slightly or flatten some more of the full ring.

6) Repeat as necessary

7) Before final assembly, clean all parts of dirt,

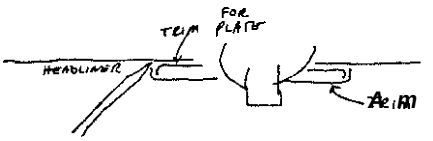

etc., but use no lubricants.

There is another small snap ring and compression ring holding the "open" and "shut" butterfly valve in the eyeball itself. I have not found it necessary to remove these parts, but to do so the same procedure applies.

Mess Less Filter Change

by Milton E. McLain

How to perform your routine spin-on oil filter removal on your Lycoming 0-360 without spilling a drop of grungy oil?

You could shell out $14.95 for whatever is sold by some suppliers as a "special tool" to prevent oil spilling during filter change. I assume they perform as advertised.

Or, you could simply rescue an empty 112 gallon polyurethane milk bottle from the garbage, cut out the bottom and part of one side as you would to make a scoop.

Simply slide this modified milk bottle below and around the filter before unscrewing. Be sure, of course, to have the milk bottle cap in place.

When the oil begins to run out between the flange and filter gasket it will be collected in the milk bottle. The collecting bottle should be held in place below the filter until the filter has been completely unscrewed to ensure collection of all the waste oil.

Voila! A neat oil filter change! And you saved enough for about one-half hour's worth of fuel.

ESSCO - Source of Manuals

We get a lot of calls from people who are looking for manuals for their airplanes. Piper offers some manuals and others are offered only on microfisch (used microfisch readers can often be found in the pages of Trade-a-Plane.)

But for most people, a hard-copy printout of their manuals is highly desirable. For a hard print out of most aircraft and accessory owner and service manuals contact ESSCO, 426 W. Turkey Foot Lake Road, Akron, OH44319. (216) 644-7724.

Aluminum Cables Still Cause Problems

by Milton E. McLain

I have just installed a set of copper battery cables in N44556, a 1974 Archer. I thought my experience might be of interest to other owners.

First, I had experienced no acute starting problems. The prop, however, did turn over somewhat slowly - although the engine never failed to start with reasonable promptness in the 14 months I have owned the plane.

Today I installed (with the assistance of my friendly mechanic) a set of copper cables plus the battery box modification kit which eliminates the braided straps to the battery terminals.

A most interesting discovery was made during the new cable installation. I had earlier carefully cleaned and treated each connection of the aluminum cables with an anti-oxidizing compound obtained from the local electrical supply house and designed to maintain low resistance in aluminum wiring connections.

In the process of removing the old aluminum engine block-to-fuselage ground cable, the cable came apart at the crimped fitting on the engine end! It was obviously almost completely corroded through.

I am happy to report that the operation was a decided success and that N44556 now turns its propeller at a most respectable rate, leaping to life much sooner. Total time required for two persons inexperienced in this procedure was about four hours. We had no problems following the cable manufacturer's instructions.

So even if you are not experiencing acute starting difficulties act now and avoid the inevitable. The aluminum cables will eventually fail.

Engine Kick-Back

by Howard Staats

I had been experiencing a problem with my Cherokee 140 that needed attention. The problem was also noted on another 140 here at South Albany airport.

The problem was every time I started my Cherokee, especially when it was cold, it would turn over and then kick back sharply. This became very severe when I put jumper cables on the plane off a large-size 12 volt battery.

Thanks to three friends that are very knowledgeable we found that the right mag was not shutting off during starting. We traced it to the ignition switch. It seems that with the Bendix mags a ground wire is required on the switch. My switch did not have this wire. When we installed the wire the problem vanished - no more kickback.

We also have a Cherokee Six that experienced engine kickback to the extent that major damage was done to the starter and, it is believed, to the gear that runs the mags, causing in-flight engine failure on two occasions. Luckily, the first time this plane made an airport and the second time a farmer's field.

Wing Walk Repair

by Bill Metzger

For all Cherokee owners there comes a time when the wing talk or safety walk needs replacement or repair. If you are like me and many other Cherokee owners, you will probably have the wing walk that comes as a stick-on sheet or sheets, like an enormous piece of sandpaper.

For Cherokee owners, you can order Piper part numbers 494718 and 494720. The first is a sheet 18 inches wide and 56 inches long for the wing and the second is for the wing flap. The cost, at present (1989), is $12.53 and $2.43 respectively.

If you need to repair the one on the step it is part number 65431-00 and costs 70 cents.

The first and most difficult part of the job is stripping off the old wing walk. For this I used a stainless steel putty knife to slide under the old stuff and peel it away. Do not be afraid ofpulling off the paint underneath. It shouldn't happen if you keep your putty knife at a low angle.

After the old wing walk has been removed, you will be left with the old adhesive stuck on the wiug. Trying to remove this with the putty knife will probably damage your paint.

Instead, buy a can or two of "Goof OW' by Atlanta Distributors, or a 3-M adhesive or decal remover. It can be found in most paint stores and runs about $4 a can.

Spray enough "Goof Off" on the old adhesive to soak a 12-inch by 12-inch area without letting the fluid run down your wing. It will not hurt your wing, hut it is a bit expensive to waste.

Wait a couple of minutes until you see the adhesive bubbling up and the rub it loose with an old rag. I recommend wearing rubber gloves for this part since the chemical might irritate your skin.

Move up the wing, removing the old adhesive. One can of "Goof Off' should do the job unless you have particularly stubborn adhesive. Mine was 19 years old and well-stuck to the wing. I had a couple of spots where the paint needed some touch-up and I took care of it with some zinc chromate spray paint and a can of gloss white polyurethane.

Now you are ready to put on the new wing walk. You will need the assistance of a friend because the large sheet is very unwieldy. Before you remove the protective backing, lay the sheets on the wing and flaps and see how they will fit and how you want to position them.

You do not want to put it right up against the fuselage, but out an inch or so. You can mark where you want the new wing walk to go by using a #2 or softer pencil on your wing.

Once you know exactly where you want it positioned, remove the backing from the large sheet. Lay it down on the wing within your marks, starting forward over the skin joint, smoothing it with the heel of your hand as you go to prevent air bubbles.

You can use a rolling pin to better set the walk to the wing. Once the sheet is finally stuck down, do not peel it up again because you will stretch the sheet and it will not lay flat.

Next, apply the walk to the flap, smooth it out and you can stand back and admire your handiwork. Use the same procedure on the step.

Do not forget to make a notation of the R&R of your wing walk in your airframe logbook to comply with FAR Part 43

Prop Overhaul Needed

by Ted Smith

I recently encountered a situation with my Cherokee that I feel should be passed on to the readers.

I own a 1962 PA-28-150 which I purchased in 1983. I made the mistake of selling 5446W in 1985, but I was able to buy it back from the "interim owner in 1986.

While he owned the plane two significant things occurred. First, he installed gap seals, hinge fairings, aftermarket wheel pants and "speed strips" on the wings, all of which he claimed made a significant improvement in cruise speed.

I spotted the second "modification" while inspecting the plane on the ramp one day several months before I repurchased it. The corner of the tip of one of the propeller blades had lost about 1/32 inch of metal, the obvious result ofaprop strike. A local shop dressed it out and it looked just fine.

Several months later, when I bought the plane back, I was disappointed to find that the speed modifications had little or no effect on the cruising speed. It still hued out at 134 mph at 6,500 feet, about the same as when I purchased it originally.

Last month, after several vibration-related problems had to be corrected, my mechanic suggested I have the prop balanced. After checking, it was found to be not only out-of-balance, but one blade was one and a half degrees out of pitch. The maximum allowable difference, according to the manufacturer, is 2110 degree.

I was told then to overhaul the prop. (Yes, to my surprise, fixed-pitch props can he overhauled.) And $175 later I test flew my shiny "new" prop.

To my amazement, the true airspeed at 75 percent power had increased to 149 mph. Not believing the airspeed

indicator, I tracked to and from a local VOR with DME and checked time/speed/distance over a measured 100 mile course. The results were tbe sane - 130 knots.

The point is, props are much more delicate than I had imagined, and there is no such thing as a minor prop strike. If yon haven't had your prop checked lately, it might be wise to do so. Just for the record, my prop is a Sensenich M76EMMS-0-60 powered by a Lycoming 0-360-A4A 180 hp engine. But that is another story.

Cannot Locate Fuel Tank Sender

Arthur G. Allen complained that he could not locate a fuel tank sending unit for his 1966 Cherokee. His answer:

Indeed, the old-style gauges and sending units are extremely rare, and I know of no one rebuilding them in the field.

Luckily, they are pretty trouble-free and rarely give problems. The older units were manufactured by AC and designed to run on one and a half volts. They contain a precise resistance wire and are not available today. The only source would be salvage yards, but even then you may have problems as several variations were used and you would need to match up the units to be sure of getting the right one.

Of course, the first question to ask is whether the unit is actually bad. The most common problem is a leaky float which fills up with gasoline and you end up with no reading. A pinhole can be soldered and the float repaired once it is emptied of gasoline.

The sending unit itself can be repaired, but you need to be careful. Al Snyder, of Skycraft, has repaired several of these, but says you must be careful not to tear up the wiring, especially when turning the lugs. You must not turn the center portion when you are removing the nuts or you will ruin the unit. Two grommets hold the unit together and generally it works fine when cleaned up.

Inflatable Door Seals

by Donald R. Hellinger

I have a PA-28-180 I have owned since 1966. In that time I have replaced the engine, had it painted, reupholstered, installed a KX-155 navcom, KR-86 ADF, a II Morrow loran and a Genave business band.

I could never get the door seal to keep out terrible wind noise, though, until now. I have just had an inflatable door seal put on and it really works. I a n enclosing the information on this very interesting product.

ED Note: The inflatable door seal is available from Bob Fields Aeroaccessories, 340E East Santa Maria, Santa Paula, CA 93060 (805-525-6236.)

The system comes in three varieties, electric, deluxe manual, and economy manual. The prices, respectively, for both the PA-28 and PA-32 series is $469, $327 and $257. For PA-32 owners who also want to do the rear-passenger1 cargo door, the price (electric only) is an additional $353

The seal replaces the existing door seal and the manufacturer claims it cures both water leaks on the ground and air leaks in the air.

Pitot Cover, Jacking Tip

by David W. Traner

Here are two suggestions which may benefit other Cherokee owners:

1) To make a pitot cover take the plastic bag that an aviation spark plug comes in and cut one end off. Heat a nail with a torch and poke two holes completely through both sides near the other end. Tie a bunch of bright yarn from one hole, but leave the other one open to let air out to avoid "pressurizing" the system when applying the pitot cover.

2) When jacking up your Cherokee, one problem is that the struts tend to extend as you jack, causing you to raise the airplane dangerously high in order to get the wheel to clear the ground. To avoid this is simple. Before jacking the airplane up, place a block (or blocks) between the scissors and the strut. This will stop strut extension. If you take the wing up two inches, the wheel goes up two inches and you can then remove the wheel for bearing repacking, etc.

By the way, I do not have aircraft jacks and I am tied down on a ramp (no hangar) so I jack mine up as follows:

A) Place blocks on the side to be jacked (as above).

B) Untie the side to be jacked. Chock the other side.

C) Place a large stump under the jack point.

D) Place a common floor jack under the jack point (on the stump).

E) Place a five-inch square piece of 314 inch plywood over the end of a floor jack and raise the plywood over the end of a floorjack and raise this until the jack point pokes into the plywood (it cannot split the plywood block.)

F) Jack until the tire just clears the ground.

G) Remove the tire.

H) Place blocks under the axle.

I) Lower the axle onto the blocks.

J) Heave a sigh of relief.

Using this method the aircraft need only be elevated a minute or two at a time.

Note: the blocks keep the jack from rolling.

Wants Heated Pitot-Static Head

Richard Gardiner complained that he could not get a heated pitot head for his older model Cherokee 235. The answer:

For some reason the retrofit kit from Piper is only available for 235s with serial numbers from 10487 and up. This is interesting since the heated pitot has been available since the first 235 rolled off the line at Vero Beach.

Because the pitot was a standard assembly, avail-

able from Piper, you will not need an STC to install it. You need merely locate the parts and report the change on a 237 form. The heated pitot is part number 69041-02, which replaces part number 65790-02, the non-heated pitot.

You will also need a switch (P/N 487771) and a circuit breaker (P/N 454658) as welt as enough wire to complete the job.

Ski Tube & Other Hints
by Dennis P. Brown

My Arrow has a ski tube installed in its tail section which holds two sets of skis or poles. I do not know who holds the STC or if the company that installed the ski tube is still in business, but I am enclosing a copy of my form 337 and hope it helps.

Also, here is a low-cost way to add a lot of safety into your older Cherokee. Have a mechanic put a pull-to-reset type of circuit breaker on your alternator field circuit. In the event of night or day IFR alternator failure, the pilot needs only to pull this breaker to conserve his battery. Many pilots do not realize that when an alternator fails it still uses current. By turning this breaker off a pilot need not use his valuable battery power to feed a dead alternator.

Also, in the event of uncontrolled regulator failwe (i.e., overvoltage), it is the only way we pilots without a split master switch can turn off our alternator and still keep our battery power.

Lubricate Rudder Linkages
by Pete J. Anzalone

I would like to provide a bit of information about a problem I had concerning rudder stiffness on the ground as well as in the air.

I could not steer left or right due to stiffness in the linkage under the pedal. I also had to stand on the rudder pedal to bring the nose to the left

I first explained it to the mechanic at Tampa Bay Executive. Ed told me that every so often you have to spray a Teflon lubricant on all the linkages. I did so and corrected my problem. Now I can step instead of stand on the rudder pedal.

Ed also suggested I lube the elevator linkage as well, but watch out for those early flares with the slick linkage.

Inspect Induction System
by H. M. House

I want to caution fellow Cherokee owners to remove and inspect induction tubes for cracks around the flange area which will result in a lean mixture and leaking fuel.

I replaced intake gaskets on my PA-28-180 at 1,700 hours one rainy day. At that time one intake tube had a crack at the flange area at least one inch long. Unable to purchase a replacement, I silver-soldered the crack and reinstalled.

Recently, while replacing a valve cover gasket, another induction tube had fuel stains on it. After removal, it also had a crack in the flange area.

I would strongly recommend removal and inspection of the tubes at annual time and visual inspection for fuel stains at oil change and at plug cleaning time. The first tube was cracked on the far side, the second in plain view. Check carefully and remove any suspected tubes.

Vents Now Made of Metal
by Lloyd P. LaPlant

Wanting to obtain some repair parts for my vent system I finally located themanufacturer of the original plastic vents. They informed me that these vents have not been manufactured for many years.

The vents have been superseded by an aluminum product. P/N 2368-503. The original P/N was 2215.

The company is WEMAC division of Puritan-Bennett Aero Systems, 18475 Pacific St., Fountain Valley, CA 92078 (714-962-8874).

Starter Solves Bump Start
by Darrell M. Reddix

I own a 1966 Cherokee 140. I bought my toy in March and battled the famous bump start until November. I tried a new battery, etc., all with no results.

Then my mechanic offered to do an experiment.

He replaced the starter and ring gear: starter P/N 4222 and ring gear P/N 72566.

This solved the problem I was having with my plane. Now I have no more bump start and crank with the "big boys."

The total cost was less than $400 for parts and labor.

Simple Repair to Starter System

When Tom Gregg's 140 failed to start without "bumping" the starter switch, he tore into the starter system to find out why. He found the cable from the solenoid to the starter to be completely corroded - it turned to white powder when you moved it.

So lie replaced this with a copper cable. Now, he says, it turns over fast enough to taxi the plane.

He advised that anyone making a change here carefully clean the solenoid connections. The solenoid has three types of metal inside and suffers from electrolysis. Also, when installing a starter cable, do not overtighten the cable on the starter. You must be sure not to twist the lug which will damage the internal connection and result in expensive starter repairs.

Using Oil Analysis

By Terry Lee Rogers

Oil is the lifeblood of your engine. You undoubtedly knew this before - this is no revelation. But yon may not have paid much attention to what this sentence implies.

For oil, just like blood in the human body, can help you keep tabs on your engine's condition the same way that blood tests can help determine human illnesses and weaknesses.

Oil analysis is a tool which many pilots use to good advantage in keeping their engines healthy and to assuage their own peace of mind - especially when flying near or above the TBO on their engine. At such times oil analysis is indispensable for safe flying.

So let's take a look at what oil analysis is all about and what it can do for you. First of all, there are two types of oil analysis - visual and spectrographic.

Visual analysis is important because a spectrographic analysis may miss a lot of what is going on in your engine. A spectrographic analysis, for example, cannot detect crankcase cracks, a bad chrome job in the jugs (where chrome flakes off in big pieces) and other defects where big chunks are the result. To detect these problems you need a visual analysis.

The visual analysis is done by the pilot or mechanic. It involves looking for metal particles in or deposited by your oil. We are talking about metal which is large enough to be seen and felt. When you find an accumulation of this type of metal, it may mean that complete breakdown is just around the comer.

These particles, macroscopic particles if you please, will collect in certain places in your engine. In the rocker covers, for example, you may find cam spalling debris.

All sorts of debris may be found in the oil system pressure or suction screens. The suction screen is found at the oil sump and screens debris before it is "sucked into the oil pump. The pressure screen is found in the oil line downwind from the oil pump. They vary in location on different engine models, but both should be checked during the annual inspection for metal particles.

The greatest collection point of all in your engine for both metal particles and dirt in general is your oil sump. The dirt isremovedwhen you make yourregular oil changes.

When making these changes, yon can use a magnet in a funnel to help remove and examine iron particles which are in the oil.

But the most logical place to find metal particles is in your oil filter. If you are simply throwing away your oil filter when you change oil, you are not doing the diagnosis which is necessary to spot engine problems before they become failed engines. You need to open up that can and examine the filter element inside.

To do this you will need an opener. (A hacksaw is not a good idea - if you are looking for metal filings, the hacksaw is a good way to insure that you find them.) Cutters are available at various price ranges - check with the mail-order aviation supply houses.

To properly check your filter use your tool to open the can exposing the internal filter element. Cut out the paper element which you thenunfold and, using your fingers, search for dirt or metal debris in the pleats of the filter. You are looking for metallic debris - the hard carbon "coffee grounds" are normal.

How much is too much. **A** rule of thumb says ground the plane for further investigation if you find ametal particle larger than a broken pencil lead or if you find more than a quarter teaspoon of metal shavings.

In either case send samples to the engine manufacturer for analysis. It is not normal for large quantities of visible metal to accumulate in the engine and you need to know where it is coming from.

Spectrographic Analysis

But visible metal is only part of the problem. Abnormal wear in an engine can result in metal particles which remain in suspension in the oil and which are too small to be seen or felt. But these particles will give you a good idea as to how the wear in your engine is progressing.

To determine what microscopic metal particles are in your oil you need to use an oil analysis laboratory.

Oil analysis is a valuable tool. It was developed in the 1940s by the railroads to detect wear in diesel locomo-

tives. The technique was picked up by the military and trucking industries and finally spread to general aviation.

Oil analysis is controversial among some mechanics, but the controversy does not stem from any lack i l the technique. Rather, it comes from an attitude on the part of some aircraft owners that oil analysis is a cure-all for everything.

Oil analysis, however, is only one of a nwnber of tools which can help detect developing problems in engines. Regular compression checks, horescopic inspection of cylinders, and other investigative methods are absolutely necessary in determining the condition of an engine.

Spectrographic oil analysis, however, can help. Let's see how it works.

Different metals, found in engine oil, come from different places in your engine. Depending upon the concentration of substances, it is possible to get an idea as to whether any part is wearing in an abnormal manner. Some items, found in engine oil, and the places they originate, are:

Aluminum	Pistons, Bearings
Chromium	Rings, Cylinders
Copper	Bearings
Iron	Rings, Crank, Cam
Lead	Gasoline
Magnesium	Rings
Nickel	Rings, Bearings
Silicon	Dirt
Silver	Bearings
Tin	Bearings

Obviously, if you know that a particular substance has increased inordinately at the time of the last oil analysis, you may have a particular problem which can be (at least partially) identified.

For example, anincrease in magnesium would lead you to the rings. Nickel to either rings or bearings (you could perhaps narrow it down more specifically by checking to see whether silver or tin or, perhaps, magnesium increased at the same time.)

Performing the Exam

The first step in the oil analysis program is collecting a sample. This sounds easy, but it is not as simple to get a good sample as you might think.

First of all, the engine oil should he warm when it is collected - the engine should have been recently run. Also, it must be collected in midstream. The oil at the beginning of the stream and at the end can be expected to contain nonrepresentative particles which will contaminate the sample. The sample should contain only oil with suspended metal particles no larger than five microns in diameter (about 40 millionths of an inch). This is what will be tested by the lab.

The lab that you select will supply you with a testing kit and instructions for making your collection. Once a sample is collected, it should be mailed to the laboratory immediately. If the sample is allowed to sit, aproblem called "agglomeration" results in which particles tend to cling together. This will cause a faulty analysis.

Once the sample is received by the laboratory, it is tested on a device known as an emission spectrometer. The results show contaminants in the oil in parts per million.

There are a few problems with the procedure. First, any contamination of the sample will show up in the tests. Any dirt in the collecting cup, oils or dirt from fingers, or anything which drips into the sample from outside the crankcase will contaminate the sample and provide false readings.

Also, tests have shown that identical samples, sent to different laboratories, will yield widely different results. One lab may show that aluminum content of your oil is 8 ppm. Another lab may show that the same oil has aluminum content of 25 ppm - more than three times as much.

Which laboratory is correct? Hard to tell.

What this means to you is that there is no raw passing score for your oil. You simply get the results and then compare them to your next oil sample. What you are looking for is, generally, not a raw score, hut a major change in proportion of material from one sample to another.

Luckily, similar testing has shown that the same laboratory, when testing identical samples in "blind" tests, were generally able to maintain consistent results among samples.

What this means to you is that you should pick one lab -and then stick with it during subsequent testing. If you switch from lab to lab each time you have a test performed you will end up with a lot of meaningless figures.

Among the contaminants tested for are lead and silicone. A bit more needs to be said about each of these substances.

Silicone is the principal ingredient of dirt - sand, if you will. An increase in silicone indicates that the air filter is not doing its job and this damaging substance is getting into the engine. Or it may show that an alternate air door or carburetor heat door is stuck part way open. Excess silicone in the engine acts as an abrasive and accelerates engine wear.

Lead, on the other hand, comes almost exclusively from the by-products of gasoline burning.

Excess lead may mean either that you are not leaning your engine properly (check to see how your spark plugs are doing - the valve guides may he contaminated by lead, too.) Or it may mean that excess blowby is occurring, perhaps because of a stuck ring(s).

Some laboratories, when testing oil, will note unusually high occurrence of some potentially devastating contaminants and will flag your test results to bring them to your attention. Some labs will even get on the phone to warn you to ground the plane if the results appear to warrant.

But unless certain materials are present to the extent that the results are completely off the scale, a one-shot analysis does not have that much value. The value occurs over a period of time as one analysis is compared to the past

ones. And the results need to be verified and cross-checked by your mechanic using other tools, such as the compression check and borescope.

So, for a quick summary, how valuable is microscopic oil analysis? It is probably well worth the money so long as tlie aircraft owner realizes tlie limitations and uses it as a tool along side of the conventional testing and analysis techniques used to check the condition of an engine.

Where are They?

A final question: wliere can you get your oil analyzed? You might want to try one of the following:

Spectrum Laboratories, Inc.
524 Pelham Avenue
Piscataway, NJ 08854
201-752-1400.

Cleveland Tech Center
18419 Euclid Ave.
Cleveland, OH 44112
216-383-8200

Spectro
P O Box 1227
Arlington, TX 76004
817-274-5754

Juice Jug Mends Fairings

By Ralph D. Loewinger

For those members who wish to repair their original plastic fairings and tips, save those Tropicana frozen juice containers (the plastic type.)

The original Piper plastic does not do very well with fiberglass repairs, but PVC pipe cement and a strip of Tropicana container works great. I am sure there are other plastics that melt onto fairings, but Tropicana is tops.

Installing Newer Control Wheels

Members ask from time to time about installing newer-style control wheels in older model Clierokees. One member recently called in to remind everyone that the procedure is specified in Service Letter 527D.

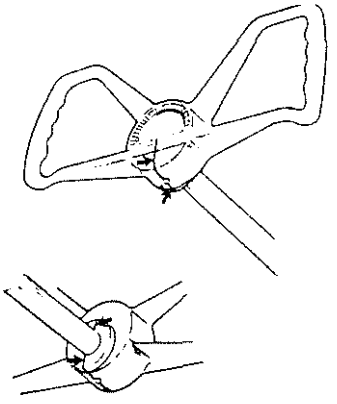

Cherokees built before 1978 were subject to a repetitive requirement to inspect the control wheels for cracks each 100 hours. Cracks were found on a number of control wheels where they connected with the shaft.

Service Letter 527D eliminated the periodic inspection when ranis honi type control wheels were installed. The new control wheels came in two flavors: 78729-02V for aircraft with 314 inch shafts and 79276-00V for aircraft with 1 1/4 inch shafts.

These wheels were to he installed if cracks were found in the older style wheels or if the owner desired to eliminate the requirement for repetitive inspections.

The cost of the replacement is not cheap, however. Piper lists the 78729-02V wheel at $193 each (1989).

Second Avionics Master

I purchased N75078 last August and noticed two master avionics switches, one marked "Aux Master."

I asked the previous owner about this and was informed tlie "Aux" switch was wired in parallel with the master. If the master failed, the aux switch could be closed.

It seems as if a switch failure had taken place before and this was a backup cure.

Concerned About Propeller Overhaul

Bill Nemeth expressed concern about tlie repetitive AD on his Arrow's propeller. His answer:

To get the complete scoop on how this AD affects your plane I talked with Mike Kelsey at New England Propeller Service. Here is what lie said.

AD 77-12-06must he complied with on your plane each 2,000 hours or each five years, whichever comes first. When the AD was first promulgated it required compliance each 1,500 hours, hut field reports indicated that the longer interval was pemiissible.

Compliance with tlie AD requires the propeller to be disassembled with the blades and hearings being removed. The blade retention area must then be dye-checked for cracks and corrosion.

Overhaul is not mandated, but highly recommended at least every other time. The heavy Hartzell blades put a strain on the bearings and both the bearings and seals should he replaced regularly during an overhaul procedure.

Also, there is a limit to the number of times overhaul is permitted. When the blades me reworked due to corrosion, some metal is removed and eventually tlie blade dimensions are too far out of spec to allow the propeller to return to service. Then you need to purchase new blades.

Cost of complying with the AD or overhauling the blades varies, but runs about $625 if you just want to comply with the AD to about $1,100 if you want to completely overhaul the propeller.

One other course of action would be to replace the propeller. New England now has a certification to install a three-blade McCauley on the Arrow 200 and is awaiting approval for installation on the 180 h o w . Cost is not cheap - it runs about $5,000, but it does eliminate the periodic inspection and overhaul. It is quieter and it provides improved climb performance.

Frustrated Over Bleeding Brakes

J. E. Harris complained that he was finding it nearly impossible to bleed his Cherokee brake system. The answer:

Unfortunately, all Cherokees have areputation of being a bear to bleed brakes on, but the procedure can be done with patience and some planning.

It does take time, however, to get all the bubbles out. And possibly the biggest problem involves mechanics forgetting that the hand brake, too, can introduce bubbles into the system. The hand brake needs to be activated at least several times during the bleeding process.

One method, suggested by a CPA member, which seems to work, involves bleeding the brakes into a long section of clear brake tubing. With this method both brakes are bled simultaneously and the parking brake is activated numerous times as part of the bleeding process.

Attach about 15-foot sections to each brake bleeder valve and pump fluid with both the foot and hand brakes. Have an assistant make sure the fluid in the reservoir remains full.

Pump until no air bubbles rise in either side. The members suggested returning the lines to the reservoir, although it is not good practice to reuse brake fluid. But use your own judgment.

Electric Fuel Pump Price

Gene P. Durieux complained about the high price of new electric fuel pumps. He wanted a possible rebuilder. His answer:

1 did find one shop which will rebuild Piper electric fuel pumps. It is B&S Aircraft Parts and Accessories, 1414 S. Mosley, Wichita, KS 67211. Their toll-free number is (800) 835-2961

They charge approximately $300 to rebuild your pump along witb a new motor. They may be able to install anew motor on the old pump at considerably less than that.

Of course, there will be a short down time while they rebuild, but perhaps not as long as it would take to receive a new pump.

Created Battery Pack

By Mark Veerman

I recently made an emergency battery box that can be plugged into the cigarette adaptor to provide emergency power in case of electrical failure.

This recently occurred to me last November at night in IFR conditions and I vowed to he better prepared should it happen again. I have already purchased an ICOM A-20 handheld radio, but this does not help much on an ILS approach.

I recommend this for either VFR or IFR pilots, especially in today's airspace environment with the requirements for transponder and two-way communication.

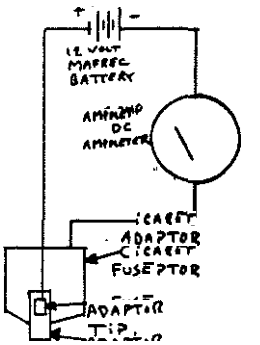

The battery is a sealed 12-volt lead-calcium battery (i.e., no electrolyte needed) providing six amp-hours of power. This battery can be purchased from Tower Hobbies for about $28 (800-637-4989). Order Mafrec 12-volt battery, No. HCAP0775.

You can put this in a small tackle or tool box. I connected this to an amp-meter I had around the house to tell me how much amperage the electrical units were using (not required).

You can then purchase from Radio Shack a cigarette adaptor to connect the battery and amp-meter (see diagram). I suggest buying the adaptor with the fuses in the tip, as this is a much better unit and also serves as a safety device.

Attach the adaptor unit so the wire remains inside the box, with the adaptor sticking out one end, but so that it will allow the connecting wire to be pulled out to connect to the cigarette lighter socket.

Whenusing emergency battery power, pull the generator and field circuit breakers which you no longer need. Also, turn off any unnecessary electrical units and always all the lights.

Depending on your aircraft configuration, you should have power for at least one hour. Below is the amperage for the units in our aircraft:

Unit	Amp Load
Baseload	1.5 amps
Turn Coordinator	0.25
AT-50A Xponder	0.75
King 8002 Loran	0.5
King 170B (talk)	0.25 (1.75)
King 170B Nav	.25
King 145 Navcom	1.0
KR-86 ADF	0.75
Fuel Pump	0.25

I also suggest you use a 500 MAH charger when you charge it, as it gives a full charge without risk of overheating or damage.

When finished you have a battery box that weighs about 5.5 pounds and fits nicely under the front passenger seat. I have tested the battery pack for an hour on the ground with all the units listed above on, and I still had power remaining.

Shoulder Harness Tough to Install

By David A. Folker

During the past year a significant service bulletin was issued by Piper recommending the installation of shoulder harness assemblies. The bulletin included a reference chart for models, serial numbers, etc. (SB 896, Ed.)

The shoulder harness assembly kit, complete for the PA-28-140, was $309 (1989), including shipping. The kit contains almost all necessary hardware along with replacement lap and shoulder harness belt assemblies.

Before purchasing this kit, I talked with the Piper technical service department to get a handle on installation difficulties and costs. 1 was told at the time that the greatest difficulties included removal of the headliner, several bulk head rivets, and the placement of approximately 12 rivet pins.

During my recent annual inspection I had my A&P install the harness assemblies. I was present during most of the associated work with the bottom line being 16 hours labor the harness installation alone. In my opinion, the work time was legitimate and required a great deal of careful tool manipulation. There was also some metal fabrication required.

When the job was completed, my A&P indicated he hoped it would be a long time before he had to do this again. The finished job is first rate, the harnesses are very effective, and they are stowed very neatly. As to whether or not the job is worth more than the $700 cost is for someone else to decide.

The point here is for those who are concerned or have an interest in this installation - he prepared for a long, complex labor application along with a small amount of external refinancing.

Automatic Wastegate for Turbo Cherokees

A Washington firm has introduced a new automatic wastegate to replace the fixed-wastegate system in turbocharged Arrows and Dakotas.

The Merlyn "Black Magic Control" is designed specifically for the TSIO-360 series engines used in these planes. The compact unit weighs 21 pounds.

The company is offering the "standard version. with a cast housing, for $1,595 while also offering a unit with a jet-black anodized finish for $1,895.

For more infomiation contact Merlyn Products Inc., West 7500 Park Drive, Spokane, WA99204.800-828-7500.

Arrow Propeller Mod Now Available

As Arrow owners are aware, Hartzell propellers are subject to arepetitive ***AD*** which requires the propeller to be rebuilt each 2,000 hours or five years, whichever comes first. A major nuisance and a big-bucks expense.

Well, some Arrows will avoid the AD and get a little extra "sex appeal" when they are equipped with a three-blade McCauley propeller.

The modification is now available for Arrow 180 and 200 models from U. S. Propeller Service of Connecticut, Inc. According to the company, the three-blade propeller provides notably better thrust, especially in takeoff and climb.

In addition to eliminating the ***AD*** hassle, the company claims lower noise level and removal of the red arc restriction on the tachometer. Also the company claims lower cabin noise level.

For more information concerning the Arrowhead Conversion, contact the McCauley Accessory Division, P O Box 430, Vandalia, OH 45377 (513) 890-5246 or U. S. Propeller Service, P O Box 415, East Haddam, CT 06423 (800) 233-2586.

Conversion Source: 140-160 hp Engine

While I was on the phone to New England Propeller Service, Chris Sienko casually remarked that the firm can convert the Cherokee 140 engine to 160 horsepower. The new engine provides more power with a re-pitched 74DM60 propeller and the engine now uses 100 octane fuel.

The installation requires the change be recorded on a337 form, that the tachometer be red-lined to 2575 rpm and that the fuel tanks be marked "100 Octane Minimum."

Also revised are the flight manual and the weight-and-balance forms. The cowl skirt is modified to accommodate the new engine.

New England Propeller sells the paperwork on the 337 modification for $250. The change would then be made by your A&P or IA during an overhaul or top overhaul of your engine.

The engine is converted from a 0-320-E2A (wide cylinder flange) engine to a 0-320-D2A. Although rated at 160 hp, this engine is limited by the 337 to 155 hp by placarding the tachometer at 2.575 rpm. However. takeoff. climb and cruise performance is improved and the engine is enabled to bum 100 octane fuel without the lead problems of the original.

For more information contact New England Propeller Service (the address is the same as U. S. Propeller service in the previous article.)

Loud Buzz Indicates Alternator Problem

By Richard Goosman

Regarding the problem with the on and off electri-

cal system, the answer is quite simple as it happened to me as well.

The cause turned out to be a bad diode in the alternator which gave single phase output instead of three phase. With too much load tlie voltage would droop and, with too little, the overvoltage relay would kill the system until recycled.

The deadgiveaway for this condition is a loud buzz in the avionics (use your least favorite radio) when the master switch is turned to alternator only and the battery is no longer able to filter out the electrical spikes. Replace the alternator and all will be well

Converting the PA-32 to Club Seating

A question whicli comes up frequently concenis converting a PA-32 with straight-ahead seating to tlie popular club seating configuration.

I checked with Mike Roney of Mike's Upholstery at North Omaha Airport, Omaha, Nebraska, to get a few tips.

Mike specializes in aircraft interiors and conversions for Bonanzas aid other aircraft, He recently did a club seating conversion for a Cherokee Six. However, it wasn't easy.

According to Mike, the only way to go is either to purchase tlie complete interior from a salvage yard, or to buy new interior components from Piper. There is no good shortcut method.

The basic installation is simple. The problem with creating your own solution is the seat belt attachments at the main spar. The FAA will not issue a field approval unless they see valid engineering tests to show that the anchors are capable of withstanding a 1,500 pound dynamic load.

Some shops are willing to put an interior in for you and may quote a nice price, but they will not make aly representations that the paperwork will be approved by the FAA. Do not get involved in this situation. Otherwise, at the next (or some future) annual, you will probably find your plane grounded until the improvised interior is removed and an approved interior iustalled.

Don Stretch, president of Airtex Products, also has had some experience with the conversion, but does not recommend it. He said:

"First of all it is a very long downtime in making the conversion. You will have to replace the middle seats with the special reinforced backrests and restructure the bottom frame.

"The location of the safety belts has to be changed and new front attachment points have to be mounted aft of the secondary spar. I have heard of prices as high as $2,000 for this conversion.

"Also, keep in mind that when you go to club seating the aft facing seats do not recline - a poor comfort feature.

"So, to sum it up, I feel the modification is quite costly and not that productive in comfort."

Interior Tips

by Kent Shaw

Another way to make your interior sparkle is to replace all of your interior screws (originally nickel plated) with stainless steel. Although several of the stainless steel companies offer kits for your exterior, none of them provide kits for the interior.

I requested all of my interior parts piecemeal from Gartmann Stainless, P O Box 10058, Delran, NJ 08075.

They always sent my order promptly and at reasonable prices. I usually just mailed them one of my old screws and asked them to "Send me six of these."

Still another improvement is to remove all of your interior plastic parts and repaint them with a vinyl paint. You can get your local automotive paint dealer to mix some to match your current interior color or you can do like I did and go to your local hardware store.

I used a paint made by Mar-Hyde. It comes in an aerosol can just like a regular paint (I was told it is actually a dye.) The results, with ordinary care, will be superb. One friend of mine even asked if I had bought all new plastic parts from Piper!

Now that you have removed all of your placards to repaint your plastic, why not replace them with engraved plastic from your office supply store. The cost will be about the sane as Piper would charge for replacements, but will look so much better! Just give them the dimensions and the exact wording and use rubber cement to attach.

Lycoming Offers Troubleshooting School

Textron-Lycoming offers a four-day, Monday through Thursday, troubleshooting course for aircraft mechanics, but tbe course is not limited solely to mechanics. According to those who have attended, the school is first-rate and the instructor, Don Stahl, is superb.

The plant is in the scenic mountains of Pennsylvania with good places to eat and reasonable motel rates. The course is free, but each person is responsible for his own lodging.

Transportation between motels and the school is provided.

For more information contact Bob Ohnmeiss at Textron Lycoming, 652 Oliver Street, Williamsport, PA 17701. (717) 327-7127.

Cowling Change, Seats and Flap Problem

I have a few questions to ask.

What do you have to do to install alater-model two-piece cowling on my 1969 Cherokee 140? The bolt pattern around the cowling is the same so it will physically fit on the airplane, but it looks as though you must change the engine baffling and oil cooler mounts because the newer

cowling engine air intakes are up higher than the older style. Also, what about the paperwork involved?

Also, I would like to replace the low-back front seats with a later pair of high-back seats when I reupholster my plane. Is there a later model style of seats that will slip right in? What about a pair from a Warrior or Cruiser?

And I would appreciate it if anyone out there could give me input on the Horton STOL kit. Are the performance gains anywhere close to what they advertise?

Finally, I ran into one problem with the manual flaps on my Cherokee I would like to pass along.

While practicing short field takeoffs with the flaps set to 25 degrees just after rotation there was a sudden POW as the flap bar slammed against the floor and the plane came back to the ruuway. I was glad it wasn't a real short field takeoff.

What had happened was the pin that holds the flaps locked in their groves on the mounting plate broke in half at the center where there is a hole for the cable.

While installing a new pin I found that the bolt that the flap bar mounts to was worn 75 percent through and would have given out soon. The bracket itself was cracked in three of the four holes where it attaches to the floor. The time on the airplane is 3,500 hours.

David Dixon
Phoenix, AZ 85021

Dear Dave,

Thanks for the information about the flaps. The Piper system is pretty foolproof, but it does need some attention aid, as service difficulty reports indicate, it does tend to get ignored.

The two-piece cowling would not be too difficult to install. Any mechanic could handle the baffling and mounting problems easily enough. The real problem, however, would be the paperwork.

The FAA would require data to show that the cowling change was sound. Although the cowling itself is not a structural pat, it is easy to see what a hazard would be if it let loose in flight.

My guess is that FAA requirements for engineering data would make the swap impractical, but you might check with your local FAA district office.

The seats, too, are no problem, and many owners of 140's have replaced them with new seats. The only problems are changing of weight-and-balance data and, of course, FAA paperwork.

Don Stretch, of Airtex Products, however, warns that the seats on PA-32 models are offset and will not fit PA-28s. Also, later model Cherokees came with two kinds of seats -the ones used up to about 1970 had reclining seat backs, while later models are fully articulating, using pistons to change the angle of the seat.

Many people moving up to later-model seats prefer the reclining seats to the fully articulating models. Be sure to get the ones you prefer.

Bleeding Brake Tip

by Michael Whittlesey

I own a 1966 140 that has a manual brake only. I have done a lot of work on the brake system during the twenty-one years I have owned N7520R, including master cylinder replacement.

The method I use is to cotmect a pump-type oil can to the brake bleeder with a piece of plastic tubing. With the pump can full of brake fluid I reverse bleed the system by forcing brake fluid backward through it with the pump.

The fluid accumulates in the brake fluid reservoir along with the air. For my airplane's system this method requires only a few minutes and can easily be done by one person and works every time. It is sure nice to have gravity on your side for a change!

One additional note: I use this pump-type can ONLY for aircraft brake fluid and never for anything else (like oil) to avoid contamination problems.

Source of 180 C/S Prop Conversion

Michael Lopez, who owns a Cherokee 180 with a constant-speed prop, directed us to the STC holder, Hutchinson Aircraft, of Borger, Texas.

They have the STC to convert the 180 to a constant-speed Hartzell propeller (but unfortunately, nothing for the Archer). They have not made a modification in the last couple of years. John Sewell said he did not have exact figures, but that a conversion would cost approximately $9,000.

The propeller is subject to the Hartzell recurring AD, just like the Arrow, and placards limit the propeller rpm to 2,700 rpm and warn against continuous operation in the 2,000 to 2,350 rpm range.

Unfortunately, the "manual" which comes with the STC is skimpy: it informs pilots to check for pitch change on preflight runup, says to use high pitch for takeoffs and landings, and states that the performance "meets or exceeds" that shown in the basic aircraft flight manual.

The Hartzell manual which also comes with the STC does not provide much specific information, covering several models of propeller. Michael Lopez says it basically tells you that you have a non-feathering model propeller, but not very much more.

Also, although the propeller can be installed on most 180s, it will not fit all. Later model 180s came with a solid crankshaft and cannot be fitted. To check you need to pull the spinner and see if there is a freeze plug at the end of the crank. If so, it is hollow and will accept a constant-speed propeller.

So, if you have been waiting to find a source for a constant-speed propeller for your 180, contact Hutchinson Aircraft, Hutchinson County Airport, Borger, Texas 79009 (806) 274-6781.

Multigrade Oil; Exhaust Leaks

by Torello Tacchi

Last year I switched to Shell multigrade AV oil and, just as an engineer told me 20 years ago, it is the way to fly. Starting is much easier (I still have aluminum cables), oil temperature is cooler and more consistent.

The real kicker comes when you add the extra oil for long hauls. At the end of last year I flew to Tallahassee and had to turn hack because of foul weather. The total flight time was two and a half hours and it used one quart of oil - it had not yet reached the six quart mark. On my IFR cross country this year I also went to Tallahassee for the flight time of 4.3 hours and guess what - the oil level is the same. It finally lost that extra quart at 14 hours.

Multigrade doesn't work some say. It is unfortuuate that aircraft engine technology has not advanced at the same rate as lubricants.

On another subject, at the last inspection we noticed a small exhaust leak on the #4 cylinder. Since we had to remove the muffler for closer inspection (remember, I had broken baffles on the last one), we decided to eliminate the problem once and for all. Blow-proofgaskets help, but they still manage to seep.

After hours of head scratching we found that the entire exhaust system is hung by four hare minimum exhaust flanges. Add to that the fact that two of the pipes are a slip fit to allow for expansion and flexing , so now you really have only two flanges doing the actual holding. As time goes by, the flanges bend and, oops, leak.

After some research I found that some Piper models have extra muffler supports, evidently to prevent this problem. We decided to experiment and add such a support, though temporary, and some 25 hours later, no sign of leaks. In addition, a lot of engine compartment vibration is gone since the exhaust system cannot resonate to the tune of engine vibes. No more bending flanges.

I hope to make this a more permanent installation later on. I also found that Genuine Parts carries those extra long brass exhaust nuts in both coarse and SAE threads. They are designated as an exhaust nut and, in most cases, must be ordered.

Carburetor Problem Solved

by John E. Washburn

Last year I had a problem with my carburetor The engine ran on after a mixture-full-lean shut off, unless I opened the throttle.

I had replaced the float, needle and seat valve on the throttle shaft, all of which needed replacement, but it still ran on.

Finally a solution (Ta-Daaah): I replaced the fuel mixture metering valve, the device which is operated when the mixture control knob is moved, and everything is back as it should be. The valve had apparently worn so as to allow some gasoline to leak past it even at full lean.

Shop Around on Propeller AD

Thanks for printing my letter concerning the propeller AD (Arrow); I subsequently had the AD done at a total cost of $426.15 by Redlands Prop Service. However, I received the letter below from another member and I believe everyone should be aware of the contents. Beware of rip-offs.

Bill Nemeth
Vista, CA 92083

"Dear Bill,

"I also have an Arrow 180 and have had the AD note done two times. The first time the blades were replaced. Then, later, the two blades were checked by Hartzell and were good. The AD note cost me $1,500.

"The second time the AD note was done the hub was replaced and it cost me $1,800. The prop has cost me more than anything on the airplane.

"I know of another person who sent his propeller to Hartzell and let them do the AD. It cost $275.

"If I were you, the next time I had the AD note done I would let Hartzell do it. It costs less and they will not replace parts that should not be replaced."

Name Withheld

Another Source for Landing Light

Tired of spending $20 for a landing light bulb? Well, one enterprising reader in a farm area, suggests contacting your local farm store.

It seems the 4509 aviation bulb is also available for about $6 from many farm outlet stores to fit tractors. Both are 13-volt bulbs and both will fit aircraft or tractors, but the tractor bulb is a lot less.

Also, many A&P mechanics, especially where bulb life is ridiculously short, have for years advocated mounting the bulb with a vertical orientation to the filament. This supposedly reduces vibration and drastically increases bulb life.

Lordy, Lordy Discount Mounts

by Steve Decker

I bought my Cherokee 140 almost two years ago. I noticed the Lord mounts on the Dynafocal engine mount had radial cracks in the rubber "donuts."

Replacement Lord mounts are very expensive, listing for between $350 and $400 a set of four in Trade-a-Plane (1989). Heaven only knows what they would cost at retail locally.

About a year ago I saw them on sale in Wag Aero and ordered a set at substantial savings over the TAP prices. Recently, I got around to having my friendly A&P install them and what a difference they made. The engine runs as smooth as silk at all rpms. This is the first Piper 1 have ever owned and I simply assumed it did not like t o m at about

2,300 rpm without vibration. Sort of like some engine-prop combinations used to be placarded against certain rpm settings.

POM readers with cracked Lord mounts or vibration problems might have the same good luck I had.

Engine Porting

by A. O. (Jim) Thornburgh

We have a 1974 Warrior that we have had since it was almost new. Last year, after 2,000 hours, we had the engine overhauled by Beaver Aviation of Juneau, Wisconsin. The cylinders were re-ported and balanced by High Performance Engines. This boosted the horsepower about four horsepower per cylinder.

The added 16 horses have really made a big difference. It increased the cruise about 10 knots and even on really hot days we can climb at 800 to 1,000 feet per minute.

(Ed note: High Performance Aircraft engines and Components is located at P O Box 1242, Mena AR 71953. Telephone 501-349-6026).

Vent Knob Fix; Heavy Wing Plane

I have owned a 64 PA-28-235 and needed the knobs to open the air vents. After checking all over I finally went to Radio Shack and found a set of knobs used in radio building. They were smaller in size (same size shaft), hut had a knurled surface which made them easier to turn than the originals. They cost me $2.98 apiece and have worked fine. I hope this helps out.

Now it is my turn for help. My 235 has a bad habit of going into a tight left bank whenever I let go of the controls during straight and level flight. The ailerons are equal when the control wheel is straight (when on the ground), but once airborne I must keep a constant right wheel pressure to maintain straight and level flight. It is more pronounced when I have full fuel on board (42 gallons each side).

I am looking for anyone that has had this problem and possible solutions. I am considering the total re-rigging of the aircraft, but have held off pending any suggestion. Oh, I have checked the tlaps for possible hanging down, but that does not exist. Suggestions are greatly welcome.

J. C. Harris
Anchorage, AK 99518

Dear Mr. Harris,

It sounds like re-rigzing your plane may be in order.

Unfortunately. you cannot check rig by merely eyeballing the flaps and ailerons. If either is off a little bit, it will make a big difference in the handling.

You can, however. make a preliminary check yourself using the methods described in sections 5-12 and 5-44 of the maintenance manual. Both require construction of a homemade jig, but the instructions and dimensions are given in the manual.

Some Cures For Sticking Valves

By Bob Shotwell

A few years back we were having quite a few problems in my Warrior with valves sticking and plugs that would need frequent cleaning.

At that time a Lycoming engineer related, totally off the record, that mixing 1 oz. of TCP and 3 oz. of Mystery Oil per 10 gallons of fuel has worked for others. He couldn't suggest it - he just wanted to pass on the info for what it was worth.

For the past few years we have been adding the above with each refueling. The plugs have run much cleaner and there has been no further need for valve reaming.

Well, the plane went in for an annual at the beginning of November. The mechanic found a cracked cylinder. Unfortunately, these things do happen and that cylinder had been on the engine since top overhaul 1,000 hours ago.

Before removing the cylinder, he suggested that valves would probably have to be replaced, also. Prior to working in Northampton, he had worked for a well-respected engine overhauler. The mechanic told me that with only 300 hours on the valves, they will frequently have to be rejected, not because they aren't good, but because if the mechanic sees any pitting or wear he has to reject it. Oh well, more money. Nobody ever suggested that owning an aircraft was cheap.

Imagine my surprise when he told me the valves were acceptable. He couldn't believe they had 1,000 hours wear on them - they looked too good. I told him of the TCP/ Mystery Oil added to the fuel. He had heard of it, but had never seen any after results.

There is no way to know for certain that the "juice" saved the valves, but I am convinced and so is the mechanic. Like the Lycoming engineer before me, I am not suggesting that anybody do likewise - I am only passing it on for what it is worth.

Half-Baked Yoke May Be Needed

We have, in past issues, recommended a source for refinishing Piper Yokes. That source is Americoat Corp., 3715 US Highway 98 South, Lakeland, FL 33801. Telephone (813) 667-1035.

However, there is one caveat: they will not accept a yoke for refinishing with the shaft still installed.

Piper attaches the yoke to the shaft using Lock-Tite, which causes the unit to appear to he almost one piece.

However, the shaft can be removed. To remove it place the entire unit in your home oven and heat it until the shaft loosens.

Obviously, be careful not to bum yourself on the heated yoke assembly.

Incidentally, in case anyone knows of a Piper Aztec with no control wheels, the firm apparently recently re-

ceived a set of white wheels for refinishing. Unfortunately, there was no return-address with the package.

A Quick Drain Warning

By Torello Tachi

I received my private ticket in January, 1979, in Chicago. It was eight degrees below on my check ride. The following week at 12 below zero, a friend who owned a brand C 150 and I flew to Sanger Field some 60 miles south of Waukegan. Bob arrived an hour ahead of me to warm up the plane and get it ready for our little jaunt.

When I arrived he was still shoveling snow. We finished shoveling and some 45 minutes later we were airborne. We decided to fly along the coast of Lake Michigan (icebound) in order to avoid air traffic from Glenview and O'Hare.

There we were trying to climb out with outside temperature now -20 degrees. Bob asked me to give it more power, but I already had it pushed through the dash. Then, we lost power.

I will spare the details, but suffice it to say I made aperfect dead-stick landing in tlie snow-covered sand dunes at Illinois Beach State Park. The cold weather enabled us to glide a long way from 2,000 feet. The plane was in good shape except for a broken nose gear.

After the snow had settled we went back to find out why the engine had quit. There was no oil in the crankcase, although when we checked it during preflight it had seven quarts.

Bob, being an excellent A&P, caught a glimpse of the quick release drain valve aid, you guessed it, it was open.

It seems that Cessna utilized the valve oil many of its models and, in addition, they added a six-inch piece of hose to the valve to prevent oil from draining all over the cowl. With the cold weather, the liose was hard as a rock and, with vibration, it popped the drain open quickly drained the oil from the sump.

The standard Curtis valve is perhaps the best systein. It requires a positive push into and twist to open it. Tlie quick release requires simply a squeeze on the side springs and pull out and, presto, out goes your oil.

By the way, this was my first trip as areal pilot, so I had experienced a real-life emergency very early in my flying career. Three months later. I was to get caught in lakeeffectsnow only two hours after leaving C.A.V.U. skies. I had an instant lesson in instrument flying thanks to an excellent controller.

Repair Your Own Voltage Regulator

By Stan Zamkow

On a recent flight, tlie ammeter stopped showing a charging current on our PA-28R-201, so my partner returned to our home field at Mansfield, Massachusetts. Steve Manning, one of the excellent A&Ps at Casey Aviation, diagnosed the problem immediately as a failed voltage regulator.

Instead of the automatic response of ordering a new regulator, he told me that the part which usually fails is a transistor which is bolted to the inside of the metal case. The symptom is reading (0) volts out on the yellow (output) wire when it is disconnected from the alternator, even though there are 12 to 14 volts on the red (input) wire. The black wire is grounded to the airframe with one of the mounting screws.

I removed the four screws holding the cover on the regulator and tested the transistor with a digital voltmeter. It indeed proved to be bad. (Glad those years of college weren't wasted.)

After replacing the transistor, reinstalling and adjusting the regulator to the specifications in the Piper Service Manual, the regulator was fixed for less than $10. Certainly an improvement over the $130 for a new one!

Our regulator was a 14-volt PAC-484121 made by Lamar, Inc., of Medford, NJ. Contrary to the service manual description, it is not sealed in epoxy and can be both adjusted andrepaired. The partwhichusually fails is a TIP-2955 transistor. (This is aseries pass transistor, for you technical types.)

If you have a different regulator, the transistor number may be different, though the procedure is the same. When you open it up, check the numbers printed on the transistor mounted inside the metal cover.

If your regulator has an adjustment hole in the cover, then it can probably be repaired as follows:

----------WARNING----------

Note the positions of all of the parts and the order in which they are assembled as you take them apart. The metal parts of the transistor MUST NOT touch the case or the mounting screw.

Open the case and the transistor is bolted on the inside of the cover, mounted with a short bolt, nut and plastic spacer in the transistor mounting hole. There is also a clear mica insulator between the back of the transistor and the metal box.

Make sure that the transistor has TIP-2955 printed on it (there will be other printing also), otherwise you will need a different transistor for your regulator.

Write down the order of the wires. From left to right with tlie pins coming out of the bottom of the transistor, they will probably be green-red-yellow.

Using a SMALL soldering iron, remove the wires from the pins. There may be more than one wire on a pin, but they should both be the same color.

When all of the wires are off, you may unscrew the bolt holding the transistor to the case. Carefully put the hardware down in the order in which it was removed, especially the plastic shoulder washer. Bend and cut the leads of the new transistor so that they are the same as the old one. Now,

spread a small amount of heat sink compound (thermal grease) on the back of the new transistor and mount it in place of the one you removed.

Be sure that it is on the iiisulator, not toucliing the metal case. The plastic shoulder washer goes over the screw, down through the hole in the transistor so that the metal screw does not come in contact with the metal part of tlie TIP-2955.

Now, solder the wires back on the leads, matching them with the correct leads from the list you made before you removed them. (You DID write it down, didn't you?) Make sure that there are no wires or solder touching any lead, other than the one you meant to connect it to, or to the case.

Before you reinstall the regulator, you can make a quick check by connecting the red lead to the battery positive terminal and the black lead to the battery or airframe ground, (You can use a car battery for this check, aiid it is usually easier to get to the contacts.)

If the repair is correct and works, the voltage between tlie yellow lead and ground will be greater than four volts. If not, check your repair work and if that is OK, then the transistor was not your only problem

Note: A common cause of regulator failure is shorting of the output to ground (yellow wire to airframe.) Before reinstallation, I suggest a check of the wiring from the voltage regulator connections all the way to the alternator field for broken insulation and short circuit to ground.

After installing tlie regulator back in the plane, liave it checked andadjusted by your mechanic. The system voltage should be 14.0 volts at 1,800 rpm with no electrical items on, and should not drop below 13.8 volts witli all the high amperage items (beacon, landing light, pitot heat, avionics) turned on.

Tlie TIP-2955 can be obtained from Active Electronics, (1-800-ACTIVE4 or 1-800-ACTIVE8) as their stock number 29031. Tlie thermal grease is part number 77024. I suggest you order an extra transistor as a spare, while the tube of grease will last a lifetime. If the transistor in your regulator is not a TIP-2955, Active may still have it, or try a local electronics distributor.

I recently saw a 28-volt regulator (PAC-550390 from a Lance and it used a type MJ4502 transistor. This may be a common unit in Piper 28-volt systems and may be repaired in a similar manner.

My lawyer says I must say that you use this information at your own risk aid that I expressly disclaim any responsibility for screwing up your plane and or hurting yourself or others. But other than that, good luck and support your favorite charity witli part of the money you saved!

Airplane Has Morning Sickness

Dear Terry,

We are on our second Piper in 12 years - this one a '79 Archer. It has only 900 hours on it, but we have flown it in most of the states, including Alaska.

Recently it has been afflicted with what my FBO calls "Moniing Sickness." It rolls over fine for starting, but occasionally it will start and seem to run on about two or three cylinders for maybe five or ten seconds before it comes to full life, after which it runs just fine.

I have used Alcor TCP for several years and lately added some Marvel Mystery Oil to the crankcase, which seems to help some. Because this is said to be a symptom of sticking valves, 1 wonder what other owners experience has been, and what they liave done for it.

Floyd Parrish
Los Angels, CA 90045

"Morning sickness" is a common problem, especially among the lower-powered Lycoming engines. Unfortunately, this is, indeed, the first sign of sticking valves.

One thing to check is your pushrod housings (the long tubes connecting the heads to the crankcase. Look for bent or bowed housings. If you find one, it is a sign of pushrod bending caused by valve sticking and sliould immediately result in grounding the aircraft until tlie problem can be corrected. (Tlie cylinder will have to be disassembled aid the hole for the exhaust valve will have to be reamed).

What happens is that deposits on the valve stem tend to freeze tlie exhaust valve when things contract after engine shutdown. Then tlie valve (usually stuck partly open) sticks.

Because an engine can be seriously damaged by starting with stuck valves, always pull tlie engine through before the first start of the day. If you have a valve stuck shut, you will have one pull which is very tough to pull the propeller through. If you have a valve stuck open, you will end up witli one pull in which there is little resistance.

In either case, have your mechanic check out the situation before you attempt to start the engine.

Concerned Over Cruise Prop Performance

I just bought my first airplaoe, an excellent 1981 Piper Archer II.

I am very happy wit11 it! I have one mystery to clear up, however. The mechanic on the pre-purchase inspection could not get the engine to run up to full book rpm speed. Tlie log book shows the prop was changed, not long after tlie airplane was new. My mechanic feels the new prop is probably a cruise prop.

The prop currently on the airplane is a Sensenich Model 76-EM855-0-62, SIN 18502K. Instead of 2,700 rpm the manual says I should liave at full throttle, the best I get is 2,500.

Can someone tell me what kind of prop this is, cruise, climb, etc.'? I would also like to know how I can obtain the performance figures witli this prop, sucli as rpni at 65 percent, 75 percent, etc., so I can fly by the rpm numbers.

Also, can someone tell me the advantages aiid disadvantages of such a prop?

Jim Dagnon
Arlington, TX 76016

Dear Jim,

It would appear that you have, indeed, a cruise prop on your plane. The specifications for your plane call for a Sensenich 76EM8S5-0-60 propeller (I believe the number you gave was a misprint.)

The important figure, of course, is the 60 and 62 at the end of the numbers. This indicates the "bite" of the propeller. The propeller on your plane would, if all losses are discounted, propel the plane forward 62 inches for one rotation of the propeller, while the stock propeller would propel tbe plane 60 inches for one rotation.

The effect of the change is the same as driving a car in overdrive (or with a lower ratio in the rear axle.)

The advantage is that at cruise, your engine runs fewer rpms for the same speed, resulting in quieter operation and potentially less wear on the engine.

The disadvantage is that the engine, during take-off, for example, does not run up to full speed and therefore does not develop full power. Also, it is easy to put an additional load on the engine by climbing too slowly and increasing the combustion pressure inside the cylinders.

And, of course, the other big problem is that you cannot get a power chart to give you the figures you want to run the engine at a particular speed. You have to work the figures out, approximately, yourself.

There is no harm caused by running either a cruise or a climb prop. Incidentally, the prop on your plane, even though nonstandard, may well be the prop which came with the plane. To get a cruise prop you do not have to actually change props - you merely need to have a prop shop re-pitch the prop you have, a relatively easy and inexpensive process.

You have two choices - either keep the prop you have and work out performance charts (work out a graph of engine rpm vs. fuel consumption, with the engine properly leaned. Then compare the figures with the standard chart and extrapolate to get the correct figures for your plane, The reason: an engine putting out 65 percent power will use the sane fuel even if the speed changes somewhat.)

Or, you can take your plane to a local propeller shop and have the propeller re-pitched to the original 60-inch specification.

A Door Seal You Can Count On

We get a lot of queries about door seals - where to get it and how to install it. So I thought it would be a real good idea to pass this tip on.

Johnny Mott, of St. Petersburg, showed me something I had never seen before. A Cherokee with a door which fits so well that you do not need to slam it shut. In fact, if you just gently close it, it clicks shut, like the door on a Mercedes Benz.

The aircraft is extremely quiet, too. The noise from around the door has been eliminated, making for a very quiet plane.

Johnny credits the improvement on anew type door seal. It is RB 5022 door seal available from Brown Aircraft Supply, 4123 Muncy Road, Jacksonville, FL 32207. (904) 396-6655.

This seal is a quarter-round soft rubber seal which can be stretched to produce a seal which follows the curvature of the door. The instructions emphasize that it should be put on tight.

So if you are bothered by door leaks or noise and plan on replacing your door seal, give this a try.

Trouble With Nosewheel Shimmy

Gary M. Howland, of WaKeeney, Kansas, complained about a nose wheel shimmy on roll out between 40 and 50 mph. The answer to his query:

Nose wheel shimmy can be introduced by any looseness in the steering system. It is quite common for it to appear at certain speed ranges as an out-of-balance condition sets up a resonance at a certain speed. The same thing often happens with the front end of automobiles.

We had one member who recently solved his problem by replacing the main gear tires on his plane. It seems they would set up a shimmy because of an out of balance condition and that shimmy would then transmit itself through the airframe and was then felt in the nose gear. Strange, but true.

Unfortunately, there are so many places the shimmy can originate that it will require some trial and error to cure the problem.

Clogged Primer Lines

By. M. M. Kovar

Very recently I found it necessary to remove all three of the engine primer line fittings on a Warrior to clean off the carbon deposits covering the small holes near the ends of the fittings. I used .020 inch safety wire to poke through the carbon deposits plus MEK.

This problem was noticed when priming for a start with the cowling remove ill connection with an alternator replacement -- an assistant noticed avgas squirting past the copper tube fastening nut rather than going into the combustion chamber.

I believe this item is worth of note for other members of the association.

Concerned About Engine Problems

During a trip back east from Colorado in October in our Arrow, I made two precautionary landings on two successive days. The first occasion was due to a recurring, short-term engine "shudder" which seemed to me as a fuel-starvation induced phenomenon. The mechanic who checked the

engine found normal compression, but a good bit of oil on the upper plug in cylinder number four.

We made a complete plug change, I did a quick test hop which showed normal engine operation, and we were on our way.

The next day, about 2:20 into the flight, I noticed oil pressure in the yellow range on the indicator. I thought it probably a gauge problem since I had experienced recent normal oil consumption and had almost sevenquarts during preflight, but landed immediately as a precaution.

Sure enough, the oil level was down to almost three quarts. The engine was checked for any significant oil leaks and since none were found, 1 filled the smnp and made a short hop home.

Inspection the next day by my home base mechanics showed only a minor exterior leak. A call to the nearby Piper dealer resulted in a suggestion to have the valve guide clearances checked. The shop chief there said that some Lycoming engines were showing out of tolerance well before TBO. (My IO-360-C1C engine was overhauled at 1,850 hours and I had about 2.560 at the time of these problems.)

The valve guide clearance check showed cylinders number one and two out of tolerance, with three and four acceptable. Some of the excessive oil consumption was attributed to oil entering tlie combustion chambers through the valve guides.

However, since there was evidence of over grinding of all four valve seats during the overhaul and since the wet upper plug was in number four, a complete top overhaul was recommended.

The "top" was done by Columbia Aircraft Service at Bloomsburg, Pennsylvania.

The main reason I am writing concerns what I was told was the probable cause for the valve guides being out of tolerance. The Piper sliop chief said that valve guides were designed to be lubricated by tlie lead in aviation fuel. Since the lead content has been reduced, there is apparently not adequate lubrication provided by the fuel, hence excessive wear well before TBO.

The same gentleman said that some of their Pipers were showing this excessive wear and some were not. There was no particular pattern evident. I was told that there is no fuel additive available to compensate for low-lead, nor is there any other way to aid lubrication of the valve guides.

My question is, must I look forward to replacing the valve guides on this engine every 7- 800 hours to avoid high oil consumption, plug fouling, etc'! Can you confirm that the mechanic's explanation of the valve guide wear problem is accurate? If so. is there any way to provide for adequate lubrication?

Ward G. Graham
Manns Choice. PA 15550

Dear Ward.

I referred your letter to Enrico Bottieri. of Aircraft Inspections Service. in Santa Anna. California. for his comments His letter follows

I am not overly surprised by Mr. Grahams' comments and apprehension on valve problems with his Piper Arrow engine. As we all know, the engines on our airplanes are the most valuable aid expensive part of owning aid operating an airplane. We have been besieged with problems from the fuel we use, including auto fuel. The problems are many and varied, but fortunately, there are answers.

Problem No. 1 - our so-called low-lead aviation fuel does not have low-lead content, but is compounded in such a way as to increase lead fouling problems and valve sticking. The lead fouling is caused by globs of lead that foul the spark plugs and short them out. In other cases, tlie lead and carbon encrustations build up on the valve stem.

The exhaust valve is the one more apt to become stuck. The exhaust valve runs at amuch higher temperature than tlie intake valve.

Auto fuel presents a slightly different set of problems. Most notably, a lack of lead in unleaded and the presence ofalcohol and other cornpounds that attack rubber and plastic parts. In addition, there are other problems with rapid aging and proper storage.

The solution - In autos, the lack of lead lubrication was solved by increasing the hardness of both the valve seats aid the valves. This was done to minimize the excessive wear and, in turn, allowed for the use of unleaded fuel. We certainly need to address the issue of environmental pollution. Lycoming has done a lot of work in improving their exhaust valves to give longer life and greater reliability.

The biggest threats are lack of maintenance, inferior maintenance, low utilization. extended oil change intervals. moisture and rust (especially in cold climates.)

In addition, another problem is perhaps unintentional, but abusive engine operation. Hard, low airspeed full-power climbs and low rpm descents result in shock cooling and cracked cylinders. Improper baffling that results in overheating, even in cold weather, also cause problems. There are excellent lubricating oils on the market - be sure to use the best.

What can you do' Tighten up on your maintenance and follow engine manufacturers' operating guidelines. Change your oil more frequently - each 25 hours is a good time interval. If you start the engine, fly tlie airplane to bring operating temperatures up to normal. If your airplane is in a cold, damp hangar, heat the engine with one of several engine heaters on the market. This should be an ongoing operation -some people use a light bulb under the cowl - I do not recommend this because of the fire hazard.

To avoid plug fouling increase ground rpm to at least 900 to 1,000 rpm and lean your engine. Most Lycomings run excessively rich on the ground. Remove, clean aid rotate plugs more frequently.

Proper engine operation and good maintenance will do wonders for reaching TBO on your engine. Keep the gunk and goop out of your engine with frequent oil changes and watch that air filter. Dirt, dust. rust and poor maintenance are the enemies. Like the ad says, you can pay now or pay more later. Proper engine operation will hold lead

fouling and valve sticking to a minimum.

And here is another tip - try using Champion REM 37BY spark plugs - they have a new tip to help reduce lead fouling.

Secret Ingredients - Alcor TCP added to fuel in proper amounts seems to help with spark plug fouling. This product is approved and readily available.

A product which is widely used and does a superior job of upper cylinder lubrication in addition to reducing the effects of lead fouling is in the mystery category - no one knows why. This product is not approved, but still gets mentioned a lot in maintenance literature. It has been around for many years. It is called Marvel Mystery Oil, comes in a red can, and looks a lot like red hydraulic fluid, which it is not. It is a superior fine upper cylinder lubricant and has been used in the automotive and racing industry for years. It also does marvels for freeing up stuck valves and piston rings. Remember - it is not approved and I only mention it for your information.

It is my opinion, as well as that of a prominent Califoniia cylinder overhaul facility, that with proper care and maintenance the Lycoming engines should reach their TBO times and that the present fuel situation does not retlect on that fact.

Anything else? -Yes! Because of the high cost of operating and maintaining your engine, you should get a leg up on what is going on inside that engine. One of the best ways to do this is with a good quality engine EGT/CHT scanner. Trend monitoring is an important part of finding problems before they hit your wallet hard, not to mention the peace of mind that knowing what is going on in the engine compartment can bring.

I strongly endorse and highly recommend the J. P. Instrument EGTICHT scanner. It is well built, accurate, easy to read, and comes with an excellent guarantee.

J. P. Instruments also makes a newly developed highly accurate tachometer. Most tachometers are off by 100 to 200 rpm. Many times when your airplane is not perfonning to specs, it is because the power is not set properly. You are relying on an instrument that is inaccurate and prone to errors. You can call JPI and obtain information on their toll-free line, 800-345-4JPI. (California: 714-557-9840, fax: 714-557-9840).

We can no longer take that dependable engine for granted. Overhauls cost big bucks - $10,000 and up. Treat your engine with all the respect that it deserves. We cannot and should not treat it like the engine in your car. Pedal to the metal will put a big dent in your wallet.

Replacing Your Wing Root Seal

Anyone out there planning on replacing his wing root seal'? It seems like such a simple job. Simply remove the old seal and put in the new.

Dave Asher, of Clifton, Texas, reports that the job is simple, but not quick. The problem, of course, is that you are trying to insert a seal with very little room - a one-inch seal in a slit which is, at places, just an eighth of an inch thick.

A Piper spokesman said, "Well, we put them on before we put on the wings."

Nonetheless, Dave reported that he was able to complete the job himself by using Vaseline to help make the seal responsive. However, the job took 40 liours.

Decals Available

I got a phone call from a member who bad painted his cowling and needed the decals of the Cherokee logo to complete it. By coincidence, at the same time I received a package from a supplier of decals. So, I *thought* I would pass the illfonnation on to everyone - it is a topic which comes up frequently.

Authentic reproductions of aircraft logos and graphics is offered by Harry Moody. P O Box 1359, Belleview. Florida 32620 (800) 749-2462. Prices of the Piper logos run from $8.95 to $12.95 with a $2.00 charge for shipping (and a minimum $10.00 order.)

More On Voltage Regulator Repair

By Dm Logue

The recent article on repairing your own voltage regulator was interesting. For those who are not "do-it-yourselfers," read on.

I recently had a regulator failure in my Warrior and contacted a company by the name of Hazotronics at 1622 East Whatley St., Longview, TX 75601 (903) 758-6661

They instructed me to ship the unit (Lamar Part *#0031-21)* to *them with* a check for *$30. About* ten days later I received the unit back, complete with a description of parts replaced, final test results and a yellow tag, since they are an approved FAA repair station.

The repaired regulator has worked perfectly and is considerably less expensive than $140 for a new one. Incidentally, the regulator failure was caused by an intermittent open circuit in the line between the alternator and regulator as a result of sloppy work done by the A&P on a previous annual.

Tracking Down Power Loss Problem

By Stanley Zamkow

Here is another troubleshooting story which may he helpful to other CPA members. It involves an intermittent power loss in our 1977 Arrow III

Last September, when attempting to depart Teterboro, I decided to abort the takeoff when the ground run didn't "feel right". After taxiing back to the departure end, I ran the engine up to the recommended 2,000 rpm and everything checked out fine.

I put the feeling off as just a result of a hot night and not enough flying lately. However, when I couldn't get more than 200 fpm climb on the next takeoff, the tower was

quick to approve an immediate 180 to land on the departure end of the runway.

The next morning I was able to tind a mechanic at Teterboro Aircraft Service who hadexpenence with this type plane (which is harder than you'd expect in the land of Lears and Citations.)

The diagnosis was a clogged fuel injector nozzle, and he proceeded to remove all four, clean them and perform a flow test. While one of the injectors had been a little loose, nothing was obvious visually, aid tlie tlow test was satisfactory. The subsequent takeoff was normal, and so the problem seemed to be solved.

More recently, a friend and his transition training instructor experienced momentary intermittent power losses, often after a stall series or slow flight. It was now winter, and the initial thought was water/ice in the fuel.

Draining several gallons from each side produced nothing but 100 LL, even after tlie drained fuel was warmed indoors to thaw any ice crystals.

With nothing else to go on, the consensus recommendation of the hanger flying association was to replace the electric fuel pump. This was suggested because someone had once had a problem with a leaking diaphragm allowing air into the fuel lines, causing a similar intermittent power loss.

Finally, after the problem occurred on a touch & go, we had some clues! The rpm would only get up to 2.100 at full throttle, and the fuel flow indicator needle was pegged at the high end of the dial.

We brought tlie plane into Casey Aviation to have the entire fuel delivery system opened up. We hoped to see if there were any pieces of hose of other junk floating around the fuel distributor or injector nozzles, which might account for the intermittent power drop.

Prior to disassembling all the fuel lines, a thorough engine inspection revealed that the alternate air door had broken off its hinge and was lying loose at the intake of the fuel injector servo regulator.

Now, in hindsight, the problem was obvious. The loose door would randomly move around the front of the injector intake, occasionally blocking airflow and causing loss of power. A few parts, a few hours, and the problem was gone.

The morals of this story are:

(1) That engine run up to 2,000 rpm has been proven to be an insufficient engine test. Our preflight checklist now has an additional item after the normal 2,000 rpm mag and prop checks: "Throttle to full power, verify rpm greater than 2,600 and fuel flow LESS than 18 GPH".

(2) Check your alternate air door whenever you have the top cowl off. I am sure that ours must have been hanging by only a small part of the hinge for quite a while before it broke off completely. Early detection would have eliminated the heart pounding excitement one experiences when there is a power loss during takeoff?

(3) Know what tlie fuel flow gauge actually does, so that you know what it really is telling you if you have a problem. It is important to know that in this, and probably all other fuel injected Arrows, the fuel flow gauge does not actually measure the fuel flow, hut rather tlie fuel pressure in the Flow Distributor at the top of the engine.

If all of the nozzles, pipes and hoses are open and fuel is flowing properly. then fuel flow is correctly related to the pressure. HOWEVER, if something is blocked, the flow through that part decreases and tlie pressure increases. This causes an incorrect indication of high fuel flow when there is actually less fuel flowing to one or more cylinders.

The best (and least expensive) way to learn is from the trials and tribulation of others. I hope you find this useful.

Wants Toe Brakes

Arthur Whitmarsh, of Manliawkin, New Jersey, asked about adding toe brakes to his Cherokee 160. The answer:

Toe brakes are commonly added to early Cherokees. Piper, in fact, offers a kit for the purpose. It is part 756-897 (756-899 if you want toe brakes on each side.)

Many members have installed the kit, but otliers say that with a price in excess of $1,000 for the conversion, the Johnson Bar works just tine for them.

New Source of Tail Leak

By Dave Doherty

One more note on the eternal Clierokee tail leakage problem, and it's one I haven't seen in print anywhere...

Last week. I vacuumed about a gallon and a half of water out of the rear carpets and the tail on my PA-32 after a series of heavy rains, and I vowed to tind the culprit(s).

I went to the airport at 10 p.m. during alieavy rain and climbed into the airplane. I removed the rear seats and pulled the hatch cover. Water was flowing back there, steaming in along the joints in the sheet metal that run down both sides of the tail.

The next morning, I retunied to the airplane. The tail section of the fuselage (maybe 8-10 feet long in the PA-32) is composed largely of two sheets of aluminum. The lower sheet wraps around the upper sheet, creating a channel on each side which can trap water.

Evidently, there was a seal between these sheets that deteriorated with time. The trapped water was flowing into the fuselage along the seams.

I don't know why the upper sheet didn't wind up on the outside of this seam, which would liave eliminated the problem. The PA-28 seems to be made the same way.

After cleaning the area, I ran masking tape 1/8" above and below the seam on tlie exterior of the airplane, and ran a bead of clear RTV along the seam. I worked the RTV with my fingers to he sure it adhered and covered the entire seam, then removed the tape.

You would never know the RTV is there unless you

know to look for it, and I had a dry airplane after the next rain. I will let you know how it works in the long term.

Cutting Tire Maintenance Costs

By Terry Lee Rogers

Preventative maintenance and careful ground operations are the best ways of cutting the cost of maintaining wheels and tires.

Contrary to what common sense might otherwise tell you, landing stress is not the major cause of tire failure. It is the heat buildup which occurs during lengthy ground handling.

Of course, be careful to keep tires accurately inflated. This is the single best way to cut down the cost of tire replacement. Then, handle the plane on the ground carefully; keep taxi speeds down, avoid unnecessary ground maneuvering and be gentle with the use of brakes. Unnecessary braking contributes enormously to the heat build up in tires and their early demise. Certainly avoid pivoting on one wheel.

When flying, keep touchdown speed as low as possible. Be sure that your idle speed is not too high--this, too, will increase your landing roll out.

Preflight tires and wheels every time you fly, Cracks in wheels and elongated bolt holes are death on wheels. Look for them and periodically retighten the through bolts in the wheels. Be careful not to scratch wheel halves when they are disassembled.

Avoid hard landings and use full flap, full stall landings whenever possible.

Take care of your wheels and tires and they will take care of you--and save you a bundle in the bargain,

Source of Plane Documentation

Interested in the history of your aircraft? Getting background documentation is easier than you may think.

All you do is call (405) 686-2131 or write the FAA Aircraft Records Section, P O Box 25082, Oklahoma City, OK 73125. It costs $3 to get every document ever filed with the FAA on any aircraft.

All the previous owners are listed and a copy of every 337 ever done on the aircraft is included. It comes on microfiche - just trot down to tlie local library and their machine will make a print of all the records.

Burned Up Over Burned Out Bulbs?

If you are upset over tlie short life and high cost of landing light bulbs, join the crowd. Landing lights are not designed for long life and most operators are not getting any happy surprises from their bulbs in the field.

The May issue of Light Plane Maintenance talks about possible solutions. We have covered the possibility of shopping for a farn-tractor equivalent in past articles. And although it can save a little money, the real problem remains - short service life - around 25 hours in many cases.

One possible solution covered by Light Plane Maintenance involves substitution of other landing lights. The main landing light bulb - a 4509 - puts out 110,000 candlepower. However, a 4595 lamp, a direct physical replacement - puts out only 60,000 candlepower, but it has a life expectancy of 330 hours, rather than 25 or so.

Both of these bulbs are 4.5 inch diameter bulbs. If your bulb is a 5.75 inch model, try a 4536.

The replacement bulb, at discount. may cost more than tlie standard bulb (probably about 50 percent more). but tlie longer life more than makes up for the cost differential.

The big rub, of course, is that direct substitution of these bulbs is not exactly legal. You will, to be legal, need approval of your FAA GADO. LPM magazine suggests that you should get little resistance from tlie office, but, as many of you are aware, that may depend upon whether your GADO inspector has just had a cup of coffee or not.

Control Column Universal Replacement a Hassle

For those owners whose control columns seem a little loose, it could be the universal joint behind tlie panel. Unfortunately, replacement may be a real hassle, according to member Gary Mogge.

The universal joint is part number 62834-02 which is a common unit to fit all Hershey Bar wing PA-28 models. Unfortunately, it comes from the factory in a form which needs further alteration.

The universal was mated to the sprocket in early model planes with an AN-3-11A bolt, but in later serial number models, the bolt was replaced with a tapered pin.

If your plane is an early model, you need to drill out the hole to fit the bolt, while if it is a later model, you need to use a drill and then a tapered reamer. According to Gary, that reamer is just about impossible to find out in tlie field.

In addition, the universal supplied to Gary would not have fit even if lie could have found the reamer in that the hole in the end was off center by 15 thousandths of an inch.

If anyone has any suggestions on this operation, we would be happy to hear from them.

Plane Has A Cessna Engine

Brad R. Kingman, of Akron, Ohio, was infoniied by his mechanic that tlie engine on his plane, a Lycoming 0-320-E2D, was tlie incorrect engine for his plane. He wondered what to do. The answer:

This situation, unfortunately, comes up occasionally. I don't know whether some people are unaware that engines which look alike are not necessarily tlie same or whether unscrupulous owners switch engines to save a buck

hoping no one will discover their deed.

To answer your first question, yes, your mechanic is right. That engine should be sitting in the front of a Cessna.

However, it is possible to convert the engine to an E3D by utilizing a Sensenich M74DM or 74DM6 propeller. Perhaps the conversion has been made on your plane but the paperwork was not completed.

According to the type certificate data sheet No, 2A13, a Cherokee 140 can have an E2A or a E3D engine. I am sending a copy of a 337 form which converts the E2D to an E3D.

You will note that additional changes are necessary, including replacement of the propeller flange hushings, the accessory case (P/N 72506), Gear (P/N 75072 and the plunger (P/N 61544).

The other alternative would be to try to find a used or rebuilt engine from a 140. The conversion would, of course, he the most economical way to go.

Questions On Leaning His Lycoming 0-540

I read the July issue on leaning the 0-540 engine and have a few questions. I have attached a copy from the Piper owner's manual. It reads as follows:

"If an optional exhaust gas temperature gauge is installed, best power mixture may be more accurately set by leaning to 125 F on the rich side of the peak temperature.

"Best economy fuel flow may he set by leaning to 50 F on the lean side of peak temperature. Should the current AVCO Lycoming procedures conflict with the above leaning methods, the Lycoming procedure should be followed."

We own two 1974 Cherokee 235's and put almost 2,500 hours on one engine using the 50 degree lean setting. However the plane does not have much power at that setting (75% power) when fully loaded. We average around 14.3 gal/hour on the 50 degree lean setting.

Would you please contact Lycoming and find out if these are still their current leaning recommendations.

Jim Richmond
El Cajon, CA 92020

Dear Jim,

I contacted Michael E. Caldera, a field engineer for Lycoming, who said the Piper recommendations are pretty close to what Lycoming recommends.

The Lycoming recommendation calls for a limitation of 150 degrees on the rich side of peak tor peak power, with an operation at peak EGT for best economy cruise.

Both recommendations assume the engine isoperated at 75 percent power or less and that the cylinder head temperature is monitored for any unusually high readings.

Eitherthe Piper or Lycoming recommendations will work well for you. The Lycoming suggestions are a hit more conservative than Piper's.

Incidentally, the Lycoming 0-540 Operators Manual is available from Lycoming. It is part number 60297-10.

Some Additional Rechroming ideas

Here are a some sources recommended by CPA members for re-chroming:

From Frank Elwell, of Nevada, comes a recommendation for Chromal Plating Co., 1748 Workman St., Los Angeles, CA 90031 (213) 225-6121. He says the company has been around a long time and knows what it is doing. The person to contact at this company is Robin Bokelman.

Finally, an Alabama company reports it can do the work. Patrick McCarty, of industrial Plating Co., P O Drawer 2365, Anniston, AL 36202 (800-525-6408), wrote:

"Our company can pre-grind, re-chrome and finish grind struts. We are also an FAA certified repair station.

"If any members are interested in our services they can call us at 800-525-6408."

The price of re-chroming (about $100 to $200 per leg) sure heats the price of about $800 for new pieces.

But as member John Toale, of Coral Springs, Florida, suggested, do not dismiss the advantage of purchasing a unit from a salvage yard. He purchased a gear leg, in good condition without pits, for $50 from a source found in Trade-A-Plane. The low cost beat all re-plating companies by a wide margin.

Know Your Fuel System

By Al Snyder

Aircraft owners as a general rule don't understand how fuel is stored in their aircraft. In fact few pilots realize the weight of fuel is more than the structural weight of the wing.

A Cherokee 140-180 wing weighs 110 pounds. but the 25 gallons of fuel weighs 150 pounds.

The Cherokee wing includes, as a structural member, a removable fuel tank. It is part of the airfoil skin surface portioned off with an internal three sided bulkhead which is sealed and riveted to the skin surface. This riveted tank is secured to the surrounding wing structure by screws into nutplates. Such is the basic Cherokee fuel tank.

The Cherokee fuel tank is constructed of a skin of .040 2024-T3 Alclad (the basic structural fonn of aluminum used throughout the aircraft). It uses four hat section stiffeners, two top and two bottom, flush-riveted to the inside of the skin laterally. MS20426AD (dimpled head) rivets are used because skin and stiffener are heat treated.

The bulkhead is .040 2024SO, a soft, non-heat-treated fonn of Alclad. It is hydro press formed into a three sided part with a flange around the edge.

The edge is sealed and riveted to the skin in a jig. MS20426A rivets (smooth head) are used because of the soft wing (it has a two degree twist from inboard to outhoard).

Various fittings are sealed and riveted to the skin and bulkhead. Filler neck, drain vent and drain plate on the

skin. Vent fitting, sender boss, outlet fitting and rivnuts for the vent line on the bulkhead.

It is important to understand the different types of rivets and where they are used. An AD rivet is heat-treated for strength and used in all structural attachments (skin, ribs, spars, etc.) An A rivet is used in non or semi-structural attachments. It is not heat treated and is used in its original soft condition.

Both rivets become work hardened (instant heat treating) when riveting action is performed with a rivet gun and bucking bar. Since tlie bulkhead is in a half hard (SO) condition an A rivet is used so that the rivet holes in the bulkhead will not be enlarged.

Some backgrouiid on the tank design may be helpful for the owner to understand why tanks are not interchangeable from one wing to another.

During the original design of the Cherokee tlie production of the wing had to be considered, Tlie question of fitting the tank to the wing or the wing to the tank had to be decided.

It was decided to build the wing as four subassemblies: (1) spar with rear skins, ribs, rear spar from butt to tip, (2) inboard canted skin, gear box and ribs, (3) outboard two L.E. skins and ribs, and (4) tlie tank. These four subassemblies were to be mated in a master jig.

Since the tank wouldn't be removed very often and in light of the costs of manufacture, tlie most logical decision was to build the wing and fit the tank after tlie other tliree subassemblies were secured.

This meant the tank would be built oversized and then fitted to the wing by trimming and filing until it fit the opening.

Tlien four drill straps were aligned to the edges of the tank for the 70 screws to secure the tank. These drill straps weren't interconnected because the tank opening wasn't constant. Production tolerance it's called.

At Skycraft we have noticed as much as 1/4 inch difference in width of the tank. Tliat means the holes don't line up if you try to install another tank from another wing. If you elongate the screw holes you're compromising the structural strength of the wing.

The only way is to get a new tank, which is blank mid oversize, trim the tank to fit the opening in tlie wing, then make a transfer template to pick up the original hole pattern. This is the only way to maintain the structural integrity of the wing.

Why the problem with leaking Cherokee tanks? Taken on the whole it's a maintenance problem with all aircraft, not just Piper.

At tlie time the Cherokee was first designed the sealer in vogue was gas resistant, but not gas proof This lead to overcoating tlie sealer with a sloshing compound that would keep the fuel from contacting the sealer.

Piper sloshed all the tanks until sometime in late 1968. Then they changed the sealer to a gas proof type which didn't require sloshing. Since then Piper has had very little problem. But most of the Cherokees were built before late 68, so tlie problem of leaking fuel tanks is still with us.

Piper still recommends sloshing. Why I don't know. They no longer use it in production tanks. There was even a service bulletin about sloshing coming off the side of a tank. Tlie bulletin suggested cleaning tlie tank and resealing.

Sloshing never worked very well and did create a lot of problems. When repeated several times in tlie same tank it plugged up the drain. Water then went down stream to the firewall quick drain.

In rare occasions it plugged the outlet screen cutting the fuel from that wing tank.

The better way is to have the tank taken apart, completely disassembled, cleaned to bare metal and resealed with a gas-proof sealer. It's more expensive initially, but it is cheaper and safer in the long run.

How do you tell what sealer your tank has? Look in the tank, through the filler neck - use a flashlight of course, and check the color of the sealer.

Light grey covered with sloshing is the old sealer. Dark brown on clean bright metal means the gas-proof sealer.

If it's the old sealer, getting the tank resealed is the only way to really solve the leak problem and the loss of expensive fuel.

If you have gas-proof sealer and have a leaking rivet on a stiffener, it can be fixed with a cherry rivet and sealer without removing tlie tank. If the leak is off the back of tlie tank or along the outboard lower edge, it can be one or both of two things: either tlie sender unit is leaking (rarely a crack in the bulkliead below the sender) or the vent line hoses have cracked.

Both problems will require removing the tank to perform service. Servicing the sender unit will be covered later.

A rusty filler neck occurs due to lack of service. If it's just surface rust with no pitting, wire brushing and chromating when needed (once or twice a year) will save you a heap of money.

If it is badly rusted and pitted you run a good chance of getting water - lots of water - in the tank.

The filler neck can only be replaced froni the inside. This requires opening the bottom side of the lank, removing the neck and resealing and riveting in a new stainless neck, Tlie necks are only available from Piper.

Occasionally we have found fatigue cracks in the bulkhead lower edge in the flange radius. It can be repaired witliout taking the tank apart.

Sender units are no longer available, but we've found they are very durable. If you have one that is not working quite right try this (we assume the tank has been removed of course):

Remove the sender from the tank, clean the base of the sender and tank with acetone or thinner, mix a little etcli with water (1:4), pour the solution in the cup that houses the rheostat and contact, swish the sender arm to extremes about twenty times, flush tlie unit liberally with water, and finally check on a continuity meter for smooth operation between 3 and 20 Ohms (Stewart-Warner), or 1 to 20 Ohms (AC).

The latest units are sealed and can't be worked on. Buy new.

On the AC models tighten the inner nut. On the S-W's use a 10132 rivnut puller to tighten the screwnut--gently. Also clieck the float. If it is worn replace or shim it up,

Put the end of the float wire in a vise and flatten. It will keep the washer and float from coming off and costing a couple hundred dollars to remove the tank just to replace the float.

Lastly, remember that the reason for removing the sender was that it leaked. Reinstall it with a fuel-proofsealer.

Check the vent system. Install new hoses while the tank is out. Blow out tlie tube. Insects love to call it home. Also the vent drain.

Open the rear hole to #45 (.082). A thick coat of paint may close the smaller hole. This is one of two vent systetns. The other is in the filler cap. Check it too.

It's a good time to remove tlie nipple and screen at this time. Clean and inspect both. Sometimes the screen is partially clogged or even broken. It's one of three screens in the fuel system. The other two are a finer screen in the firewall drain and a very fine screen at tlie carburetor inlet. Use a fuel-proof sealer on the third and more threads.

Sometimes tlie quick drain plate is cracked or leaks around the outer edge. It can be fixed without removing the tank.

Fly the fuel to a low level and then drain the rest. Remove paint from the raised section of the plate and check with a 10 power glass. If cracked it will have to be replaced so order one from your Piper dealer, the part number is 62033-00.

To remove the plate, first remove tlie QD, then drill out the eight rivets using a #30 drill. Be careful not to touch the screen inside.

If using the same plate ream the eight holes with a #27 drill. Mark position. Use a sharp scraper blade and hammer to pry off the plate. If replacing the plate remove it. Position a new plate with couple of clecos, mark the position, open all eightholes with #27 drill and remove it.

Clean the skin and plate to bare metal. Wipe the plate, skin and rivets witli thinner.

You'll need eight CR3243-4-03 cherry blind rivets. Mix a small amount of PRC 1422 sealer. Using an acid brush cut to 3/8 inch, coat liberally the body and stem of all eight rivets.

Coat the flat side of the plate to within 1/2 inch of center. Position a cleco coated plate to mark on tlie skin. Insert rivets and pull till stem breaks. Clean excess around plate aid inside liole with thinner. Wait overnight before installing QD and fueling.

Another easy fix which has been costly is tlie vent drain -the little tube that protrudes out of the bottom, outbound, at corner of the tatik. It is easily broken.

It too can be fixed witliout removing the tank. Secure a section of aluminum 3/16 inch OD x .22 inch wall tubing 1 5/8" long and a dab of epoxy glue for materials. A fine file. #12 and #45 drill bits and a drill.

Use the #45 drill bit to deburr ID and a file for OD. Use the #12 to drill up the broken fitting in the tank 3/8 inch.

Apply a thin coat of epoxy to the upper 3/8 incli of tubing. Insert in the fitting, rotate a bit, and align witli scarfed edge forward.

Hold in place with a piece of tape till the epoxy sets; then remove the tape. It lakes maybe half hour at tlie most. Screws are another problem. Many of the stainless kits include screws for the tanks but are not structural. How do you identify these screws'!

First there are 70 in each tank, 40 short and 30 long. Look for a small 'C' stamped in tlie head. It's the stainless identification.

The call out for the screws are MS27039C0809 for short and MS27039C0812 for the long. Tlie steel cad plated screws carry the same number minus the C.

All of these screws have an unthreaded shank so that the threads are never bearing on tlie sides of tlie hole. A machine screw is threaded to the head. OK for non-load bearing attachments like inspection plates, etc. Kits for most of the above fixes are available from SKYCRAFT CORP, 603-964-1450

FAA Might Approve Cessna Engine

Recently we ran an article about a member who found he liad a Cessna engine installed in his plane. This is a problem which is apparently not unique - we have received several such reports.

Tlie problem usually surfaces when an eagle-eyed inspector refuses to return a plane to service after an inspection. Tlie plane is tlien grounded until someone thinks up a solution.

One member, Gus Dreyhaupt, of Princeton, New Jersey, discovered he had tlie same situation. His solution - call tlie FAA.

"They sent an inspector down to look it over," he said. "Our plane had been flying with that engine for 15 years and, based on tlie fact that it was working perfectly. the inspector granted us a 337 for a onetime application. The 337 stays with the plane and it is legal."

Dreyliaupt says the only difference betweeii the engines is the propeller flange - one is designed to he able to accommodate a constant speed propeller, and one is not.

Unfortunately, not all FAA field offices have the same procedures and whether to approve an installation or not is pretty much at the discretion of the individual examiner. But when all else fails, perhaps it is time to call the FAA for help.

Another Example of Overzealous AI

1 received a telephone call from a member with a 1976 Arrow and a major headache. It seems he took his plane in for all annual and the AI refuses to return the plane to service until all of the oil, fuel and hydraulic lines on the

plane are replaced.

The problem is that the plane bas 3,000 hours in service and still sports the original hoses. Now I am not saying that is a good idea - we have covered in the past the fact that Piperrecommends replacing hoses after they have acquired 1.000 hours in service.

The problem is, however, that by requiring replacement of all hoses at once, the AI is creating two problems: high cost and lengthy down time.

The member was quoted a price of about $2,000 to replace every hose and fitting on the plane, and that price does not include labor.

Inaddition, many of these items are not currently being stocked by anyone, so the plane will have to be grounded until new ones are manufactured.

And although the member tried to get another AI to look at the plane and render an opinion, the second AI was hesitant at reviewing the work of another AI. The FAA position - these people have discretion so they can use it - the FAA will not second guess their decisions.

power Upgrade Woe With Cherokee 140

Jim Ragazzo, of Trenton, New Jersey, asked about converting an engine to 160 horsepower. The answer:

The Cherokee 140 is converted to 160 horsepower by using new pistons and cylinders which substantially changes the compression ratio. The new engine must utilize 100 LL fuel (not 80).

There is a conversion available. New England Propeller sells the paperwork for the conversion for under $300. This allows the engine to he converted to the higher horsepower.

However, there is one caveat. Piper used two engines in the Cherokee 140. Early models, up to 1971, utilized a 0-320-E2A engine, while 1972 and later models utilized a 0-320-E3D. The conversion works only on the earlier models.

Anyone interested in changing their early model 140 to a 150 horsepower engine should contact U. S. Propeller Service, P O Box 415, East Haddam, CT 06423 (800) 873-2388.

The engine conversion does not change the payload characteristics of the plane.

Solved Problems With Air Conditioner

By Tom Messina

The previous owner of my Cherokee had removed the air conditioner. When I purchased it, I requested the air conditioner he reinstalled.

For the first couple of years the system worked fine. Then it just started to "eat" alternator belts. I tried all kinds of things to fix it. I was about to give up when my mechanic suggested that 1 ask Piper!

Since West Palm Beach is a very short distance from Vero Beach, I flew to Piper Aircraft to talk to their Engineers. The Engineer said that the problem occurs when the pulley on the alternator wears down.

The pulley is aluminum and the flywheel and idler are steel. When the pulley wears down the belt hits the bottom and rolls over. He said the helt should never touch the bottom of the pulley, if the belt touches the bottom, the pulley must be replaced.

So, 'heck to he sure that the belt is being held up at the top of the pulley by the neck and that the "V" on the helt is suspended from the neck and not touching the bottom of the groove.

Blowing fuses was another problem.

First, the mechanic found a grounded out wire coming from the compressor. But, it still would blow a fuse after a few cycles.

We solved that by putting the fan on it's own switch. Now, I can run the fan without turning on the air conditioner. Plus it stops the power surge when the system is tuned on.

I haven't had aprohlem with the air conditioner for a year and a half. I use it all the time here in South Florida and it feels great!

Alternator Belt Solutions

By Jim Orosz

I purchased a 1973 PA-28-200 Arrow, N16362, about four years ago. It came with factory installed air conditioning. I too wanted to pick up some more useful load, so at the first annual I had the air conditioning compressor and related parts removed.

My first reaction was disappointment at the modest 35-40 pound gain in useful load, but then the fun began.

Within three hours of the annual I noticed a half twist in the narrow alternator V belt. A new belt was installed (which requires pulling the prop in the Arrow).

Guess what? Within two hours the half twist was hack, in spite of a brand new helt.

Over the next six weeks I went through two more belt changes, pulley alignment, bracket adjustments and three A & P's, all to no avail. Within a few hours of correction, the half twist would reappear which of course would accelerate belt wear tremendously.

After telling my tale of woe to all how would listen, I ran across a grizzled former Piper service chief. I no sooner said "twisted alternator V belt" then he said, "Let me guess, you had your air conditioning compressor removed, right?'

Yup. That's the problem. The solution? Either replace the flywheel to accommodate a larger belt (very expensive) or hang the A/C compressor hack on its bracket. I chose the latter and have not had a another problem with the helt since. Evidently removing the compressor altered the bracket stress enough to set up a vibration or torque that caused the belt to continually twist.

Lycoming 0-320: A Great Engine

By Terry Lee Rogers

The Lycoming 0-320--the engine found in the Chero kee 140 and Warrior models, is one of aviation's most beloved power plants. It is one powerplant which has a good service record (except in the ill-fated 0-320-H version used in some Cessna products).

It is used in so many Piper models that I thought it would be nice to take a little closer look at the engine this month.

First of all, let's define the engine. The 0-320 is a family of engines with approximately 20 different variations. The "O" in tlie designation means that the engine has opposed cylinders (as do nearly all current general aviation models) and the 320 designates it as a 320 cubic-inch engine.

The design originated in 1953 as little more than a bored out 0-290 with hydraulic lifters. And it turned out to be one of Lycoming's brighter ideas. Nearly 60,000 have been produced over the years, not including fuel-injected versions. It has been one heck of a success.

The basic model is the 0-320-A1A used in such planes as the Tri Pacer and the Apache. It was configured for a controllable-pitch propeller and had a 5.125 inch bore and a 3.875 inch stroke. It used Bendix magnetos and had a compression ration of 7:1

Now, let's examine the variations of this engine which are used in Cherokee model aircraft.

The 0-320-A2B was used in the original Cherokee 150. It was tlie same as tlie -Al A, but had a straight riser in the oil sump.

The 0-320-B2B was used in the Cherokee 160. It was the same as the A1A except it had 8.5:1 compression ratio pistons, and had a straight riser in the oil sump.

The 0-320-D2A, used in some later model 160's, had the higher compression pistons, used 318-inch attaching bolts, and used a "Dynafocal" engine mount.

The 0-320-E2A, used in the 140, had the Dynafocal engine mounts, and 318 inch mounting bolts. It also used the 7:1 compression pistons.

The 0-320-E3D, used in the Warrior, had 3/8 inch bolts, the 7:1 compression pistons, the 0-235 main bearings and Slick magnetos instead of Bendix.

There have been some AD's against the engine over the years, but most apply to the H series Cessna variant. Some others, however, apply to versions used in Pipers.

An early AD, 63-23-02, covered guide wear in engines with 7116 inch diameter valve stems. Lycoming also issued a service bulletin, No. 293, which prescribed a "wobble" test to check for valve guide wear.

This would be a major AD but for the fact that nearly every engine affected has since had tlie valves replaced with 1/2 inch valves. Nonetheless, it is possible that an engine may still exist which has never had the valves replaced.

Certainly, such an engine should riot be flown at all and should have the engine rebuilt immediately.

AD 73-23-01 applied to the -D1F and -D2A variants (Cherokee 160) and required magnetic particle inspectioo of piston pins within 50 hours. The piston pin in question, P/N 69650. has been superseded, but some are still in the field.

AD 75-08-09 required replacement of old-style Woodruff-key oil pump impellers with a new style impeller using a flat-side drive.

But that AD did not solve the problem of oil pump failures ill Lycomings. Lycoming continued to manufacture impellers with "sintered-iron" construction, and they continued to malfunction. So...

AD 81-18-04 called for replacement of all sintered-iron impellers with hardened steel varieties. The replacement was to be made at overhaul or at anytime that the accessory case was off, but in no case was the life of tlie sintered-iron impeller to exceed 2,000 hours.

There is one tiiajor problem with this AD. Lycoming did not keep records showing which engines had sintered iron impellers and which received another oil pump configuration which had a hardened steel driving gear and an aluminum driven gear.

This combination has not presented a problem, but if you own a plane with a pre-1982 engine, you have a difficult problem if you decide to bust TBO unless you KNOW for sure that your plane has the airworthy pump configuration.

And finally, AD 87-10-06 calls for inspection of tlie rocker arms on all engines manufactured between July 1, 1985 arid October 8, 1986 (or rebuilt during that period using Lycoming part number LW-18790 rocker arms).

Despite the AD's, the 0-320 has proven remarkable trouble-free in service. Many mechanics, in fact, refer to it as a bulletproof engine.

This applies especially to the bottom end. The 0-320 bearings, rods and crankshaft rarely if ever give trouble during a THO run or thereafter.

The top end, too, is reliable, but, like many other Lycoming engines, it has been known to suffer from valve-sticking.

Valve Slicking

If the 0-320 has an Achilles heel it is the problem of sticking valves. So let's take a few minutes out from praising this engine, to studying this potential problern. For those of you who own planes with other Lycoming engines. please pay attention, too. This may affect you.

Valve sticking has been a problem with certain Lycoming engines for years. The company lias addressed valve sticking with a large number of Service Bulletins: No. 274 in 1960. 289 in 1962,388 in 1975,419 in 1978. The problem has also been addressed in Service Letter L197 in 1982, Service Instruction 1425 in 1983 and Service Letter L205 in 1984.

The problem occurs because of close tolerances between valves and valve guides in aircraft engines. There is no consensus as to why the problem occurs more frequently with Lycoming engines than with Continental engines. One suggested cause may be the use ofsodiuni filled valves in Lycoming engines.

Lycoming lias developed a "wobble test" to determine whether the valve guides are too carboned up and need to be reamed out. And although not everyone knows it, the "wobble test" is considered mandatory by Lycorning at the half TBO point.

The test itself is pretty simple and can be accomplished quickly, although it does require a special tool - Lycoming tool ST-7I. The rocker covers and rockers are first removed from the engine. Then the procedures specified in Service Bulletin 388A are performed.

Basically, the mechanic then wiggles the valve stem back and forth and measures the movement with a feeler or a dial indicator. if the valve wobbles too much, tlie engine is suffering from worn valve guides. Too little wobble means that the guides are filled with varnish or carbon and are likely to stick. They will have to be reamed out to the proper dimension

One reason given for the preponderance of the problem among Lycoming engines concerns tlie sodium-filled valves. Lycoming uses these valves to achieve better valve cooling.

But the result is that the sodium transfers a large amount of heat from tlie head to the stem very quickly. This heat transfer causes the nickel-alloy stem to expand. If the clearance is loo low at low-temperatures, it is reduced even further when the engine is hot and sticking becomes likely.

Add some varnish or some carbon in the valve guide and the problem is even worse.

Eventually, a valve will stick open and become one with the piston, or it will stick closed and a bent push-rod will occur. Often, the sticking will occur after the engine is shut down so it will not become apparent until the next time the engine is turned over.

If the valve guide clearance is too great, the engine develops two problems - the engine uses too much oil and valve sticking or breakage is a problem because the heat transfer from the hot valve stem is reduced by lack of contact.

Or when your mechanic checks your valves using the wobble test (Service Bulletin 388A), if he finds the fit too tight, the guides must be reamed and then honed (Service Instructions 1200 and 1425). Service Instruction 1425 provides a procedure for performing the job without removing the heads from the engine.

Other Service Information

In addition to the information on valve guide reconditioning, Lycoming has published a number of additional service letters, service instructions and service bulletins on the 0-320 engine. Among others, they include:

SB 456 & 385 - Discuss the oil pump problems.

SB 466 - Concerns inspection of oil filter adapters manufactured prior to 1983.

SB 240 - Discusses parts which should be replaced at the time of engine overhaul

SI 1136A - Discusses half-inch valve retrofit.

SI 1418 - Describes a procedure of using walnut shells to blast-clean lead deposits from combustion chambers.

SI 1247B - Talks about Teflon hoses as replacements for oil and fuel hoses.

SI 1037J - Describes the proper pistons, rings and valves for Lycoming engines.

SI 1218A - Discusses integral-gear and camshaft compatibility (including appropriate part numbers).

SI 1319A - Talks about installation of an external oil filter.

SI 1267B - Discusses problems with piston plugs.

SI 1255, 1316A & 1423 - Discusses the oil cooler bypass valve.

SI 1172C - Discusses installation of an adjustable oil pressure relief valve.

SI 1409A - Permits the use of LW-16702 oil additive to help reduce wear.

SI 1098D - Discusses propeller indexing to the crankshaft flange.

SI 1256D - Discusses appropriate valve guides for installation.

SL L210 - Discusses the problem of hard starring.

SL L-197 - Discusses preventive maintenance procedures.

Any of these publications can be ordered from Avco Lycoming 625 Oliver St., Williamsport, PA 17701. While you are ordering, you might want to purchase tlie overhaul

manual for your engine P/N 60294-7-4, which costs about $40. A complete collection of service bulletins is $45.

Caring For Your Engine

Proper maintenance and good operator technique will increase the useful life of your 0-320 engine and greatly increase the likelihood of reaching or surpassing TBO.

As we stated, valve sticking is the engine's major problem and it has gotten a good deal worse since the near elimination of 80 octane fuel. The extra lead in 100 LL is enough to exacerbate the situation. Use of unleaded auto fuel or tlie use of TCP fuel additive is a big help.

Changing oil often will help eliminate deposits. Certainly, changing oil and filters at least every 50 hours will keep the oil clean and cut down on the problem

Leaning the engine is extremely important. The engine should be leaned anytime it is putting out less than 75 percent power. This includes the time spent on the taxi way, during run up, in cruise climb, and descent.

In fact, you should probably be leaning your engine at all times except when takeoffpower is applied. (Don't overdo the leaning, however. An over lean engine will tend to run hot and you may end up burning the valves).

And pay attention to the engine - it often provides early warnings which will tip you off to a developing problem.

One such sign is known as morning sickness. The engine will run rough after the first start up of the day, but will smooth out after the engine has had a chance to warm up. This is a warning of imminent valve sticking.

Another sign occurs in the air. Generally, the pilot enters a descent for landing aid suddenly the engine will begin to misfire and shake. The problem may persist or it may suddenly vanish.

Do not ignore either sign or assume that the problem cleared itself and will go away. Instead, inspect pushrod tubes for any bending (a sign the valve had tried to stick shut) and confer with your mechanic immediately. A stuck valve could get to be pretty expensive and you would be wise to become alerted to the problem early.

And one final bit of advice. If you wait your engine to achieve or surpass TBO, the main ingredient necessary is exercise. Experience has shown that an engine run regularly is likely to make TBO while engines which sit regularly and fly infrequently rarely do. Inactive engines are generally those you see listed in airplane ads which show such things as 1,500 hours TT, 300 SMOH, 25 STOH.

Lycoming bases its TBO recommendations on the assumption that an engine will tly at least 15 hours each month. Tlie company also recommends that any engine he specially prepared for storage if it is to be left sitting for 30 days or more. Airplanes which fly infrequently simply do not last as long as planes which are flown.

Third Window & 180 hp Conversions

John Engle, of Mesa, Arizona, asked about a featured Piper of the Month - a Cherokee 140 owned by Robert Harris of Redwood City, California, which had a 180 horsepower engine mid a "third window" conversion. His reply:

I put your questions to Robert Harris, and lie answered as follows:

The third window modification was obtained at Isham Aircraft, 4300 Palos Verdes, Valley Center, KS 57147 (800-899-2707). Parts are available from your Piper dealer and it takes about a day to install.

Isham supplies full-size blue prints, side windows. and instructions. Tlie cost was around $ 300.00 last year.

The window modification was cosmetic but improves visibility. I have a Dalmatian wliich flies with me frequently and he enjoys looking out the third window as he sits in tlie back.

But if the third window installation was cosmetic the 180-horsepower engine with constant-speed propeller was useful.

My original 140 horsepower engine had about 3.400 hours on it so I was considering a 160 horsepower engine when I learned about the Avcon conversion kit, which included a constant-speed propeller.

I purchased the kit from and had it installed by Wildcat, 2121 S. Wildcat Way. Poterville, CA 93257 (209-784-9440).

Installation took about a week and cost $12,000.00 in 1980. I felt it was a good investment since I liad no intentions of ever selling my plane.

The most dramatic change that I noticed since the new engine was installed was a rate of climb of about 1.200 feet per minute sea level.

The top speed is 150 miles per hour and service ceiling is 18,000 feet. I now have 420 hours on the engine and it has not liad any problems.

I talked to Harry Dellicar. owner of Del-Air last week and he said that he has performed about 200 180 horsepower conversions in tlie last 20 years on Cessna 172's and Cherokee 140's. The current cost varies to a maximum of S22.000.00.

In the past ten years I have flown out of Flaggstaff, Arizona and Lake Tahoe, Nevada witli a normal load and a to the amazement of onlookers familiar with the Cherokee 140 an unbelievable rate of climb.

I have been really pleased with the performance of the engine modification and think it was a wise investment.

Nosewheel Shimmy

By Gary M. Howland

About a year ago I wrote to ask about fixes tor shimmy in the nose wheel of my Cherokee Based on your

letter and the several suggestions in Hints and Tips I tried replacing the bushings in the nose wheel scissors, bolts were OK and not replaced.

I also replaced the pin at the top of the strut going through the steering ann with a slightly larger one. These solved the shimmy problem and it has not recurred.

Earlier I had also tried a new shimmy damper, but it didn't solve the problem, so we put the old one back on. I don't know which of the two fixes: the pin or scissors bushings actually solved the problem, but suspect it was the scissors bushings as the pin had only .005 wear and thus the replacement pin was only that much larger.

Auto Fuel Ready For Cherokee 180

Recently we pointed out that auto fuel was not permitted in the Cherokee 180, but that Petersen Aviation was working on an STC.

Well, for all those who have been waiting, the STC. is now approved (1991) - at least for planes with serial numbers 28-1761 and up. Earlier models require extensive modification of the airplane cowling and muffler system.

The STC for later models requires changes to the fuel system. The electric fuel pump is discarded and replaced by two newly designed pumps. Tlie fuel system forward of the firewall must also be rebuilt.

Installation requires that the plane have a 318 inch fuel line from the right fuel tank. The company says the installation takes about four hours.

The price of the kit is $420. including the pumps, plumbing, placards, STCs and instructions.

If your plane has composite floats. they should be replaced with metal floats, although this is not a requirement for the STC. To determine whether your plane has metal floats, check the data plate attached to the carburetor. An " M Fstamped or etched in tlie plate means a metal float has been installed. The company is suggesting delivery dates of from six to eight weeks after placing an order.

For more information contact Petersen Aviation, Route 1, Box 18, Minden, NE 68959 (308-237-9338).

Ammeter Mod For Piper AD

An STC'd ammeter mod meets the requirements of the AD requiring ammeter replacement on many Piper models, according to Electronics International, Inc.

The company reports that some Piper models were inadvertently omitted from the list in the August 1986 AD. Not listed. but included in tlie AD were PA-28-180 models with serial numbers 28-3378 through 28-7505259 and serial number 28-E13.

AD 86-17-01 requires removal of internal-shunted ammeters and replacement with an external-shunted model. The Piper replacement kit. according to Piper customer service, has been back-ordered for several months.

Electronics International manufactures a line of digital volt/amp instruments that have been FAA approved as primary instrument replacements and that comply with this Airworthiness Directive. They provide digital measurement of bus voltage to 1110 of a volt and battery charging and discharging currents to 1/10 of an amp. All units replace a 2 114 inch gauge.

The volt/amp instrument, plus external mounting shunt. sells for $233

For information contact Electronics International, 5289 NE Elam Young Parkway, #G200, Hillsboro. OR 97124-6490 (503) 640-9797.

Some Interior Plastic Available

One of the items we get a lot of requests for are plastic interior parts - you know, those cracked and stained moldings that go around the windows and windshield.

These parts are made of ABS plastic and are one of the first items to begin looking tawdry in the cockpit of your plane.

They are also hard to find. Well, we have a source of some of the parts. It is Kinzie Industries. P O Box 847. Alva, OK 73717 (405) 327-1565 (Fax 405-327-0526).

Kinzie specializes in interior plastic parts. They advertise that their plastic is thicker than original. All of the plastic can be painted, if necessary, to maintain your interior scheme.

What is available? Some examples - for the PA-28 models, windshield top pieces are $28 each while side bows are $30 each. Window posts are $32 while the cover is $37.50 each. Rear window frame is $110 while the center frame is $88.

Window frames are not currently available for the PA-32 models. Tlie center pedestal, however is $80 and the flap handle cover is $45.

This is about all that is available for Pipers at the moment (more is available for Brand C or for helicopters if you have one at home). However, l n z i e has a plan for everyone else, too.

If you need a part which is not offered, and have a fairly representative sample, you can send it to Kinzie to use as a sample for additional tooling (obviously, it would have to be in at least good enough condition to accomplish this.!

Kinzie would theo sell you a new part at a 40 per cent discount (price quotes would be given in advance.)

So for anyone with bad ABS plastic in their interiors (just about everyone), you might want to get the Kinzie catalog. Couldn't hurt.

Some Ideas On Engine Miss

by Torello Tacchi

A member recently wrote about an intermittent miss in his 180. Here are some suggestions.

My 140 Cruiser had a similar dilemma. (Before I go any further - it was not auto gas, it runs better on auto gas.) My Indian has been running well since I rebuilt the engine after spending $2,500 at a local A&P. However, I

noticed I had to reset my throttle more than once while returning from a short hip. This happened more than several times.

Occasionally there was an intermittent miss, but I attributed that to not leaning enough and "loading up" the spark plug.

Well when inspection time came I found the culprit. Before I disclose the problem, I'll also add that I had erratic fuel consumption varying from 7.5 gph to 12 gph.

It turned out the bottom of the carburetor was loose, the bowl dancing around and the gasket nearly destroyed. After dismantling and inspecting the "mixer" (carburetor to you airplane buffs) I also found the float bowl to be too high.

The Al reset the aircraft, but after 75 or so hours passed, another dilemma. This time I went to restart and the left magneto (with impulse) was dead. So I taxied back and parked it.

I thought I had loaded it when it became hard to start, but it was really a dead mag.

So off with the magneto (another FAA approved dinosaur) and found the following. Before I describe the problem, this magneto had to be reset in the last annual and is also the magneto that had been reworked in my $2,500 repair job.

I found two worn Japanese bearings. Not that the Orientals can't build bearings (they couldn't when I raced an Oriental motorcycle - most of its bearings had to be replaced with an American or European equivalent), but that the brand used was by far the cheapest form of *@XX** one could find.

Further, the points, with only some 150 hours, were fried, the little timing gears worn to a frazzle and the impulse coupler at maximum clearance.

I called Slick and asked why the Jap bearing they said Ugg!!! We do not use them.

In any case they explained it would be less expensive if I purchased a rebuilt (factory) from one of their suppliers. I did and saved about $40. So now the miss is gone, throttle setting is constant and auto gas works like a charm

Wants Information On Brake Linings

My partner and I have replaced the brake linings on our PA-28-150. We took the pitted discs to be machined the first time we did it. When we had to repeat the job after only a year, we resolved to look foreither stainless or chrome discs for future installation.

Concluding we had gotten "soft" linings the first time, we bought "hard ones the second time around. But the TBO on those linings didn't seem much better with our chronically rusty discs.

Finally, while our Cherokee was down for its annual we had o w A&P install chrome discs. At that time we learned a vital lesson - that different linings are to he used for different discs.

If we had done the last relining ourselves, very likely we would have used the wrong linings.

I still do not fully understand:

(1) What different kinds of linings are available?

(2) How are they rated: hard or soft? Metalized and non-metalized? Asbestos and non-asbestos?

(3) When is each kind of lining to be used?

Please set us shaight on this missing aspect of lining replacement or tell us where to find the data.

George Till
Portland, OR 97220

The story is that there is only one brake lining available for your plane - sort of. But let me try to clear up the situation involving brake linings today.

A few years ago you purchased brake linings and got either asbestos or metallic linings. If you bought asbestos, you got either heavy duty or regular.

But then, the environmental protection agency decreed that both asbestos and lead would be eliminated from brakes on airplanes as well as cars. The end result - although you had a choice a few years ago, today there is none.

The brake linings you buy today are a composite mixture made without asbestos and, because asbestos is comparatively cheap, the new linings are more expensive.

Also, according to Roger Dixon of Cleveland Brake Division of Parker Hannifin Corp., the new linings require adifferent break in procedure from the old asbestos brakes.

If you fail to break them in properly, you can hang up the idea of getting any life out of the linings and, perhaps, the rotors, too.

Here is how to break in the linings to get maximum wear:

(1) Taxi the aircraft for a distance of 1,500 feet with the engine at 1,700 rpm, applying brake pressure as needed to keep the taxi speed between five and ten mph.

(2) Allow the brakes to cool for 10 to 15 minutes. (Either fly or shut the engine down. Do not run the engine on the ground for that long to avoid overheating.)

(3) Press on the brake pedals and check to see if a high-power run up results in excessive creep. If the plane can be held motionless with normal pressure effort, the linings have broken in satisfactorily.

(4) If the plane cannot be held stationary during a static run up without standing on the brakes, repeat the process until the brakes have broken in.

What you are trying to do is to develop a thin layer of hardened material on the face of the linings, This allows the brake linings to work more effectively and wear more slowly than if there is no hardened surface.

Normal use of the brakes generally creates enough heat to constantly re-glaze the surface. The brakes remain continually broken in.

Unfortunately, some people who try to go lightly on the brakes find that the glaze wears off Their brakes will then lose their effectiveness and they will have to repeat the procedure above to re-glaze their linings.

Got 160 NP Engine in New York

by David Mouckley

I just returned from Sarasota where I left my Cherokee (at Jones Aviation) which I had flown down from Toronto with a brand new 160 hp engine.

I read the letter from Jim Ragazzo and your reply to him. Mine is a PA-28-140 but it was 150 hours away from a major so I took it to Penn Yan Aero, Penn Yan, NY 14527 (315-536-2333).

The people there are most professional; the shop is immaculate and I think they dealt fairly with me. I bought a brand new 160 hp Lycoming, of which they had 140 or so, for $13,000 which included new mounts, etc.

I did not pickup much in cruise, but now it climbs like a rocket and with the 160 hp I'm able to get off my grass strip near Toronto with full tanks (50 gal) and a heavy person sitting beside me on a real hot summer day. I suggest that prospective buyers look at Penn Yan Aero.

One more comment - you were right - it runs on 100 LL fuel ONLY!

Trouble Shooting Oil Temp Gauge

by Rip Sessions

I had occasion to discover a failure with my oil temperature gauge in my 1977 Arrow III. It seems that the original gauge and sensor are no longer being used b~ Piper in new aircraft as the manufacturer discontinued production.

They were in the process of certifying a replacement instrument made by Rochester. Unfortunately the new gauge is different from the old one and requires a change of both sensor and gauge and I'm not sure the gauge is an exact mechanical replacement.

I was able to get around this problem by finding a used unit from National Aircraft salvage (213-426-8309.) They promptly provided an excellent unit which appeared new for a good price.

The trouble shooting of this problem to locate the failure took some doing as these gages can fail (like mine did) in a very weird manner What happens is that one coil gives normal indication at lower temperatures on the ground, but quickly goes to a high reading and shows red line (250 degrees) when actual temperature is about 180 degrees

After much checking of sensor, veri-therm valve and a suspicious low compression cylinder, my advice is to suspect the gauge first in a case like this and substitute a resistor of proper value for the sensor.

Piper provided me with tlie resistance vs temperature data for both type sensors for this purpose and was very helpful in all aspects of support (except replacement gages!).

Tracked Down Charging Fault

by Jack Tedford

The charging system article was, indeed, helpful to me. After a new regulator, pulling the propeller, removing the alternator and then reinstalling everything, my ammeter still remained deflected.

Following the procedures in the article (I am an electrician myself and into electronics) I discovered that when the wire from the suppressor on the alternator was grounded it caused the ammeter needle to deflect. It pegged against the stop on the ammeter gauge.

When the wire was not grounded, the system worked perfectly. Without the article I would have been sold a new meter and no one would have really known the answer as the AME tried to tell me I bent the needle.

I told him he should read the article.

Availability of Isham Mods

Dear Terry,

I noted with vested interest the January issue letter titled "Third-Window & 180 hp Conversions."

The third-window STC, drawings, and instructions are available for $125. Our address should be corrected to 4300 Palos Verdes, Valley Center, KS 67147. (800-899-2707).

Parts are to obtained from the owner's local Piper dealer. Of our STC's sold we have not received any comments on availability of parts - so I am assuming owners have been able to purchase them.

Isham Kits - Manufacturer's Data

	140 & 150	IAC 140-150	180	IAC 180	R-180 R-200	IAC Arrow
Gross weight	2150	2150	2400	2400	2500	2500
Wing Span	30 ft	32 1 ft	30	32.2	30	32.2
Wing Area	160	169	160	169	160	169
Wing loading	13.4	12.72	15	14.2	15.63	14.79
Stabilator Span	10.0	12.83	10	12.83	1066	10.66
Take OK	800	800	720	720	820	820
Over 50-foot	1700	1547	1625	1477	1665	1565
Rate of Climb	660	810	750	900	875	990
Top Speed	142	143	152	155	170	173
71 % cruise	135	137	143	146	162	165
Landing Roll	535	535	725	710	857	872
Over 50-foot	1023	1023	600	600	776	776
Range	780	791	1150	1150	1340	1340
Sink Rate Reduc.	---	27%	--	26.4%	--	27.0%

Isham Aircraft also has STC's available to extend the 30-foot wingspan to 32.32 feet, add the later style wingtips, stabilator extensions, and new style dorsal fin on all PA-28-140, 150, 160 and 180 airplanes.

Also available is an extended wingspan and dorsal fin for the PA-28R-180 and R-200; and the STC for the dorsal fin only on the 140, 150, 160 and 180. The third window STC covers the PA-28-140 through the 235.

I am in the process of amending my STC on the Arrow to update our extended wingspan and wing tip to improve parts availability and reduce the installation costs. I expect this improvement to be available on March of this year.

I am hopeful we will be able to offer he improvements to fixed-gear owners at the same time. I will forward more information as the project nears completion.

Sincerely yours,
Brad Isham
Isham Aucraft
P.O. Box 193
Valley Center, KS 67147

Report On Horton STOL Kit

by Arthur G. Allen

We recently purchased N4898T our second PA-28-180G. This one is a 1972 with a great IFR radio package, autopilot and a 500 hour Mattatuck engine. We improved it with new seats, paint, a Flybuddy loran and of course the upgrade.

1 really wanted the Horton STOL kit. We are not getting a 20 mph approach speed reduction but more like 15 mph. I can drop it in on a short field procedure and stop in 300 feet easily. We can maintain full control at 65 mph (50 knots) on final and maintain a 48 mph (40 knots) slow flight under the right conditions (wind, flaps).

This is maximum effort performance. Under normal operating conditions the aircraft is more stable and safer than my last aircraft without this option.

The kit was installed at Four Star Aviation in Lawrence, Massachusetts, a local FBO with a number of these installations under its belt.

Some think the final product looks a little strange with the "cuff' they install on top of the fuselage attaching to the tail. There is a new leading edge cuff, new wing tips and fins on top and bottom of the wings.

By the way the parts run $800. ($1200. with gap seals), Installation will set you back $700 or so with paint and trim. To me this was a bargain and an investment in peace of mind.

Limitations on 160 hp Conversion

By Alex & Donna Alley

In aviation, as in everything, lady luck sometimes arrives when we least expect it and most need it.

We recently joined CPA and received our first issue in December. In January, we had planned on majoring our Cherokee 140, and until we received this issue with the article "Power Upgrade Woe With 140," had been making plans to upgrade to a 160. What a disaster that would have been.

We called Avco-Lycoming (717-323-6181) and spoke with Bob Ohnmeiss. Bob was very informative and stated that the bottom line is that the later engine, 0-320-E3D, is not strong enough to withstand the higher compression of such a conversion.

This engine (and the following list of engines he gave us) have thin main bearings and are narrow deck engines, which means the flanges on the cylinder heads are narrow.

The following cannot be converted:

A2D E2D
E2G E2H
E3D E3H
IO-320-E2B
AEIO-320-E2B

Anyone upgrading one of these engines ends up with an illegal engine and becomes a testpilot. The cheaper, safer and legal way to go is flap and gap seals for better performance.

The frightening part of all this is that while checking out different A&P/AI's (all were known to be excellent) NONE of them knew this conversion was illegal for this engine.

Unhappy With Owners Manual

John Jennings, of Kansas City, Missouri, complained about the lack of "V" speeds in Piper owners manuals. The answer:

The Piper owners handbooks have come under criticism for years (see following article, also.)

Information is spread throughout the manual rather than grouped conveniently. Also, some data is incomplete, including power and performance figures except for very selected numbers.

I have acquired the V speeds applicable to a number of Piper models and have included them here. The particular V speeds we are talking about are:

Va - design maneuvering speed
Vfe -maximum flap extension speed
Vle - maximum gear extension speed
Vne -never exceed speed
Vno - maximum structural cruising speed
Vs - stalling speed
Vx - speed for best angle of climb
Vy - speed for best rate of climb

The actual figures, for a number of Cherokee models, are shown in the chart below (all figures are in miles per hour):

Unfortunately, the figures shown are calibrated airspeeds. To convert them to indicated airspeeds you will need to consult the airspeed correction chart for your plane. These charts are generally included in the operating manual for your model. You will need to do your own math (you will need to interpolate the correct figures from the correction

chart)

	140	(180) Archer	151	161	235	236
Va -	129	127	124	127	143	143
Vfe -	115	115	125	118	117	117
Vle -	---	---	---	---	---	---
Vne -	171	171	171	184	207	199
Vno -	140	140	140	145	159	158
vs -	64	68	65	58	66	74
Vx -	78	76	76	73	83	84
Vy -	89	85	87	91	100	98

	Arrow 200	Six 300	Saratoga Lance	Saratoga 301
Va -	131	149	152	154
Vfe -	125	149	122	129
Vle -	150	---	148	---
Vne -	214	212	220	227
Vno -	170	168	175	177
Vs -	71	71	65	71
vx -	85	95	100	92
Vy -	95	105	106	103

The correction chart for the Cherokee 140 Cruiser is shown below:

IAS	CAS	IAS	CAS
60	66	110	110
70	75	120	119
80	83	130	128
90	92	140	137
100	101	150	146

Why doesn't Piper eliminate this step and simply give you the indicated airspeeds? Well, as you will note, the correction is based on pitot tube location, but the error changes depending on whether flaps are utilized or not.

For example, at 70 mph indicated, the Calibrated airspeed is actually 75 mph with no flaps, but with 40 degrees of flaps, it becomes 72 mph.

Obviously, if you want to be 100 percent accurate you would need a set of IAS figures to correspond with each set of flap conditions In actuality, we generally learn the figures for non-flap situations and ball park our flying

Your Vacuum Pump

By Teny Lee Rogers

Pilots rarely give much thought to their vacuum pumps -that is until they fail. And fail they do, with predictable regularity.

Although engines are reliable enough that most pilots expect them to achieve or surpass TBO, rarely does the modem dry vacuum pump reach this milestone. Let's examine a vacuum pump and see why

First of all the *dry* vacuum pump is not really a failure of a design - it is, in fact, quite an impressive technological device. It is cheap, simple, light weight, and capable of operating at high rpm for a long period of time.

It has just one major drawback - it has a tendency to fail without giving any warning. This can be quite a problem, especially to a pilot who flies a lot in IFR conditions.

Let'stake alook at the constructionofa dry vacuum pump. Actually, there are two brands of pump which operate pretty much the same, but differ in construction details.

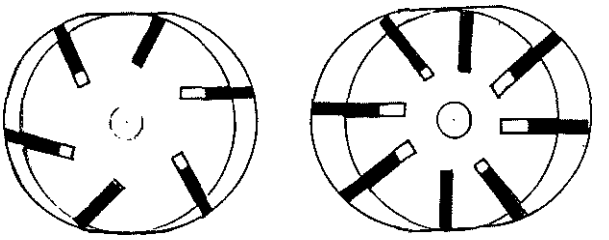

Airborne Pump Sigmatek Pump

One pump, manufactured by Airborne, has a round rotor operating inside an elliptical aluminum housing. The rotor as six vanes, spring loaded, made of carbon, which ride along the surface of the housing and create the vacuum action.

The other pump, manufactured by Sigmatek (formerly Edo-Aire), is similar except it has eight carbon vanes rather than six. The vanes in the Airborne pump are slightly angled (while the Sigmatek vanes point directly to the center of the rotor.)

Both pumps use a "frangible" drive - that is, the drive is designed to shear if the pump locks up. This is to prevent damage to the engine accessory drive in such an event.

Also in both pumps, both the rotors and vanes are made of graphite (carbon). This is part of the inspiration of the design (the graphite not only supplies the sealing qualities necessary in the pump, but also the lubrication.)

Unfortunately, the graphite construction is also one of the weak points of the design - graphite wears out quickly and limits tlie useful life of the pumps.

Why Do Pumps Fail

So what causes pumps to fall There are a number of causes, but let's take a look at the most common ones:

1) Normal wear - remember, we said that graphite tends to wear out under any conditions. How long is that?

Unfortunately, pumps wear out at varying times. And remember, they give no warning before they fail - no gradual decrease in vacuum, no noises or other symptoms.

Generally, the first indication a pilot gets is sluggish gyros which soon just roll over and play dead. This is why pilots spend so much time practicing partial panel flying.

Most overhaulers agree that a vacuum pump, properly installed and operating normally, should be dependable

for between 400 and 600 hours. Beyond that graphite just cannot be expected to last.

2) Rough handling - Pumps are pretty delicate devices and handling in transit may result in a pump which fails shortly after installation. It is not uncommon to find a pump, right out of the box, which is no longer functioning.

Poor handling during installation can also ruin an otherwise good pump. Definitely, a pump must not be dropped and putting the lightweight housing in a vise to install fittings is a definite no no.

In addition, shocks caused by hard landings take their toll. In short, anything which tends to jar or inflict stress on the pump contributes to a short life.

3) Reverse rotation - Remember when we said that Airborne pmnps had a slight angle to the vanes in the rotor - they do not go in and out straight like in the Sigmatek models. Well, this angle gives the Airborne pumps a preferred rotation - they come in clockwise and counterclockwise models and their directions must not be reversed.

This makes it pretty obvious that when installing an Airborne pump, the direction of rotation must be noted and the proper pump style used.

What is not so obvious is the damage that can be caused by inadvertent reversal of the engine. In fact, this is the reason pilots are cautioned about ever pulling an engine through backwards with the prop. It is not the engine which will be damaged, but possibly the vacuum pump.

Also, when starting and shutting down an engine, it only takes one kickback of the engine to trash an Airborne pump. All the pilot can do is to be careful and to try to avoid such a kickback.

4) Contamination - That graphite is just like a sponge - it tends to absorb any solvents, oil or grease. Such contamination drastically lowers the life of the vanes. Oil from the engine or de-greaser, sprayed on the engine in an attempt to clean it, can enter the system and trash the vacuum punip. Obviously, pilots should be on the lookout for any engine leaks and should be exceptionally careful when spraying any solvent on or near the engine. The pump you save may be your own.

5) Misalignment - Unfortunately, the drive pads on many engines are not completely up to specs - there are variations during manufacture. Where this results in misalignment of the drive gears, it is possible to end up with a pmnp which fails at the drive mechanism. Manufacturers are constantly working on improvements to the drive mechanism to try to minimize this problem

6) Foreign material - Any foreign material which enters the system will reduce the life of the vacuum pmnp - often drastically. Some large particles can do in a pump quickly. It is possible for some vacuum hoses to be so brittle that pieces break off internally. These pieces can kill a vacuum pmnp immediately.

Even carbon pieces from the former vacuum pump can be killers.

Any dust or other contamination can quickly trash a pmnp. This is why new filters are required in an installation unless the pump warranty is to be voided.

However, even with a new filter, a plane owner is not in the clear. Particles so small they pass through the filter can cause damage. This is why cigarette smoke is considered such a problem. Not only does it enter the pump, but it is absorbed in the vanes, contributing to their wear.

7) Excessive Engine Speed - Running your engine over redline will quickly eliminate your vacuum pump. Airborne pumps are designed to operate at no more than 4,000 rpm, while Sigmatek pumps have a design limit of 4,200 rpm. But don't think you don't have to worry if your engines do not hit these speeds. The engine pads on Continental engines generally run at about 1.5 times engine speed, while the pads on Lycomings turn at about 1.3 times engine speed.

For longest life, pumps are designed to last longest at engine speeds of approximately 2,000 rpm.

8) High altitudes - When a pump operates at a higher altitude, it has to work harder. This means more heat is generated and heat is one of the biggest killers of dry vacuum pumps. Unfortunately, at higher altitudes the humidity is lower and cooling is not as great. A vacuum pump puts out nearly as much heat as a turbocharger and generally vacuum pumps are not located in areas conducive to good cooling.

9) Rapid acceleration - Quick throttle bursts put a greater load on the vacuum pump and can result in premature demise. Be especially alert to this problem during go-arounds and during normal acceleration on the runway. This is one of the reasons some engines are placarded to read "two seconds from idle to full throttle."

Choices After **Failure**

When a pump fails, an owner has several options, some of which are better than others.

One which is not recommended is the purchase of a "rebuilding kit' available from many aviation suppliers. These kits are FAA approved, but still not a good idea for most pilots.

First of all, unless you know why your pmnp died and the condition of its internal parts, you have no way to know whether your pump is at all re-buildable in the first place. A scored housing or damaged rotor will render aunit 100% trash and you are wasting time and money trying to rebuild it.

Also, vacuum pwnps are built to close tolerances - they are not something to mess with by someone without a lot of special expertise.

Another option, which is a lot more viable, is to purchase an overhauled pump from a reliable re-builder. By doing so, you will receive a unit with a 400 hour warranty for roughly half what you would pay for a new unit (new units run about $800 for a 400 series Airborne and about $300 for a 200 series Airborne through many mail-order houses in Trade-A-Plane.)

And finally, of course, you can purchase a new

pump. Remember to check prices for pumps in several suppliers in Trade-A-Plane. Sometimes the price for a new pump is so low that it would be foolish to try to save a small amount by buying rebuilt.

Incidentally, as to doing rebuilding in the field, there is one small exception to this for Airborne operators. Airborne specifies a life limit of six years for their couplings. Kits are available to replace the couplings. Kit No. 350 fits 211 and 212 series pumps, while Kit No. 352 fits 440 series pumps.

There are some definite dos and don'ts in replacing vacuum pumps.

1) Be sure to troubleshoot the cause of failure of the old pump. Simply slapping in a new pump may well be an expensive exercise if your pump failure was caused by outside forces. Be sure to check hoses for signs of deterioration - a tittle bit of hose material sucked into the new pump will trash it, too. Check the system for any signs of blockage. Look at the old pump and check for signs of oil wetness, indicating an oil leak

2) Verify part numbers and make sure that, if your pump is an Airborne, you use a CW pump where rotation is clockwise, and a CC pump if rotation is counterclockwise.

3) Be sure your replace all filters. Not only will failure to do so void your warranty, but you will be guaranteed a failure if old filters pass dust and debris.

4) When attaching fittings to the pump be sure you do not put the pump body in a vise. It is generally o-k to put the base in a vise, but never the body.

5) Check the drive pad for oil. There should be none. Otherwise, leakage into the new pump could mean a quick demise.

6) Replace any brittle hoses. Also, avoid using any Teflon tape or thread lubes. This stuff is just waiting to get into the lines and to destroy your new pump.

7) Remember to save your old pump. It has salvage value to a re-builder even if it is damaged.

Lousy Landing Bulb Life

By Bob Pursell

The GE 4509 sealed beam landing light used in our airplanes bums out very quickly, but it really isn't the light's fault. It is designed to bum out quickly!

The design life (the amount of time it will last if turned on and left on) is only 30 hours. Most lights have a design life of around 700 hours and up. The short life of the 4509 allows the filament to burn at a literally suicidal level of brightness for its 100 watt power draw.

In the high vibration environment of a light airplane the landing light (and all other lights, for that matter) bums out well before the design life (which is based on optimum conditions.)

In the "old days" the short service life was not a problem. Landing lights were used only for takeoff and landing (and some taxi time at night, maybe.) The total bum time on the average light aircraft landing light was only minutes a year.

Times have changed but the 4509 light has not. Now many pilots (including me) use their landing light for collision avoidance purposes during most or all of every flight. Towers routinely ask you to "show a light" to help them find you.

Like most newer aircraft our landing light is mounted in the high-vibration cowling nose bowl instead of on the wing leading edge. Landing light use and abuse has skyrocketed and so has the frequency of bulb replacement.

Many suggestions (such as remounting the light with the filament vertical, putting a resistor in the power line and so on) have been made to extend the life of the 4509 landing light. Here is my suggestion - use a different light. There are two good choices.

I use a GE 4595 sealed beam bulb. It is an exact physical substitute for the 4509. The only differences are that it puts out somewhat less light in exchange for its 100 watt power draw and has a 300 hour design life. Any loss of light output (I cannot tell the difference in the real world) is well worth it to me because of the increased reliability.

The 4509 retails for about $15, the 4595 at about $30. You can get them through the mail order discount houses (Chief Aircraft, 800-447-3408 or San-Val, 800-423-3281 to name two I've dealt with happily) for about $10 and $14 respectively. These places are a great source of other common parts at good prices, by the way.

Another individual, Bill McKay uses a Wagner Lighting Products H7604-12V halogen sealed beam. It can he ordered through most large auto parts stores for about $16. It is also a direct physical replacement for the 4509 and has a 100 watt power draw.

Like all halogen lights it produces a lot of intense white light and runs at very hot temperatures. I to not know its design life, but halogens are generally very long-lived. Bill has not had any heat problems, but be uses his landing light for only brief time periods.

1 am nervous about using the Wagner unit since it runs so hot. The intense white light would be nice, hut the potential for heat buildup has me worried because 1 run my landing light full time for collision avoidance.

I am no expert, but that is what I have learned. Try one or the other if you like, hut be careful of the operating temperature of the halogen bulb if you try it. By all means, if you find something better, let us know.

Some Arrow Gear Information

By Gary Dykstra

I had a problem with the "Gear In Transit" light coming on in flight. My mechanic's idea, initially, was to adjust the main gear. He felt it might be sagging and then getting pulled down by the airstream. Unfortunately, that did not solve the problem.

I felt that the problem was electrical vs hydraulic, because I could see that the pump was tuming off after the gear was retracted via the drop in current draw.

Upon close examination of the electrical schematic of the landing gear circuits, I found that the "Gear In Transit" light had nothing to do with the hydraulic motor being on as you might expect, but rather, will remain lit as long as any one of the landing gear is between down and locked and fully retracted.

This is accomplished through micro-switches located at each wheel. In my particular case, I found that the actuating arm on the nose wheel upper limit switch was broken.

Determining Best Economy Speed

By H.C. "Skip" Smith

The speed for most miles per gallon, or best range, has long been known. It is simply the speed for lowest drag, or, stated another way, the maximum LID speed.

Glider pilots are very well aware of this speed. It gives the greatest distance with or without power. Although it is never mentioned in conjunction with cruise performance for airplanes, a speed is often specified in the POH for glide performance. While it is not required by the FAA to be specifically determined, we can assume that this value would be the best glide speed, the same as maximum range speed.

Silver approached the determination of this speed by information that is given in the handbooks, namely fuel consumption at various conditions. The max LID speed (as I like to refer to it) is quite simply defined mathematically in an equation that involves four variables: weight, wingspan, wing area, parasitic drag coefficient, and the span efficiency factor.

Unfortunately, these last two parameters are considered engineering data, and are not readily available. In fact, such information is often hard to determine accurately.

However, drag coefficient can be approximated from handbook speed-power performance data, with some assumptions. The process is a bit technical, so I won't go into details.

Also, the span efficiency can be estimated fairly accurately for various wing configurations. Using this method, I calculated the max LID speed for the Cherokee models on which I had information available. The results were as follows. I then coinpared these to the glide speed (assumed best) listed in the POH. Results are as follows:

Model	VmaxL/D	Vglide	Vy
140	81	72	74
180(65-72)	87	- -	74
Warrior II	77	73	79
Archer II	81	76	76
Arrow II	93	91	96
Arrow I11	89	79	90

* All speeds in knots.

I also listed the best rate-of-climb speeds given in the POH. Silver class max LID speeds are about 20 %higher than these, the method which you used to calculate the max LID speeds, or best economy, as you call them. Note that the speeds that I have calculated by Silver. I am sure that there are slight errors in both methods.

However, my figures show that they are very close to being the same as best rate-of-climb speeds, except for the early 140 and 180 models. Note that these speeds also differ from the glide speeds given in the handbooks.

The exact speed is very elusive, but there is a ball park range. I would say that, if best glide speed is given, use it. If not, use the best rate-of-climb speed. In any case, the speed given is for maximum gross weight; at lower weights, the speed would be even lower.

I have always maintained that flying at such economy speeds is primarily academic, since they are very slow. Most of us fly to get somewhere in a hurry; making the whole trip at best rate-of-climb speed is somewhat frustrating and seems to defeat the capability of the airplane.

However, if saving fuel is a primary concern, flying close to the speed will work. You can think of it as a lower boundary on speed. Flying any slower would waste fuel and speed. Flying slightly higher would mean a few less miles per gallon, but more speed.

I would also be concerned about possible detrimental effects to the engine for prolonged operation at the low power settings associated with these speeds. Saving a few dollars on fuel does not justify a few thousand on engine overhaul.

Constant Speed Propeller Talk

By Edward Lucas

Many questions have been asked concerning a constant-speed propeller conversion for a Cherokee PA-28-180C with fixed gear.

I own a 1965 PA-28-180C Cherokee which had a Lycoming re-manufactured engine (0-360-A3A) installed in 1978. I became interested in a constant-speed prop, so I wrote to Piper and was told that Pacific Propellers, Inc. of Kent, Washington had a STC SA-2213WE for installing a Hartzell HC-C2YK1-8/766A-0 propeller. (P O. Box 1187, Kent WA 98035, 206-872-7767, 800-722-7767.)

Lycoining told me that my engine, 0-360-A3A, has the crank case and shaft already machined for a constant-speed propeller, and the conversion must comply with Lycoming Service Instruction 1098C. This conversion changes the engine to a 0-360-A1A and would require a name plate change.

November 1979 I purchased the STC, SA 2213WE, from Pacific Propeller and they sent instructions and all items needed for the conversion. The propeller and spinner were shipped from Hartzell.

The kit consisted of a Woodard Governor, and drive adaptor, crankshaft flange bushings, bracket for control cable, manifold pressure gauge, prop and spinner.

Upon completion of the conversion the performance was greatly improved in climb, airspeed and fuel consump-

tion. Airspeed went to about 143 mph indicated at altitude using eight to nine gallons per hour.

The caution area on the rpm indicator was changed to avoid continuous operation between 2,000 and 2,250 rpm. Piper sent a fuel and power chart for the Lycoming 0-360-A series engine. The chart gave settings for 55, 65 and 75% power. I might add that at 23" HG and 2,400 rpm, I have never reached 75% power - usually 68-70% power and 143 mph indicated.

I flew this plane for about ten years until early 1989 when an STC for three-blade propeller was out for Arrow and Mooney conversions. I became interested and purchased a Hartzell three-blade propeller, HC-C3YR-IRF/F7282, and spinner through Craner Rich Conversion in Long Beach, California. They have STC SA 4528NM for an Arrow Conversion.

In January, 1990 I received a one-time field approval for N7952W to install the Hartzell three-blade propeller. The installation has removed the rpm restriction, it has less vibration and is much more quiet.

The only restriction is to avoid continuous operation below 15" HG between 1,950 and 2,350 rpm. The conversion added 13 pounds to the empty weight.

By myself I can cruise at 4,500 Feet, 22" HG, 2,400 rpm with 153 mpb and 7.5 to 8 gallons per hour. It's a fantastic machine and it's the only fixed-gear Cherokee with a three-blade prop that I know of. The prop and engine were checked for balance and vibration, and the reading indicated .075 IPS, which is excellent for a reciprocating engine I have a good combination

I agree the prop conversions are expensive, but I wanted mine and I'm very satisfied with my Piper Cherokee.

Glareshield, Flaps & Bulb Tool

By Alan Skidmore

I own a 1980 Warrior II along with Clovis Ray. We are based at Ona Airport in Milton, WV.

We have had this airplane for more than two years now and by doing our own maintenance we have learned a few things that might be helpful to other owners.

First, the glare shield was faded badly and caused a lot of problems on sunny days. After reading through several back issues of POM for suggestions, our only hope seemed to be replace the material which meant removing the windshield. Not wishing to go that far, I decided to try and dye the material.

The material itself was in good shape. So I got a package of RIT dye (Black of course), a one-inch foam paint brush and a lot of rags.

After mixing the dye with hot water I brushed the dye onto the glare shield fabric. The results were excellent. You can even get into the tight side comers if you're careful witb the foam brush.

The dye will wipe right off of the windshield and center post while it is still wet, but, it will stain your fabric upholstery, so be careful. The whole process cost about $2 and one hour of time, plus it looks factory new. It is much easier than removing the windshield.

Second, If you have had problems with the flap handle slipping out of your hand during a go around you need to replace the grip with a bicycle type foam grip which can be purchased at K-Mart or a bike Shop for about $5.

Just slip the old handle off, put a little RTV on the metal shaft to bold the grip, and slip the new foam grip hack on and let the RTV set up. It won't slip and looks better too.

Third, if you are an instrument student doing partial panel work, you need something to cover up the inoperative instruments.

The old-style suction cup soap holders will do the trick. They are three inches in diameter and have lots of little suction cups on them to keep it anchored. I had a set of Sporty's Covers but they never would stay in place.

You can find these soap holders at Hill's Department Store. They cost about a dollar.

Finally, If you have ever tried to change the light bulbs in your panel only to have them break while trying to get them out or not go back in correctly because you can barely get your fingers around the bulb and into the socket hole, here is the solution.

Go to your local industrial electrical supply house and ask for a lamp removal tool. They are a small rubber device that fits over the bulb. Cost is about $5.

Worried About A/C Belts

R. C. Thompson, of Easton, Maryland, complained that his air conditioned Cherokee continually wore out alternator belts. The answer:

Where a plane has a chronic problem with the air conditioning belts, the problem nearly always amounts to the same thing - worn pulleys.

The system is designed so that the helt is supposed to be supported on the sides - along the sides of the V - the V portion of the pulley. When operating correctly, the tip of the V of the belt should he suspended and not actually touching the bottom of the pulley groove.

What happens in practice is that the pulleys wear and the sides tend to erode. When enough metal has disappeared the sides are no longer close enough to properly support the belt. As a result, the helt tends to ride the pulley in such a way that it is now supported, not by the sides, but by the bottom of the groove in the pulley.

The helt can now flex back and forth between the lands of the pulley. The wobble which results can cause the belt to completely turn over and, this will lead to rapid failure.

Of course, this analysis asswnes that the system has proper tension on the belt at the time of installation. If the belt is loose to start with you can also expect premature fail-

ure of the belt.

One final tip, as recently mentioned by another owner of an air conditioned Piper, one good idea is to store a spare belt behind the propeller. That way, in case of failure, the propeller will not have to be removed to install the new belt.

Major Problems From Valve Springs

By Robert A. Quallich

I purchased a PA-28-235 horsepower Cherokee with 47 hours since major overhaul. It had 2,047 hours total time.

After 204 hours, at the annual, I was told there was excessive metal in the oil filter. The engine was disassembled and was found to have the cam lobes and lifters severely worn, but only on certain cylinders. The engine had a new cam and lifters installed at that time along with new piston rings and new bearings.

Please note that the cylinders were not disassembled. I flew the aircraft another 170 hours and again found excess metal in the oil. A cylinder was removed by mechanic. Upon inspection, he again found worn cam lobes and lifters.

I took the engine to another reputable mechanic and, upon his inspection, he disassembled the cylinders and found the valve springs too large for the seat. The springs therefore would sit on top of the seat trying to hammer themselves in and causing excessive pressure on the cam and lifters, causing premature cam and lifter failure.

The older versions of the 0-540 have smaller valve seat pockets and smaller valve springs than current versions and I have been told that the same condition applies to both the 0-320 and 0-360 engines.

The problem is that Lycoming has gone to larger diameter springs, but, to my knowledge, has never issued a bulletin to the mechanics. If you need spring replacement in your engine in its original condition, the LW 800 springs will NOT fit unless the mechanic dishes out the seat to accept the larger springs.

The mechanic that found the problem in my engine claims he has had 13 other engines with springs which did not fit in his shop alone and he has one there right now. We called the FAA when my engine was down and apart and they refused to come down and see the problem. After all, no one had crashed or died, had they?

The mechanic that found this problem dishes out the valve seat to accept the larger than original springs, contrary to any instruction available from Lycoming. My mechanic removed one original cylinder as evidence and can show anyone that the old springs fit. The new springs - the only ones available - do not.

Let me state that if your engine has beenoverhauled and they did not change the springs, you are probably all right. But if you have any new springs on the parts list, I would be concerned as to how they were installed.

Theft Proofing & Other Tips

By Ralph D. Loewinger

For those owners who don't know, it is a piece of cake to get into a Cherokee with little more than your bare hands.

Anyone with a pliers, screw driver or knife can take the cotter pins out of the door hinge, push out the hinge pin, grasp the door, pull it slightly forward to release the catch from the latch, replace the pins in the open door and look like a busy owner.

I made a hinge lock plate that is "S" shaped when viewed from above and is screwed to the holes on the forward side of the latch lever. As the door closes, this plate just clears the wall by the copilot's right knee and prevents the door front from being pulled outward at the hinged edge.

I then placed a decal nearby stating "hinge lock installed and replaced the Piper lock with a Medico lock. Now at least they have to punch out the window and climb in.

I also stopped my bird from leaking by applying a silicon clear bead on the outside of the side windows, but the big leak was found when I removed the windshields. This is an easy job if you are prepared with the foam tape used in sealing the edges and a wide flexible tape for replacing the bottom one which you will find shriveled and full of holes for water to seep onto your avionics and no longer covering the huge hole at the corner.

This is the place you always see condensation after each rain. The vertical tape goes on after the horizontal tape to seal best.

While the glass was out I swept away all the dead bugs and re-dyed the sun bleached dash cover with a vinyl dye kit from the auto parts store. It is a coal tar derivative. water soluble while wet, and dries dead flat in three minutes.

Don't use the clear gloss that is included. This is the same stuff as driveway black top and dyes everything it touches after cleaning with a detergent (comes with kit).

After replacing the moldings, I filled the cavity with clear silicon, masking off the glass with tape and removing the tape right away. I took the same sealer and applied it to each wire bundle and pipe that ran through the fire wall as well as the door handle seam. Now, we be dry as a pretzel belch!

I had trouble replacing the old rusted screws on the dummy plate at the top of the tail and the center strip of the windshield with new stainless screws. Some of the screw heads shipped.

I took speed tape (aluminum foil tape) and placed it over the glass, with a frame-less hacksaw handle I cut a slot in the screw head, took a blade screw driver and worked it both ways until loose and got all of them out perfectly.

I also removed both wing tanks and found the source of the fuel odor in the cabin. The hoses were old, brittle and unfit, but the real stink came from the vent lines which have a rubber section which Piper connected with

some junk like wiper hose.

All fuel fumes were venting into the wing and thus the cabin. We installed quality fuel line and stainless screw clamps to the vent lines. We also replaced the tank gauge gaskets which were seeping.

More On Arrow Gear Problems

A couple of issues back we invited Arrow owners to share information about gear retraction problems and cures. Well, here is a two-for-one special for you.

Ron Lawson, of Davenport, Iowa, had an irritating problem with his Arrow III which cost a bit of money and time to troubleshoot. When the gear was retracted, the gear did not come all the way up - it would actually come up and then fall part way back.

Ron spent three weeks looking for the problem and replaced a number of parts before finding the real culprit. The diaphragm was incorrectly adjusted.

At high airspeeds the diaphragm was pushing the shuttle valve too far causing a leak - the fluid was leaking back into the reservoir. The pump could then not supply enough fluid to raise the gear all the way.

With that problem cured, all seemed well for six months when another problem developed. At cruise, the gear system would suddenly activate and the gear deploy,

This problem turned out to be a bug which entered the pitot head and then died. The corpse would apparently move around and occasionally block the pitot opening. This would give the gear system a reading of zero relative wind and, presto, the gear would deploy.

The problem came to light only after the mechanic blew the system out.

Update: Lycoming Valve Spring Problem

Last month we reported on a problem involving Lycoming valve springs reported by Robert A. Qualich. Well here is an update.

Mr. Qualich had a problem in that the cam and lifters were wearing even after overhaul. It was almost like he had one of the infamous 0-320-H engines in his plane - one of Cessna's worst.

Mr. Qualich complained that the older 0-320 and 0-360 engines had valve spring seats which were too narrow for the valve springs being supplied for overhaul now. According to Mr. Qualich, he was right. He has now been contacted by the FAA and told that the problem does exist -many engines have seats which do not match the current production of valve springs.

As aresult, Service Bulletin 1240 is being revised to call for machining the valve seats on these engines to 1.690 inches. Look for the new service bulletin within a couple of months.

Vent Seal Spring & Power Loss Solution

Here are a couple of potential solutions for problems raised by members.

In the June issue Jim Ragazzo was concerned about occasional power loss on takeoff. Another member says be sure and check the muffler for a loose baffle. The same situation occurred with him and a loose baffle was found. It would move around and when it would cover the exhaust port, it would kill the engine. The mechanics had a difficult time finding the problem despite the fact that it occurs regularly in the field.

In the same issue, Calvin Reeves asked about a wire spring for his vent door. These are impossible to find. One member suggests making them from spring wire. Simply go to a model airplane shop and ask for a piece of 3132 piano wire. Hobyists use it to make landing gear for model planes. The wire can be cut with an abrasive wheel and bent to proper shape with a pliers.

Has Info On German C/S Propeller

by Bernhard Wolf

Several months ago I asked about a constant speed-prop conversion for my 1983 Archer II. At that time none was available since the engine has a solid crankshaft, therefore no oil pressure for a conventional prop governor is available.

A solution for this problem has been found now, however. Muehlbauer Propeller in Germany has developed a four-blade constant-speed prop for the Archer, which is one of the most popular airplanes in Germany.

This prop has an electric governor, thereby eliminating the need for oil supply. The modification has already been approved by the LBA (the German equivalent of the FAA). I was told the company is currently seeking FAA-approval for this prop.

I am confident they will get it, since they already have experience in the US market: an example is the "Speed Canard", a two-place composite pusher airplane which is FAA-certified and flies with a Muehlbaur prop.

The new prop for the Archer supposedly not only improves performance significantly, but also makes the plane much more quiet (I was told about 4 dB). It was mainly developed out of a need for quieter airplanes due to tougher German anti-noise-laws.

1 was told the conversion should be in the vicinity of $10,000. In July I will ferry my airplane back to Germany. Then I will install this prop and I will report you my experiences.

Hopefully they will also have FAA approval by then. By the way, This prop uses a newly developed spinner and backplate, which are included. It therefore could also be the end of all spinner woes.

If you want more information, here is the address of the company:

MT-Propeller Gerd Muehlbauer GmbH
Flugplatz Straubing-Wallmuehle
D-8441 Atting
Germany

Fuel Gauges Highly Inaccurate

Kenneth Wilson, of Salt Lake City, Utah, complained that his fuel gauges were way off. The answer:

Yes, it does sound like your gauges are a little less reliable than I would prefer if I were to have to depend on them. However, before you decide what you need to do, it is important to determine whether the gauges or the sending units are at fault.

One way to do so is to substitute a known good sending unit across the gauges and see what type of readings you get. Unfortunately, few people have an extra sending unit available.

You indicate that both gauges are reading incorrectly at empty, but with different magnitude errors. Therefore, by crossing the connections - connecting the left wires to the right gauge and vice versa- you can determine whether the gauges or the sending units are at fault. If the error changes gauges, the problem is in the sending units. If it does not, the gauges are at fault.

The quantity transmitters must be removed from the tanks to work on them and the tanks must be removed from the plane for this operation. The only adjustment of the senders involves bending the arm on the float to get correct position. This operation is done using a special jig, as specified in the maintenance manual.

To determine whether the sending unit is working properly internally, you need to check resistance at both full and empty positions and also check for dead spots during arm travel by using an ohmmeter. Resistance for the metal float sender (P/N 62037-00) should range from 0 to 31.3 ohms. Resistance for the rubber float sender (PIN 68101-00) should range from 0 to 4.5 ohms.)

Obviously, if the units fail the ohmmeter test, they need to be rebuilt. Talk with Al Snyder of Skycraft (215-493-1875) or the folks at Air Parts of Lock Haven (800-772-3117 or 800-443-3117) for more information about rebuilding. Sorry -there are no new units available - yours must be rebuilt.

Now that we have talked about the gloom and doom ofrebuilding parts, please check one more thing before you do so. Both gauges read high at empty. At empty, the fuel gauge transmitter has 0 ohms. It is possible that additional resistance in the circuit can be causing your problem. This could come from a bad ground at the fuel tank sending unit or (more likely) behind the panel at the fuel gauges. Check this first. If you find a bad ground, you will not only solve your problem you will save a ton of money, too.

Turbo Saratoga Exhaust Cure

As most owners of Turbo Saratogas and Turbo Lances are well aware, the planes have recently been plagued by problems caused by a poor joint in the exhaust system.

Now Lycoming may have come up with a cure which works.

Lycoming Service Bulletin No. 499 details the new cure which involves installation of a new one-piece exhaust pipe assembly. The new unit, PIN 40B21375, replaces both P/N LW-15809 and LW-15811. The list price is $475.

This is the second "fix" for the problem. Lycoming's first try was to simply design an "improved coupling, but this did not work much better than the original design.

The new design is important to owners of these aircraft in that the original exhaust system design has been implicated in several in-flight fires.

Praises New Engine High Performance

By Bob Axsom

In my last letter I reported that my mechanic had removed the engine and shipped it to High Performance Aircraft Engines & Components in Mena, Arkansas. That company stood by the price they had quoted me during the previous year. That price did not cover components that do not normally have to be replaced such as the cam which my mechanic found to be defective prior to shipping the engine.

The defective items were detected, reported and my authorization was obtained before proceeding with the replacement. The defective parts were returned to me with the engine (I plan to make a lamp out of the camshaft.)

The following items were replaced at extra charge: tach shaft, fuel pump drive gear, camshaft, starter adaptor ring, cylinder drain line, inner cylinder baffle, primer line, oil pump body and vacuum pump. The extra charge was $1,543.43 and the total came to $13,070.17.

While the engine was rebuilt I had the propeller sent to a prop shop for service and rebalancing Bad news - the prop had been filed down so many times to remove nicks that it was below spec and could not be returned to service. We had our choice of a new Black Mac (available immediately) or a Sensenich which would have to be special ordered (several week delay).

I was told the Black Mac is a little lighter, slightly cheaper, same diameter and pitch, with essentially the same performance. I decided to wait for a brand new Sensenich because I have too much money in this change to bring in another variable which does not offer a performance improvement.

I was told by the company to expect the airplane to be down for 5 1/2 weeks. It turned out to be approximately two months.

When the engine came back it was quite an attraction. Several pilots who read the previous letter in the POM

called and made special trips to look at it. The crankcase is painted metallic blue, the cylinders are painted black and everything else is chrome plated. It looked like one of the beauties we saw in hot rods of the fifties.

This is High Performance Aircraft Engine's standard finish. With the engine were check and break-in instructions. One of the things they stressed was checking for oil leaks.

After the initial short test run a seeping oil leak was found around an accessory plug at the forward end of the right crankcase half My Mechanic removed the plug, coated the threads with sealer, and reinstalled it. This fixed the leak and no others were found.

The test flight and break-in instructions are simple, but very specific and the consequences of not following them is stressed. On the second flight I was totally focused on compliance out over the ocean a mile or two from Catalina Island. All of a sudden the engine started to die. As I was considering my chances of making the airport, preparing to declare an emergency, turning on the fuel pump and switching tanks, the engine suddenly came to life. I was so busy concentrating on the break-in procedure I had run a tank dry.

High Performance requires that you change the oil and filter between 10 and 15 hours of operation. My checks showed the fuel consumption was a hit high and it seemed to he getting worse. The fuel system was checked while the airplane was down for the oil change. He found that the engine fuel pump was leaking. We notified Al Hadaway at High Performance and he located a pump and had it in our hands the next day!

The engine seemed very tight at first, but after about 50 hours it is running smooth and strong. Oil consumption has settled down to almost zero.

I would not have expected the airplane to cruise any faster - after all, a given propeller turning at a given speed produces a given amount of thrust. However, the airplane is cruising faster and I have to attribute it to the new propeller with its wider chord and different airfoil.

What 1 did expect to see is an increase in rate-of-climb. I have not been disappointed.

Has Engine Swap STC for Warrior

1 note that many members are interested in swapping engines to achieve more power and more performance. I have received an STC from the FAA to install a Lycoming 180 horsepower A4A or A4M engine in the Piper Warrior.

We call it the Arch-Warrior. This aircraft will outclimb and outrun the Archer 181. A delightful plane to fly.

Drawings and an STC are provided. Some welding and sheet metal work are required for modification of standard Warrior and Archer parts.

Thismodification can be accomplished by an A&P mechanic in little more time than an engine change with the final return to service by an FAA form #337 signed off by an IA.

Sincerely yours,
Walter C. Sykes, A&P
905 N. Swinton Ave.
Delray Beach, FL 33444
(407) 278-1964

Automotive Parts As Replacements

I believe I can offer some help to Charlie Waldrop in finding an alternator belt for an air conditioned Wamor.

As you know, Gates Rubber Co. will no longer offer any products for airplanes. They do still manufacture the belts, however they must he bought from non-aviation suppliers and you know the non-aviation part numbers. I have an air conditioned Cherokee 180 which uses a Piper alternator belt #452-572 (PS10069-1-1) and a Piper air conditioning belt#452-573 (PS10069-1-2). The corresponding Gates numbers are belt #7M 1030 and product #8903-1030 for the alternator and belt #11M 1060 and product #8904-1060 for the air conditioning compressor.

Although these are not legal replacements (i.e. they do not have Piper's blessings and they cost about as much as their aviation equivalents), they are absolutely identical to the Piper belts and do have the major advantage of being available.

To order the belts, one can try auto parts stores, Western Auto stores, or can call Gates in Denver Colorado to find the location of their nearest distributor. If all else fails, you can send me the name and number of the person needing the belt as I have bought several to stock up. Of course anyone using one of these belts will he using it for farm use on tractors and not for aviation.

On another subject, I recently had my alternator go out on a recent flight in IMC. Luckily I noticed the problem right away due to the sudden disappearance of the background whine in my headsets and made an uneventful landing on battery power.

After having the alternator repaired (the diodes were blown), I had another failure in VMC. This time it was the voltage regulator. 1 called all over the country trying to find a replacement for the Prestolite regulator (old part # 68804-03, new #484-182). None were available. I finally did find an aviation supplier that had an overhauled Electrosystems Part #VR200 regulator that is a replacement for $85.

This has been installed and works perfectly. I have since found at an auto parts store a Wells VR706 (old style Chrysler regulators) which appears identical for $9. I am not sure if it is exact replacement, but you bet that I will he carrying it as a spare to use in a pinch since the aviation regulators are becoming rarer than hen's teeth.

One last item concerns landing lights. After reading about it in a past issue of POM, I had an auto parts store order for me several Wagner H7604 12 volt halogen sealed beam lights. They fit exactly the same as the old landing light, are brighter, last longer and draw the same 100W. As for your concern about greater heat generation, I do not feel that this should be much of a problem, since the light is

situated behind the prop which should act as a rather large cooling fan.

(Name Witheld)

Gear Retraction Glitch Uncovered

By John L. Brown

On a recent takeoff my gear did not retract when I cycled the switch. I checkedmy breakers and tried the switch again. Nothing happened.

I thought my airspeed was too slow so I continued the pattern and saw my speed increase to what should have let the gear come up. It didn't.

I wanted to try the override up, but I thought if I had a problem I would rather have it down and locked than up. I asked for a visual to confirm I was down and locked. Although 1 had three green lights, I began to doubt the system. I landed without incident and went to my mechanic.

He checked several things first - fluid, hoses, etc. Everything looked okay. He did a retract test and got under the back seat to the diaphragm. To our surprise it looked like green garden hose going from the outside ram air pitot vent that works the emergency gear down. The diaphragm would not cycle so the mechanic, Charles Farmer, disconnected something and up went the gear.

After a closer check the diaphragm was okay, so we thought the green garden hose had collapsed under the heat, but it was fine. On to the gear pitot.

At first inspection, it looked fine. It's hard to believe, but I always check it. Charles looked close and saw some residue - so off it came. Mud dobbers had gone in and built a nest on the inside piece of the ram air system. A careful cleaning followed and we are back on line.

I bought a pitot cover for the airspeed and tried it on the ram air vent but it wouldn't fit. So 1 took the vent down to our local shoe shop and Mr. Chadwell made a perfect cover in no time at all...and cheaper than the pitot cover.

Fuel Tank Fault In Older Plane

By Victor Filosa

Recently I purchased a 1966 Cherokee 140, 471 TTAE. The plane is pristine in and out.

However, aprobleni was discovered rather quickly in my bird. I purchased a Petersen STC for auto fuel, had it installed by my FBO repair shop and went on my way.

A few days before installing the STC, I filled the bird with AVGAS and went on a vacation by car, when I returned, I had several phone messages to go to the airport and correct a SERIOUS LEAK.

It seems that filling the tanks to above half tanks produced two leaking gas tanks. My FBO repair station diagnosed cracked and brittle rubber connector hoses in my overflow system.

The parts were $1.00 each tank, but it cost $300.00 in labor to get the tanks off and replace brittle leaking hoses. The hoses were replaced and the tanks filled with autogas to check for leaks in the repairs. No leaks appeared, but two days later, the tanks still out and filled with autogas, the entire seam sections of both my tanks were leaking severely.

I called Skycraft and spoke to Al Snyder. It seems that Piper was using a sealant (pinkish in color) that was only gas resistant to seal the seams, and then sloshed with another sealant to protect it from attacking the sealant.

This Pinkish sealant was used up until 1968. Piper then switched over to totally different sealant which is impervious to ALL gases including autogas.

So fair and urgent warning to all Cherokee owners who are thinking about auto gas for their birds. Check your tanks by looking in on a sunny day or with a flashlight to see if you have the dark sealant or the pinkish sealant.

It will cost you $675.00 plus painting and shipping to have them resealed by Skycraft. Don't take any chances, have them overhauled quickly with the new impervious sealant.

Also, what caused my tanks to leak was traces of alcohol in my unleaded auto fuel. Yes I said traces of alcohol in them, but not enough for the government to force gas companies to list it as having alcohol in their gases. The amount is very small. But that small amount attacked my tanks like you wouldn't believe.

While your tanks are off, replace those dry and brittle overflow connector hoses in each tank -there are two connectors in each tank. And remember to replace your tank screws (stainless) when you have completed your repairs and or your resealing job. D & D Screw Co. of Hampton, New Hampshire (800-468-8000) is the cheapest for the screw kit.

If your tanks have never been taken off, you can look forward to fun taking those screws out of your tanks to replace those hoses.

In a nutshell, if your bird is older than a 1968 Cherokee, your chances are good that your hoses will need replacing, and the chances are even greater that you have the old type pinkish sealant in your tanks. At this point you have the decision to make, AUTOGAS or NO AUTOGAS STC.

Engine Conversion - How About Porting?

Nelson Muncy, of Artesia, New Mexico, asked for advice about converting to another engine and about "porting" his mill. The answer:

To answer your question concerning an engine swap: yes, you can change engines. With enough money to spend and enough perseverance to tackle the STC process with the FAA, almost anything is possible. Whether it would make sense for you, however, is something only you can decide.

The porting issue is one we have not previously covered. Engine porting is an old hot-rodder's trick which increases engine power by removing metal from the intake and exhaust ports of a cylinder thereby improving "volu-

metric efficiency."

The technique certainly works well for automobile engines. Anything which improves engine breathing should, and does, increase engine power.

Porting is more controversial in aircraft engines, however. These engines are designed to be lighter and do not have much extra metal to spare.

Although several shops are doing porting, and have been doing it for about five years, the process does not make much sense for most owners. In the first place, porting is expensive. Secondly, you cannot get something for nothing - ported engines use more fuel than un-ported engines to get the extra power. The smooth, ported intake manifold also tends to prevent fuel from mixing properly and a lot of fuel goes straight out the exhaust pipe.

Finally, the big disadvantage was recently summed up by Light Plane Maintenance magazine when it said, "it's hard to be enthusiastic about a procedure that...can potentially compromise...cylinder head strength."

In other words, removing metal from the heads can aggravate a problem with head cracking which is already a problem in the field.

Generally speaking, porting is not a recommended procedure for light aircraft unless the owner is planning on participating in long-distance racing.

Geared Starter

by Gary Adams and Linda Wilson

Our first major chore after purchase was to attack the ever frustrating hard starting problem which is a well known characteristic of the older 140's. Our plane had the non-geared direct-drive starter and unlike some others we have read about, it started very well on the first start of the day.

With some careful hand propping (about eight good pulls) and the mixture on full rich, it usually started about eight times out often. No priming was necessary. The problem and frustrations came with the second and subsequent starts that day, especially on the warmer days.

Even a master at "timing the bump" with the starter switch was lucky to get it started. Once she started though, she flies like a dream.

We worked methodically through the "Hints and Tips" - cables, corrosion, battery, box, all connections - no help. We finally got to the geared starter alternative as recommended in an article in "Hints and Tips" by Gary Fisk of Lomita, California.

The El Reno Aviation folks in Oklahoma were great to do business with. The new starter, a Prestolite model MZ 4218 ($450), and the ring gear ($120), which has to be changed with this model starter, were installed approximately six months ago. El Reno could not locate the previously marketed starter that utilized the stock Cherokee 140 ring gear.

The results were very rewarding, it's now 120 hours later and lots of starts -what a difference - and a great relief. We finally feel like we have a real airplane.

Spinner Source

By Mike Friedman

During the past years I have been reading in the CPA magazine about the problems in obtaining spinners and bulkheads for the Cherokee. Imagine my dismay September 25 when I arrived at the Manchester, NH airport to fly my 1962 Cherokee 160 (N5540W) and found the spinner bulkhead bashed in and the bulkheads bent and cracked. Someone struck the plane while I wasn't around to complain, and they did not hang around long enough to confess.

As I expected from reading in CPA magazine, calls to Piper and all of the other usual channels for parts brought nothing more than amused giggles. We called every salvage yard. One even told us of their 170 plane waiting list for Cherokee spinners and bulkheads. Needless to say I was not a happy Piper owner.

After doing some interesting cross referencing, I discovered that the 1501160 horsepower Tri-Pacer used the same spinner, Piper part number 14422. Earlier in my search I had called a coinpany called Univair because they list a Tri-Pacer spinner, but they explained to me that they had nothing for the Cherokee.

Interestingly, their part number for the spinner was 7-U14422. Hmmmmmmm. I called back and after asking a few questions about dimensions and mounting holes 1 ordered the parts.

When the spinner arrived the next day (it was in stock!) it was stamped as "FAA/PMA approved for the PA-18, PA-22, PA-25, and lo and behold PA-28. It bolted on without problem, and N5540W was back in the air again!

This should come as welcome news for all of those Cherokee owners with cracked or otherwise unserviceable spinners and bulkheads. Univair was not aware that the part they were selling was approved for the PA-28 etc., and they only advertise it as a PA-22 spinner in their catalog.

They carry the spinner, and both the outer and inner bulkheads either separately or as a complete kit. The cost of the kit is $239, and it is FAA/PMA approved for the PA-28. Univair's phone number is 303-375-8882.

I hope this helps out some of the spinner victims I've read about during the past years. If anyone out there sees a plane with wing tip damage accented by a smear of yellow paint (the color of my old spinner!) please let me know, my insurance company wants to speak to them.

Bushings Don't Fit All Control Yokes

By Lloyd C. Freeman

Some months ago one of the members asked about asource of control column bushings and you told them about the Teflon bushings sold by Wag-Aero. These bushings have a314 inch inside diameter and will not fit later model Cherokees with the larger diameter control columns.

Fuel Pump Gasket Information

You recently published an article regarding gaskets for the Facet and Bendix fuel pumps. The writer stated that he could not buy a gasket for this pump because he could not find a part nwnher.

So, as he stated, he bought a NAPA automotive repair kit and solved his problem. Well, as you know the fix was only temporary. He may have stopped a possible fuel leak, hut he put his insurance injeopardy. Also, unless he is a certified FAA mechanic any such repairs he may have made, if known to a future buyer, will greatly reduce the demand for his aircraft

For the benefit of the CPA membership I have researched the pump situation and offer the following information:

Model	Pump PIN	Cover Gasket No.
PA-32-260	481-701	751-872
PA-28-235	481-701	751-872
1611181	481-666**	751-872
180/160/150	481-666**	751-878/751-872*
PA-28.140	481-666**	751-872

** This unit has been replaced by Piper with Part Number 35328-800. It uses Cover Gasket P/N 751-872.

* 751-878 gasket was used on earlier pumps with stamp numbers R-1 through R-7 on them. 751-872 is used on R-8 and up pumps. Current cost: $2.45.

We hope the foregoing information will be helpful to the membership and keep them out of trouble.

Vacuum System Tip; EGT Questions

Here's a maintenance tip for owners of aircraft equipped with an Airborne (Parker Aerospace) central vacuum system filter.

1 spent an uncomfortable hour under the instrument panel trying to figure out how the filter assembly was attached to the firewall and how it could be disassembled to replace the element. Finally, 1 located a nut on the upper left forward face of the firewall that holds the assembly in place.

Once this nut was removed, it was easy to disassemble the filter mechanism wider the instrument panel and replace the element.

By the way, unless you have extremely long arms, it's a two person job - one person under the instrument panel holding the through bolt securely to prevent it from turning and a second at the firewall to remove the nut.

Also, I would appreciate your advice about identifying which cylinder in a Lycoming 0-320-E2A operates at the leanest mixture (highest EGT) during cruise power settings. I know that Lycoming is reluctant to provide a specific answer to this question because of product liability concerns. I am also aware that the leanest cylinder may vary from engine to engine and from one installation to another.

Notwithstanding all these caveats, there must be a "rule of thumb" that says that in the majority of -E2As installed in 1968 Cherokees, the number X cylinder runs the leanest at cruise.

If there is a high degree of repeatability between engines, I sure would like to know which cylinder it is.

Finally, in a related question, what recommendation can you provide concerning the price, accuracy and reliability of high quality analog EGT units (e.g. Alcor) versus the new generation of digital EGTs (e.g. Electronics International?

W.R. Vandeventer
Atlanta, GA 30360

Dear Rich,

Thanks for the tip regarding the replacement of the vacuum filter.

As to your question regarding the leanest cylinder in a Cherokee 140, as you state, there is no sure fire way to say. Piper, however, recommends placing the probe of a single-cylinder EGT on the number three cylinder. The reason for this location is that this is generally considered to be the leanest cylinder in this application.

However, the leanest cylinder varies from time to time on the same airplane depending on the power setting. The accepted convention, in the industry, is to determine the leanest cylinder at full power application.

Faster Plane With Prop & Rigging

by Torello Tacchi

6203J (Turbo Arrow) has been a real pleasure to fly. It made possible our instrument rating and a lot of fun. In a letter I wrote some time ago, I mentioned a repair shop nightmare, which to date has not reoccurred nor shows any signs of reoccurrence (I'm having trouble holding up my swollen head), I have since replaced the wing tips (Met Co Air), upgraded the radios, but alas, like everyone else I want to go faster. Where do I start?

Easy - the propeller is a likely target for scrutiny. A quick look at the logs (HA,HA) and only one entry: "prop inspected"

I contacted Mr. Joe Brost of Oceanside Propeller Service in Merrit Island, Fl. and sent my propeller off for a recommended overhaul. Joe did an excellent job: meticulous, very reasonable and most importantly, prompt.

He also revealed that this propeller can no longer be overhauled because it has been done three times previously (logs you say?) and that it had been shaven to maximum tolerance.

He also re-pitched it from an estimated 74 x 53 inch to its standard 74 x 58 inch and presto - a 15 mph gain.

Although the gain was substantial it still climbed like an aerobatic machine and still over revved on straight and level.

A call to Joe revealed a slight loss due to material removed from the prop. A cure would be to re-pitch to the allowable extra inch. Joe did so free of charge my only cost was shipping, coffee and donuts.

Guess what: five more mph. I could now reach the advertised speed of 142 mph. I could still over-rev but only by 100 rpm. Climb went from 1000 fpm to 800 fpm (those figures are real). I highly recommend Oceanside.

I also decided to find out why, this plane always flew left wing low. A careful study of the shop manual, revealed that I was flying right when the ailerons never lined up flying straight and level.

1 made a gauge required for rigging and lo and behold, the ailerons and flaps were out. So follow the book. I did and guess what: straight and level, no wind, solo, 25 gallons of fuel - 150 mph cruise.

The tach needle was, of course, in the red so I had to back off to avoid over doing it. But I could probably stand more propeller. I bad read about the importance of proper rigging - now I believe it.

O3J is now in the shop to have a pitot-static check to keep "Big Brother" happy and me safe, and a wing leveler I purchased from Clyde Meyers, installed.

I still wish I had more speed, but I believe the extra few or at least the published "numbers" will keep me off the streets for a while. It's amazing how much performance one can gain by making it "according to the book".

Heavy Fuel Burn In Cherokee 235

Charles W. Legan reported an excessive fuel bum on his 1965 Cherokee 235. His answer:

The power setting table for a Cherokee 235 indicates that fuel consumption at 75 percent should be 15.1 gallons per hour when leaned for best power cruise, and 13 gallons per hour when leaned for best economy cruise,

The question then is what method are you using to lean your engine. Your fuel burn is a little high, but properly leaned it should fall somewhere between these limits at 75 percent power.

You did not indicate in your letter whether you are leaning by ear or are using an EGT or engine analyzer, Whatever method you use, it is the leaning process which will determine your fuel bum.

However, beware of over-leaning that engine. Too lean a mixture will save a little fuel, but you run the risk of burning those exhaust valves - a very expensive proposition.

Trouble With Hot Engine Starting

E.J. Peiker reported difficulthot starts in his Archer, often requiring two hours since shutdown before normal starts were possible. His answer:

Hot starts are a major problem for many aircraft owners. A lot has been written about the problem, but much of it is applicable mainly to fuel injected engines. Fuel injected engines present a special problem because of their long exposed fuel lines, but as you point out, the malady can strike at the heart of normally aspirated engines as well.

Normally, an engine which has been shut down for no more than 15 minutes should have little difficulty restarting.

Simply crack the throttle and engage the starter. No priming should be necessary (and whatever you do, do not pump the throttle).

If the engine refuses to start, you need to try the hot start procedure. The idea here is to clear the engine of excess fuel vapors without flooding it in the process.

The starting procedure is as follows:

1) Open the throttle about a quarter of an inch.

2) Turn the master switch on.

3) Turn the electric fuel pump on. The idea here is to pump cool fuel into the overheated carburetor system.

4) Put mixture in the idle cut off position. You do not want to flood the engine in the process of trying to clear it.

5) Engage the starter. When the engine fires move the mixture control forward and set both mixture and tluottle at the proper settings.

The procedure here is basically similar to the one used in fuel injected engines, but it is also the procedure recommended by Piper for normally aspirated engines.

One important thing to remember: whenever you have trouble starting your engine, do NOT crank for more than 15 seconds at atime. Then, make sure you wait aminute or two before resuming cranking. Otherwise, you will overheat the starter and perhaps the battery cables as well. Extended cranking has been known to melt the terminals off a battery when there was some resistance at the terminals.

Recommends ECI

by Gene Kujawa

We did a field overhaul on my Lycoming 0-320-E2A, 90 hours ago (May 91). The crankcase, crankshaft, connecting rods, etc. were done by Engine Components, Inc. They did all the machining and they also overhauled my cylinders to new limits with their Cermichrome process.

I am obtaining 13 to 14 hours per quartofoil, I was extremely pleasedwith their entire organization. I called them with various questions on service bulletins and procedures about a dozen times. They always bent over backwards to answer my questions and usually would connect me to the shops foreman who was responsible for the component in question.

I would highly recommend Engine Components, Inc. in San Antonio, Texas to anyone needing the services they offer. ECI was also very price competitive and even less expensive than similar concerns. ECI offers machine services, parts and a tear down inspection report and cylinder rework, etc. They will assemble cylinders only.

Caring for your Oleo Struts

By Terry Lee Rogers

Oleo struts create many of the maintenance problems which face Cherokee owners. And yet perhaps no where else can a little preventive maintenance pay such surprising dividends.

Struts themselves are simple affairs and maintenance is simple. With a few precautions pilots can do most of the work on struts themselves, saving money and insuring that their struts won't leave them flat.

First let's take a look at what we are talking about. The accompanying drawings show typical Cherokee nose and main gear oleo struts. They are all very similar, consisting of a housing in which a piston is free to travel up and down. The piston and tube is, of course, connected to the axle of your plane.

The assembly is topped by a high-pressure filler valve, similar but certainly not identical to the valve on the tires of your car. Air and oil inside the strut provide the spring effect for the landing gear.

The only other strut parts are the "0" ring seal and several retainer clips. These parts are where the majority of problems occur.

A shut goes flat when air or oil leaks from the unit. Air may leak out because the filler valve is not completely tightened or because the valve itself has been contaminated by dirt.

With oleo struts, the adage "cleanliness is next to Godliness" might be turned around to say "Cleanliness is next to lower maintenance bills." Each filler valve (there are three - one for each wheel) must be capped with a yellow pressure cap, MS20813-1B. If one is absent, buy one and put it on. Otherwise, the filler valve will become contaminated and leak air.

Fluid, too, has a tendency to leak past the "0" ring and retainer rings. Damage to the " 0 ring occurs because of dirt or pitting of the piston tube.

This tube, a portion of which hangs out in the breeze, carries an oily film which attracts all kinds of grit and dirt. Upon landing, of course, the tube is driven up into the "0" ring, taking the grit and dirt with it.

The simplest preventive maintenance trick, which will pay big dividends, is simply to carry a rag with you on all preflight inspections. Use that rag to wipe away any dirt on the oleo strut tubes. Do this every time you do a walk around, whether the struts appear to be dirty or not. The dirt may not be obvious, but it is there.

When taxiing, as much as possible, avoid areas with dust or, in other weather conditions, mud.

The hardest hit strut is usually the nose wheel strut. This is so because the strut is directly behind the prop which tends to blow dirt directly onto the strut. For this reason, many pilots keep their nose wheel strut inflated to the minimum height recommended by Piper. The idea is to keep damage down by limiting the amount of chrome tube exposed " this prop blast.

Routine Strut Service

Despite preventive maintenance, you are eventually going to find a strut which is low or completely flat. What shall you do!

The FAA says that for routine service - adding air, oil, or both - you will not need a mechanic. You may service your own plane (but not planes belonging to others!)

First, determine whether the strut is low on air or oil. The test is simple. Using a wing tip, rock the plane a few times on the gear. If the plane bobs up and down in short strokes and stops after just one or two bobs, you need to add air. If it travels in longer strokes and continues to bob after you stop rocking the wing, you need to add oil.

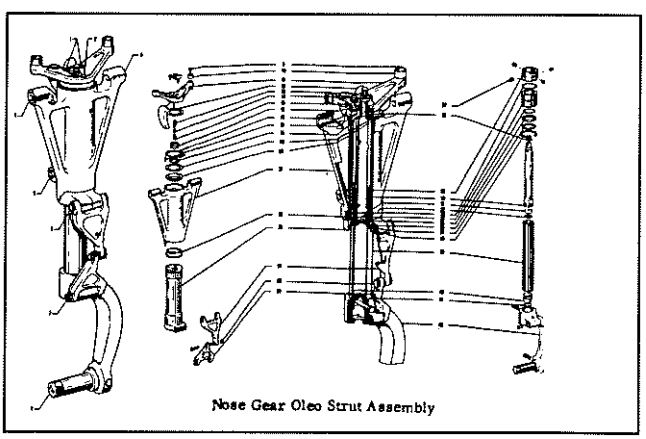

Nose Gear Oleo Strut Assembly

To service a strut the wheel needs to be off the ground. Jack up the wing or apply weight to the tail through the tail skid to raise the nosewheel. Be sure to chock the other wheels to prevent the plane from moving.

Now, remove the air from the strut. Remove the yellow safety cap to expose the valve. Then, slowly push the valve core needle in to release the air.

The valve looks like a tire valve and acts the same way. But be sure to release the air slowly - there is hydraulic fluid as well as air in that strut, and too much too quickly will get you a bath in the stuff.

After all of the air has been released, remove the valve core from the valve using the same type of tool used to remove an automotive tire valve.

Get a rubber hose with a 114-inch inside diameter about four feet long to add fluid. Attach one end to the valve and put the other end in a clear jar filled half way with hydraulic fluid.

Speaking of hydraulic fluid, the substance we are talking about is aircraft Ruid known as 5606. It is not clear, like automobile brake fluid, hut red, like automotive transmission fluid. It is a discrete substance, however, and should not be mixed with any automotive product.

Now that the air is out of the strut, you are ready to use the wheel on the plane as a pump to add the proper amount of 5606. Lift the wheel slowly and slowly let it down again. Keep repeating this process until the fluid corning out of the hose into the jar has few or no bubbles coming out with it.

Then, lift the wheel, compressing the strut. Remove the hose from the valve and let the wheel settle down. Finally, reinsert and tighten the valve core.

There are two ways to put air into the strut: with and without a strut pump.

A strut pump is adevice which takes standard shop air, between 100 and 200 psi, and increases the pressure up to as much as 1,500 psi. Such a pump can be purchased for less than $100 from mail order firms catering to A&P mechanics.

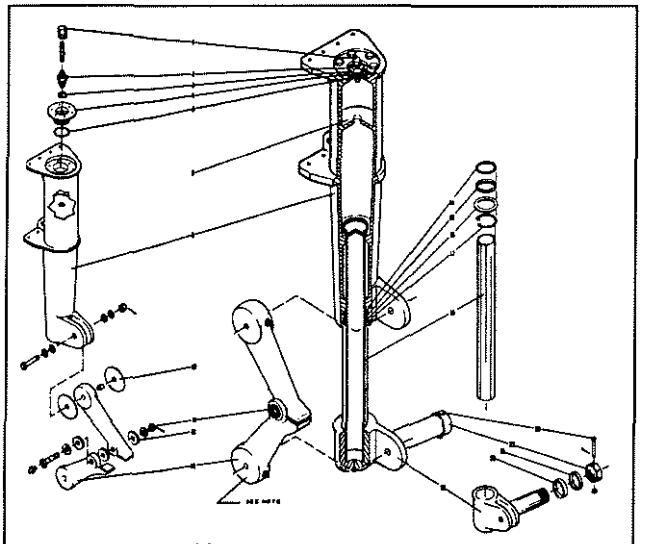

Main Gear Oleo Strut Assembly,

With the airplane removed from jacks and the wheel sitting on the ground, air from the strut pump is added via the filler valve until the extension is correct. Jiggle the wings to be sure the strut has settled down. Piper specifies tube exposure of 3.25 inches for the nose gear and 4.5 inches for the main gear of a PA-28 with fixed gear, and 2.75 inches for the nose and 2.0 inches for the main gear of a PA-28R.

If you do not have a strut pump you must add air while the plane is still on jacks. Use the low-pressure shop air or air from your portable bottle of air to fill the strut. Then, lower the plane and check extension.

You will probably be overextended, which requires that you SLOWLY bleed air from the valve. A little air goes along way, so make sure you do not rush this, or you will be jacking up your plane to add air again. Be sure to rock and jiggle the wings to make sure the plane settles after each attempt to release air from the valve.

Before we leave this topic one word of warning about the filler valve. As we said, it looks like a tire valve but it is not a tire valve. Actually known as a *Schraeder* valve, it is designed to handle extremely high pressures, whereas a tire valve is not. Also, the tire valve has rubber parts which will deteriorate if exposed to 5606 fluid. Using a tire valve, either accidentally or on purpose, is an invitation to disaster as the valve eventually deteriorates and finally explodes, probably during the shock of a landing.

Replacing the "O" Ring

Pilots may add air or hydraulic fluid to shock shuts - it is specifically authorized by Appendix A of Part 43 of the FARs.

But for most Cherokees there comes a day when a hydraulic fluid leak requires that additional service be performed. The "O" ring seal needs replacement, and a pilot can perform this service legally only under A&P supervision. The mechanic will have to oversee the work and sign it off in the aircraft logbook.

First of all, the plane must be jacked and the strut deflated. Place a driy pan under the strut - this is going to be messy.

Remove the Schraeder valve from the top of the strut. You can cut down the amount of mess by inserting a small diameter tube into the top of the strut and draining as much hydraulic fluid as possible before disassembly of the strut. Any hydraulic fluid removed from the strut must he thrown away. Do not plan on reusing it.

Remove the upper and lower torque link connecting bolt assembly and disconnect the links. Note the nunber and thickness of any spacer washers between the two links. They will need to be reassembled in the same position in which they were removed.

The piston tube is now ready to he removed.

After removal of the piston tube remove the retainer (snap) ring, spacer ring, and then the scraper ring. The "O" ring seal, located just before the scraper ring, may be removed by using your fingers, or, if necessary, by using a

curved wire or spoon shaped tool inserted under the ring.

Reassembly is the reverse of disassembly.

First, lubricate a new "O" ring with 5606 fluid and insert it in the slot. Now, install the scraper ring, spacer ring and finally the snap ring.

Carefully reinstate the piston tube into the housing being careful not to use force. You do not want to twist the "O" ring in its slot. Lubricating the piston with 5606 fluid will help.

Reattacli the upper and lower torque links being careful to reinstall any spacers in the correct position.

Do not over tighten the links. Piper says that the links should be free enough to permit easy action of the gear, but should he tight enough so there is no side play.

Now, you are finished except for servicing of the strut with air and hydraulic fluid using the same method you would use for routine service.

Congratulations! You have done a lot of work, but your Cherokee should he standing tall with a landing gear like new. And you should know as much about oleo strut landing gear as any pilot.

Inspecting the Cherokee

By Terry Lee Rogers

Every Cherokee is inspected once each year or each 100 hours of operation. Nonetheless, many mechanics are not overly familiar with the Cherokee line and some inspections are not as thorough as they might be. This article will take a look at some of the items commonly missed on inspections.

Before any inspection of a Cherokee, the inspection checklist published by Piper should be secured. These checklists are detailed and indicate every item which needs inspection. Obviously, other publications are also needed, including service manuals and service bulletins from both Piper and the manufacturers of the engine and accessories.

So, with that sort of disclaimer out of the way, let's take a look at some of the specifics involved in a Cherokee inspection.

Propeller: That propeller needs to be checked closely for nicks and gouges with special attention required if the plane is operated off unimproved strips.

For those planes supplied with fiberglass spinners, check those screw holes, especially from the inside.

For constarit-speed propeller models, make sure the Hartzell AD has been complied with and that the propeller is within TBO. (For more information about TBO, consult Hartzell Service Letter 61.)

Cowling: Remove the cowl and inspect it - do not just place it in the comer and ignore it until it is time to reinstall it. Disconnect the landing light wires before removing the lower cowling. Check the wires (one ground, one to the bulb contact). These wires often become brittle from exposure.

Check the fasteners for wear, particularly the bushing which receives the pin, at each fastener location. Tliese often wear and, in a few cases, have permitted the cowling to depart the aircraft in flight.

Engine: Begin inspection of the engine while it is HOT. The compression test needs to be conducted with the engine at or near operating temperature. On some models. readings are more easily obtained from the lower plug holes rather than the top due to interference with engine baffles.

Valve cover screws on Lycoming engines should be tightened to eliminate oil leaks. They have a tendency to vibrate loose. They should be torqued to 50 inch-pounds dry.

Cooling baffles must operate properly or you will have an overheating engine. Check for looseness, cracking and for absence of the rubber seal along the top. Some models have a metal rod to maintain tension - tlie rod should be checked for tightness.

Hoses and **Lines**: Inspect all flexible lines and hoses. Remember, Piper recommends replacing these lines every 1,000 hours and that is a good idea. On early models, Piper used a lot of copper tubing for such things as oil pressure sending lines. Check them carefully as they are prone to wear and hardening. Do not be amazed if you find that the hoses are the original equipment hoses - even on older planes.

Timing: Those magnetos need to be timed. And with the PA-32 series there is a catch. The timing marks are hidden by tlie propeller spinner bulkhead. Luckily, there is a second set on the rear of the flywheel which should be aligned with tlie split in the crankcase. The procedure is to do a "rough" timing with the rear marks, then go to the small front marks for the fine tuning with the hole in the front of the starter Bendix housing.

SCAT Tubing: That tubing is functional - check it for wear and tear and replace if necessary.

Exhaust System: Start at the top of the cylinder exhaust flanges and work down. Remove all shrouding, carb heat and cabin heat and look for discoloration and cracks. Make sure all nuts or gaskets are intact.

Engine Controls: Make sure that all engine controls (throttle, mixture, carb heat) are hitting the stops, Be sure there is enough cushion showing in the cockpit. Use the amount of space specified in the maintenance manual If none is shown, leave 1/4 inch between the control and the firewall to permit the pilot to know the control is going all the way to the stop.

Rigging: Check rigging of all cables using a tensiometer. Poor rigging is a major cause of handling and performance problems. Be sure to check all pulleys for wear and inspect cables for fraying.

A particular problem involves the Cherokee flap clevis. This little bolt attaches the flap actuator handle to the cable. This AN23-11 bolt is prone to wear. Piper's inspection guide recommends replacement every 500 hours, but they are cheap. Replace them whenever they begin to look suspicious.

Cherokee Hints & Tips

Fuel Selector: Check the fuel selector for leaks. Put a wrench on each of the " B nuts and check for looseness. Make sure the mechanism works smoothly without binding. Examine the lines themselves for wear. The fuel selector valve controls all the fuel used by the plane and if it sticks between detents, the result will be a forced landing.

Interior Items: lnterior items which are often omitted on an inspection include the seat rails and attach points, seat belt and shoulder harnesses. Seat belts more than five years old can no longer meet safety requirements - exposure toultraviolet light have drastically reduced their strength. Replace them.

Landing Gear: The first thing to do is remove those wheel pants and check for damage. Make sure they are not caked up inside with mud. With the pants removed, you then have access to the wheel and brake assemblies.

Inspect tires, wheel bearings, brake pads, and the brake discs. Check the wheel halves at each bolt hole for cracks. If the wheel discs are pitted, replace them. Otherwise, they will act like a file and grind away the disc pads as fast as you can replace them.

Inspect the landing gear for security, especially at the upper attach points. Look for pitting of the strut tubes and inspect for leaks. Make sure the gear is properly intlated.

Pay close attention to the torque links. Look for cracks and for proper security. When disassembling a torque link, you will find numerous washers in the assembly. Put them back in exactly tlie way they came out - not according to the picture in the maintenance manual. These washers are used to adjust the wheel alignment on a Cherokee and changing the order throws the wheel alignment out of adjustment.

Pitot Static System: The Cherokee uses a dual-purpose pitot-static mast - both pitot and static ports are located in the same unit. Check for cleanliness and for obstructions.

Check the lines themselves, especially where they pass from the wing to the cabin. On many models, they make a sharp turn at this point and have a tendency to chafe.

Wings and Control Surfaces: Check each wing for loose rivets and for obvious damage or defects. Those fuel tanks form an integral part of each wing. Check underneath for leaks. Check caps for security and make sure there is no rust in the filler necks.

Check all control surfaces for freedom of movement and for security. Check tlie aileron balance weights to make sure they are not loose.

Be sure to check the leading edge of the stabilator for wear or damage -they are subjected to more than their fair share of abuse.

Exterior Fuselage: Get under tlie plane and make sure there is no damage there. While there, check all antennas for security and damage. The underside of an airplane is a place which generally gets very tittle attention from anyone.

The inspection process on a Cherokee is very straightforward and would present few problems except that some mechanics have had little experience with them.

Piper publishes an excellent checklist for use with an annual inspection (and it makes a nice list for a pre-purchase inspection, also.) Use of that list almost guarantees a good inspection.

If possible, it is a good idea for an owner to either participate in an inspection or at least be at the inspection location to see for himself how thorough an inspection is and to get an idea of the condition of his plane.

Plane owners fear the unexpected discovery at inspection time which will cost them extra money for repair. However, a good, thorough inspection is like life insurance. What owners should fear is the major problem which is NOT discovered in the course of the annual inspection.

Wobble Test - Valuable Tool

By Steve Lindblom

We just got around to doing the valve wobble test on 9659W and thought CPA members might be interested in reading about it. I did an article about it for *Light Plane Maintenance* should anyone want more detail.

Most CPA readers have probably seen mention made in POM and elsewhere, of Lycoming Service Bulletin 388A, usually referred to as the "valve wobble" service bulletin. This service bulletin, which has been around since 1978, gives a procedure for checking exhaust valve guide clearance without removing the valve or cylinder, by measuring bow far the valve can wobble side to side in the guide.

Lycoming suggests it be checked every 300 hours in helicopters and from mid-TBO on in aircraft It applies to all Lycoming aircraft engines although compliance is not mandatory.

As a result, very few A&P mechanics and Lycomuig owners seem to have bothered with it. The reason seems to be a mistaken belief that since valve guides aren't likely to still be tight on an engine with time on it, all the procedure will detect are loose ones, and those will be taken care of at rebuild time.

No so! Tight guides are the most likely problem, caused by the build up of lead and carbon deposits within the guide.

Since valve sticking is a common Lycoming problem, its a mystery why this service bulletin is not more often complied with. Certainly, anyone who is considering having an engine topped because of valve sticking problems, or has a high-time engine and is trying to decide whether to do some TBO busting should give it a try.

Two special Lycoming factory tools are required to do the job, a cast aluminum gage plate which holds a dial indicator, and a valve stem adaptor which clamps to the valve stem and acts as an extension to provide a clear surface to indicate off of.

The valve covers, rockers and rocker shaft are re-

moved, the adaptor clamped to the tip of the valve stem, and the gage and dial indicator bolted to the head using two of the valve cover screw holes. The valve is then wobbled back and forth, and the difference between the high and low reading noted.

I'd figured on improvising the tools, using a home-made adaptor and a simple dial gage holder, but ended up borrowing the tools from Lycoming. Lycoming, it turns out, has a set of service tools at the factory they loan out for free.

It's just as well I did, because the gage turned out to be a more complicated proposition than is clear from casual reading of the service bulletin. Not only does it hold the dial indicator, but it also compresses the valve spring so the valve is free to wobble, and gives asurface to pry against when you wobble the valve. It's a low-tolerance piece, though, and could easily be improvised in the field, should it be necessary, by taking a piece of flat plate and using the illustrations in the service bulletin as a guide, drilling and hack sawing the necessary holes in it for the mounting screws, rocker ears and adaptor to go through and adding an ear to hold the dial indicator.

The one critical dimension is the height of the dial indicator above the head - it should be 1 3116 inches from the gasket mating surface. Lycoming is currently working on plans for a new gage that will be easier to make and use in the field.

The job turned out to be an easy one. A good mechanic should be able to do it in only a couple of hours on a 320 or 360 (other Lycomings may require removing more parts.) The specs call for a minimum of .025 and a maximum of .045 inch for 1/2 inch guides.

One of our guides failed. being too tight at .016. Too tight is better than too lose, since loose guides mean overhaul time, where tight guides can simply be reamed, Lycoming, in Service Instruction 1425, gives a procedure for removing the exhaust valve aid reaming the guide in place - all without removing the cylinder. It takes about a hour or so per valve, given a mechanic with nimble fingers.

If anyone has an otherwise sound engine with sticky valves, this could be a real money saver.

Caring for Your Cherokee Propeller

By Terry Lee Rogers

Pilots spend hours tuning their engines to peak efficiency and washing, waxing and otherwise caring for their airframe. Yet they often neglect the most important determiner of performance of them all - the propeller.

In fact, the only consideration given the propeller by many pilots is the quick check for nicks during the preflight inspection - and that inspection is cursory for many pilots.

The propeller deserves more attention. A prop which is out of balance or incorrectly pitched can cut miles per hour from cruise speed, while a prop which has been subjected to mistreatment can fail catastrophically.

The Fixed-Pitch Prop

Fixed-pitch propellers are a lot easier to care for than constant-speed props, but they still need care.

First of all, fixed pitch propellers do not need to be overhauled. Nonetheless, Sensenich recommends "reconditioning" the prop every 1,000 hours.

Reconditioning, of course. means doing preventive maintenance on the propeller blades. Typically, the blades are stripped of paint (usually by bead blasting), then a dye-penetrant inspection is performed to look for cracks. The blades are heated to force any cracks present to show up more vividly.

Then the blades are sprayed with a dye and given time to permit the dye to penetrate any cracks which might have been missed. A developing solution is then applied and the blades are checked under ultraviolet light. Cracks show up as red-blue lines in the blades.

Obviously, cracks are important. Even a small crack can lead to blade failure, and blade failure is much more serious than an engine failure. When blades fail often apiece departs tlie propeller and when that happens the whole assembly becomes so unbalanced that it may cause vibration severe enough to wrench the engine from the airframe.

Any cracks detected by any of the procedures above mean that the propeller must be scrapped. If no cracks are found (the nonnal case), the prop goes to the next stage.

All dimensions of the blades are checked - length, width, chord thickness. If the blades are within limits, they are put through a grinding process to remove surface metal fatigue and any corrosion pits.

Metal fatigue is a killer of propellers. Remember, any time a propeller is working, one side of the blade is placed in tension and the other side in compression. This results in fatigue which is cumulative - no blade can be expected to last indefinitely even if no undue stresses are applied. The accumulated metal fatigue takes its toll over a period of time.

Luckily, this fatigue is concentrated at the surface, which is why surface grinding is able to relieve it.

After grinding, the blades are anodized and treated wit11 Alodine so that the blades develop a corrosion-resistant surface coated with aluminum oxide film.

Finally, the blades are painted and the prop is given a static balance. It is now ready to be reinstalled on your plane.

To have your propeller reconditioned, plan on down time of three days and a cost of from $175 to $400.

What's the Pitch?

Actually, the type ofperformance you get from your plane depends largely on the pitch of the propeller. And the good news: pitch is adjustable within certain limits.

The propeller Piper selected for your airplane was designed as a compromise to permit the plane to be as ver-

satile as possible. Unfortunately, this Jack-of-all-trades propeller is most efficient at only one particular airspeed and engine rpm, usually closest to the rpm which produces tlie full rated horsepower.

However, this standard prop is not something you are merely stuck with. You can select from cruise and climb props if your demands make a switch advisable.

Using different pitch settings is similar to shifting gears in an automobile - you use a low gear to climb a hill and permit the engine to rev up at slower speeds, while you use ahigher gear for highway driving when maximum speed is desired.

The same principle works for airplanes. The pilot who fliesonly long-distance trips aidoperates from lengthy runways will find a cruise prop an advantage, while apilot who flies shorter hops and has to contend with short-field takeoffs regularly will be happier with a climb prop.

For those seeking speed, especially in conjunction with performance modifications which eliminate aircraft drag, a cruise prop is a natural. You may be able to increase speed 10 to 15 mph with no increase in fuel consumption or engine wear.

The down side, however, is that you will lose some of your takeoff performance so it is not a change you will want if you occasionally have to contend with short field takeoffs, especially if conditions are hot, high and humid,

Pitch is measured in inches a i d is reflected in the last two numbers of your propeller. A Sensenich M74DM58, for example, is a 74 inch propeller with a 58 inch pitch. It was standard on the Cherokee 150. It means that the propeller would move forward 58 inches for one turn of the propeller if propeller efficiency was 100 percent (i.e., no slip.)

So you want a cruise prop'? Nave your prop repitched to 60 inches. How about a climb prop'?Once again, a re-pitch is called for, this time to 56 inches. Those numhers make a big difference in performance.

If you want to change the performance characteristics of your plane, discuss the matter with your propeller shop. They can usually re-pitch the propeller on your plane for a fairly nominal cost.

Hartzell Props - Overhaul

Hartzell props are controllable - that is, they are constant speed props as used on the Arrow and the PA-32 line of planes. They eliminate having to select one performance characteristic - they are adjustable so you have a climb prop, a cruise prop and everything in between.

Unfortunately, their complexity results in some additional maintenance and in higher maintenance costs.

To begin with, constan-speed props do need to he overhauled and they come with a factory recommended TBO (time between overhaul), just as aircraft engines do,

Now everyone knows that manufacturers' TBOs are recommendations only - they are not mandatory except for commercial operators who must comply with them. Nonetheless, Hartzell says that the TBO was selected for more than arbitrary reasons - that propeller takes a helluva beating handling all that horsepower and at TBO time it really needs to have parts replaced.

Also, the TBO on most propellers is at least 2,000 hours, so it only makes good sense to have the propeller overhauled while the engine is in for its overhaul.

In addition to the service of blades (as indicated above for fixed-pitch props), constant-speed propellers need to have service of the governor and the guts of the hub.

And while your local mechanic can overhaul your engine, he cannot overhaul your propeller. He can merely remove the propeller - it is then sent to an FAA-approved repair station rated to work on your prop model.

During overhaul, the hub is completely disassembled. Some parts, such as hall bearings, gasketsand seals, are automatically thrown away and replaced with new.

All parts are checked for cracks - steel parts are Magnafluxed while aluminum parts get the same dye-penetrant tesls used on propeller blades.

Once the unit is assembled it is given a static balance, just like the fixed-pitch unit.

If you are going to get a prop overhaul, plan on a five to seven working day down time and plan on spending in excess of $1,000. And if your blades are found to be out of tolerance and need to be replaced, plan on spending several times that amount.

The Black Mac

One possible cure for the recurring Hartzell AD is to convert from a Hartzell to a three-blade McCauley "Black Mac" propeller. The cost of this conversion is not cheap - about $5,000 - but not only does the conversion eliminate any AD requirements, it is also said to be a good deal quieter and it certainly makes a Piper an outstanding looker on the ramp.

The mod reportedly also tones down vibration which not only makes flying a lot easier, but should cut down on vibration induced engine maintenance.

The modification is available from New England Propeller Service. P O Box 415. East Haddam, CT 06423 (800) 873-2388.

And for Archer owners, there is a Black Mac prop for you, too. That prop is a two-blade model and it is not controllable, but it is...well, black. It looks impressive and the company says it has a thicker shank and an airfoil which cuts down on vibration. The cost of this modification is about $1,500.

Balancing Your Prop

To smooth out your flying, why not try prop balancing. Dynamic balancing (performed on a running engine) bas been in vogue for several years and seems to make airplanes a much nicer place in which to he.

To begin, the shop will remove your cowling so a

sensor can be mounted to the engine. The sensor measures the intensity of vibration and transmits the data to a computer.

To determine the location of tlie imbalance the system uses a high-intensity strobe that "freezes" the propeller at the point of maximum imbalance (they put a piece ofreflective tape on one blade to differentiate which blade.)

This information gives the technician infomiation about where to bolt washers on the hub as balance weights.

The engine is run up to cruise speed and the machine then does its thing. In about five minutes it gives a plot of balance and permits the technician to temporarily balance the prop by placing washers on tlie outside of the spinner.

The process is then repeated and the machine will determine whether the balance weights are properly set.

Those who have had their props balanced rave about the increased quietness arid lack of vibration. Generally, they say it was money well spent.

For more information and the name of the balance shop nearest you, contact John Beach, Chadwick Helmuth Corp., 4601 North Arden Drive, El Monte, CA 91731 (818) 575-6161.

Caring For Your Prop

Propeller care is simple, but important. First of all, when doing *a* preflight inspection, really do a preflight inspection. Look that prop over and look for any signs of damage. If a controllable propeller, check tlie huh for any signs of leaks or distress.

Second, when operating off gravel strips or anywhere else where debris might strike the prop, be extremely careful. Just a small nick is enough to start a stress riser which can eventually kill that propeller.

If you find any nicks during apreflight inspection, do not ignore them. Have your mechanic dress them out. And keep away from that prop with a file yourself It is illegal for an aircraft owner to attempt to dress his propeller - it is not simple preventive maintenance. Any mistakes here could kill someone.

And do not over speed your engine. The power delivered by a propeller and the stress it must bear is related to the square of the operating speed. If you over speed the prop by ten percent you will increase the stress more than 20 percent. This extra stress may just do your prop in. Have it checked.

Propeller care is simple and basic. And propellers are trustworthy - fewer than one percent of aircraft accidents result directly from propeller failure.

However, propellers are important and, unfortunately, are neglected by far too many pilots. Propeller accidents are rare, but when they occur they are quite likely to be catastrophic. With just a little awareness and care there is no reason your plane should ever have a propeller problem.

Wing Root Seals; Bulbs & Tires

by Robert B. Fox III

I have a tip to pass on concerning installation of wing root seals. I was advised to wax them and then put them in tlie sun to warm them up before I tried to install them

They became very limp and were pushed in the root gap with a wooden paint stirring paddle. They went in with relative ease, but even so, it took about 75 minutes each. I would have preferred to have white rubber, bul it was not available.

Another item has to do with the use of a halogen lamp as a replacement for the 4509 landing light. According to my I.A. there is no PMA for this lamp and it should not be used regardless of brightness, life span, or cost. The 4595 has a PMA, but the candlepower is 60,000 vs. 110,000 for the 4509.

The 4595 bulb was not the bulb Piper delivered with the bird and, since it is not equal or better in brightness, I do not believe it can be substituted (legally). With a 300 hour expected life span versus 25 hours for the 4509, it sure makes economic sense, however. My 4509 just burned out, but I am not going to say what the replacement will he.

Modifying Those Cherokees

The following two letters are similar to many we receive concerning making modifications on Cherokees. They are similar in that the writers have little idea of the complexity of making changes on their airframes.

This is quite common among aircraft owners. So, for those interested in making some modifications to tlieir favorite airplanes, read on:

Dear Terry,

I understand that to change a 150 horse engine to a 160, all you have to do is add 8.5:1 compression pistons which are part number 75089.

Can this be done with a logbook entry by an A&P and placarded or is there an STC'?

If so can you tell me where I can get this STC'? I would like to increase power a i d change to a cruise prop to gain speed. Let me know the in's and out's of this situation if you can.

I'm sure I'm not the first to wonder about all this. My Cherokee 140 is the Lycomiug E2A model with M74DM58 prop (I think).

arid the following...

Dear Terry,

I am a member of the Association, and have a 1978 Warrior. I really like the aircraft and enjoy flying it.

I understand there was a change to the 79 or 80 Warrior that moved the battery from under the rear seat to

the engine compartment with an increase in the gross weight and useful load. True?

Is there an STC to cover this for my aircraft? It not, would this be an easy change, assuming parts availability from the plant?

First of all, to modify any airplane you need to do more than visit a parts bin and select what you want to add or change on your plane. You must have FAA approval which generally is acquired through an STC or through a 337 fonn.

An STC is commonly needed to make a change. An STC can be either a one-time STC or a multiple use STC. If it is a one-time approval, engineering data is required by the FAA and the approval is for one plane -just one serial number. It cannot be installed on another plane, even if that plane is identical to the first.

Sometimes a multiple use STC is acquired. Here, additional engineering data and testing is required. but the owner of the STC is then allowed to sell the paperwork to others for installation on certain other aircraft. Those aircraft must be of certain model airplanes aid, often, serial number limitations are applied.

In the examples above, there is an STC for converting some 150 horse Lycomings to 160 horsepower. It is held by New England Propeller Service, P O Box 415, East Haddam, CT 06423 (800) 873-2388. The STC requires more than merely replacing the pistons and can become expensive, but it does provide extra performance which many owners desire.

The Warriors with serial numbers 28-8316001 and up have the battery on the firewall rather than under the rear seat. However, moving tlie battery to the engine compartment is not the subject of an STC which can be applied to earlier Warriors. To make the change you would need to go tlirough an expensive process to get FAA approval and then tlie gross weight of your plane would remain at 2,325 pounds rather than go to 2.440 pounds.

There is one other way changes may be made in an airframe - through an FAA Fomi 337, a major repair and alteration form.

However, a 337 fonn is not merely a short cut to getting an STC. It is for otherwise approved changes or repairs - not for unusual modificatioiis of a plane. For example, a 337 form is filled out when radios are added or removed from a plane. The form will then refer to a manufacturer's instructions. For example, when a DME is installed, the form might say, "System installed in accordance with manufacturer's specifications and AC 43-13-2A."

Generally, the FAA fonn will refer to other approved paperwork which is readily available before it will be approved by the FAA.

Has Ordered EGT Probes

by Eniie Davis

Someone was looking for the EGT probes from: Westec, Westberg Manufacturing Co., 3400 Westach Way, Sonoma, CA 95476 707-938-2121

The company is still alive as I spoke to them, ordering some EGT probes.

Airspeed Indicator Cause of Crash

by Tim Brown

This is an update on the crash of N5650U which I wrote about in the November 1991 Piper Owners Magazine. As you may recall, I rode my 1970 Cherokee 140C in a very rapid decent and made a very hard landing 1,000 feet short of the runway after the plane liad made a sudden and steep left bank at 100 feet AGL while taking a BFR.

After many insurance company induced delays, a couple of months of repair and a month of trying to get at appointment with a part-time CFI, I finally started working myself back into flying aid a BFR on May 2.

I was EXTREMELY nervous (i.e., shaking like a leaf, sweaty palms and cotton mouth) but after my new CFI (Tim McConnell of Anderson, SC) reviewed my log book, pilot's manual and gave a preflight briefing describing his lesson plan I felt a lot calmer but still not sure of myself.

Remember I had not flown at all since the "crash" on August 10, 1991 and had not really flown since May 5, 1991. For some reason I did the preflight, engine start, taxi, engine run-up aid take off without a hitch. In fact I was climbing through 800 feet AGL before tlie reality hit me that I was tlying again.

At this moment a BIG grin made its way from my starboard ear to my port ear and I tried to communicate to the CFI how great it was to be in tlie air. I thought for a minute my DG was broken since tlie needle seemed to be glued to our heading of 180 degrees.

We climbed to 3,000 feet MSL and did 720 degree turns both left and right over beautiful Lake Secessioii. My turns were executed so well that I was surprised at my ability to hold altitude and roll out on heading. It seemed almost too unreal that after a year of abstinence from flying that every skill "came back" so quickly. (This is not to be construed as a recommendation. If I liad not had a 7,000+ hour CFI witli me I would have stayed on the ground.)

The real eye opener came when Tim McConnell took control to check out the stall characteristics of N5650U. A PA-28-140C is supposed to stall with no flaps at 64 mph (indicated) aid with full flaps at 55 mph. But without flaps we stalled at 75 mph and with full flaps at 65 mph.

Suddenly, we both lost any desire to do more maneuvers. We made a fast return to the airport and landed with power held until right over the threshold.

This thoroughly explains the "crash" in 1991. Making a simulated engine failure approach at the POH speeds we were on tlie ragged edge of stall when a wisp of a gust caused the left wing to stall and the rest is history. I had also noticed for the past two years that after lifting N5650U's nose at 60 mph an additional amount of yoke pulling was needed to get airborne.

Tim McConnell also found this to be strange on our take off. Taxiing down the runway at 52 mph (indicated) looked like a good speed. (And to think I thought this was due to the width of the runway and my position higher than seen from an auto). In my car I drove at 52 mph and noted a tremendous difference in the motion of objects along the road. If it looks wrong it probably is.

A couple of points your readers need to heed:

1. If you have to haul back on the yoke after raising the nose, check the stall speeds as shown on the airspeed indicator. An airspeed indicator should be assumed wrong until absolutely proven right.

2. Even after an accident or mishap, never give up on yourself. The best approach is to get back into flying as soon as possible. After you return to the joys of flying, the jitters will disappear.

Some Jacking Suggestions

by Ramon Pabalan

As anyone who does a fair amount of maintenance knows, jacking your aircraft is inevitable. I have a few additional suggestions.

First of all, I made two jacks and I must say they are very sturdy. The actual hydraulics I bought from Harbor Freight and Salvage in California. For around $35 they have three-ton hydraulic jacks that rest at around 20 inches and fully pump up to around 42 inches making them ideal for jacking low-wing planes.

I made the bases out of one-and-a-quarter inch angle steel using old bed frames! I welded them into a triangular base 30 inches on each side putting in a tray to hold and center the base of the hydraulic pump in this equilateral triangle. Don't weld the pump itself since the heat may damage the hydraulics.

To hold the top of the pump from tipping over, I had amachine shop fabricate a large quarter inch steel ring that would slip over the top of the pump body and welded it to three 314 inch angle steel braces that I bolted to the three comers of the base.

I used bolts so if I ever needed to remove the pump I could unbolt the braces and lift the bracing ring off and pull the pump out of its centering tray.

Since the pump has no adaptor to fit the cones on the Cherokee jacking points I also had the shop machine a sleeve that slips over the cylindrical ram of the jack. The sleeve. a solid 2 1/2 inch in diameter, has a 314 inch hole on the opposite side 314 inch deep to hold the jacking cone.

For roll-away convenience, I welded two non-swiveling casters on one side of the bases so that when sitting flat, the casters are off the floor but for transport, tipping the jack over onto its wheels allows this heavy jack to move easily. In fact one of my friends showed me how easily it rolls into HIS hangar where I hope my jacks still are.

The bases should be triangular since most floors aren't very level and a rectangular base would rock if one comer wasn't finnly on the pavement. Total cost for the two jacks including paint and machine shop? About $95. 1 also made my own tail weight by cementing a hold down chain into 250 pounds of concrete and when dry, adding four large swiveling casters. 1 use an S-link to connect the chain to hold down hook of the plane.

One tip on jacking retractable aircraft, If only one wing is jacked for landing gear repair extreme caution should be used. The hydraulic pressure and down-lock latches normally hold the gear down and locked, but if the hydraulic pressure is released as when manually retracting the jacked wheel, it could cause loss of pressure enough to release the down-lock and the plane will fall onto the non-jacked wing. This will cause the plane to fall off the jack and punch through the wing. Not a pretty sight. That is if you're still alive to see it after having the plane fall on top of you as you work on the landing gear.

A final comment. Use the jacks on solid, level pavement. If you must jack the plane in the soft dirt of your tie down, use wide heavy boards to spread the load of the jack. Otherwise the jack may imperceptibly settle into the ground until unstable and again, the famed jack-through-the-wing picture.

A Potpourri Of Hints & Tips

by John Sandlin

Regarding the recent article concerning the strange whining noise coming from the engine compartment. I believe that whine is caused by cavitation of the small hydraulic pump inside the propeller governor.

That pump takes engine oil from the oil gallery. increases the pressure to about 250 psi and supplies it to the propeller hub to adjust the pitch setting of the propeller blades to control engine speed. The whine sound occurs soon after the engine is first started and continues until the engine oil is warm and sufficient flow is provided to the propeller governor. The presence of the whine indicates insufficient oil flow to the propeller governor; absence of the whine indicates adequate flow.

To correct the problem: Remove the propeller governor and replace the gasket between the governor and the engine case. There is a fine mesh screen in the oil supply opening in the gasket which prevents dirt particles from entering the governor. I suspect this screen is dirty or otherwise partially blocked reducing oil flow to the governor causing the pump to cavitate. The problem corrects itself when the oil heats sufficiently to flow freely.

You can't just clean the screen, you must replace the gasket because the screen is integral to it. Another option is to change to a multi-viscosity engine oil. This will insure that during start-up and initial wann-up. the oil will flow more easily. In any event, I'd have a look at that gasket and oil screen.

Recently, Dean Thompson of Sandpoint, Idaho asked about an inexpensive method of removing frost without damage to the aircraft surfaces.

Something I've used that works well is a fifty per-

cent mixture of automotive antifreeze, ethylene glycol (Prestone, Zerex, etc.) and water. I put it in into a small spray bottle, and spray it onto the frost or frozen dew. The ice melts instantly! I also carry a supply of small hand towels to wipe off the residue.

This only works if the surface is otherwise clear -- it won't work to remove a layer of ice from freezing rain for example, or several inches of snow. Be sure to clean all of the wing surfaces top and bottom and the elevator and rudder too. With a fairly heavy coating of frost on a Cherokee, you can clean the whole thing in about ten minutes.

Also, Burlyn Pike of Shepherdsville, KY asked about his cabin heater problem. The cabin lieater valve is physically located at tlie bottom of the firewall at the rear of the engine compartment. It is really a bypass valve.

Ram air always flows through a jacket around tlie engine muffler and is exhausted through the cabin heater valve. When cabin heat is not needed, air flowing around the muffler flows through the heater valve and overboard. When cabin heat is needed. the valve shuts the overboard air flow and redirects the hot air into the cabin.

Air flow through the muffler jacket is important for cooling the muffler and it should not be blocked. If the cabin heat valve does not shut fully, some of the hot air will leak into the cabin.

Piper designed a spring to be attached to the valve lever to hold it tightly shut when cabin heat isn't needed. I suspect this spring has broken and was lost.

If lie were to look carefully at the lever ann that operates the valve. he will find a small hole in it for the spring attacli point. The other attacli point is on the airfranie near the firewall. He has a choice of going to a Piper dealer to get the part (good luck) or of going to an automotive parts store and getting a carburetor linkage return spring. A spriiig about 3/8 inch in diameter that can be cut to fit should work nicely.

Any Information On Water Ditching?

Jeremiah S. Bums, of Salem, Massachusetts, asked for information about water ditching in a Cherokee. The atiswer:

By coincidence, I got a phone call last year from a member with some interesting information.

His partner and a flight instructor suffered an engine failure shortly after takeoff and ended up ditching. Contrary to what most of us believe will he the eventual ending, the plane hit the water and the main landing gear then immediately acted as a fulcrum and tlie plane simply nosed over and did an immediate dive.

The entire episode was so quick that neither pilot thought to open the door and insert a shoe or other item to keep it open. Luckily, the flight instructor was able to kick out a windshield and both men escaped.

The moral: if a ditching appears imminent, prop open the door, hope for the best, but be prepared for a submerged airplane in short order.

Turbo Engine Differences

by Paul Ashwood

In my searching for a Turbo Arrow III I've run into an interesting dilemma. The Continental engine supplied with the original planes, the TSIO-360-F, apparently had problems from overheating aid over-boosting. These led to engines not making TBO and frequent top-end overhauls.

Continental addressed the problem with the modified FB engine. According to the April issue of AOPA Pilot, the new FB engine enjoyed an increase in TBO as aresult of stronger connecting rods. When J called Piper Aircraft to verify this I was told a "large bore" crankshaft was used in the FB and for more detailed information I should contact Teledyne-Continental.

However, an initial call to Teledyne-Continental's service department landed a mechanic who told me the crankshaft was made larger (larger bore) and tlie crankcase was modified to accept the larger bore, but made no mention of changes in connecting rods.

After rereading the AOPA article I placed a second call to TCM and was told the connecting rods on the FB were actually smaller (the head of tlie rod was reduced in size to mate with the larger crankshaft).

Meanwhile a used aircraft salesman told me he had a Turbo Arrow III with the stronger engine, something he called an FB-I, which had beefier rods, crankshaft and heavy crankcase. As it turns out, lie had it right.

A final call to the engineering department at TCM and I was put through to a sales representative, Loren Lemon. Mr. Lemon told me the FB has a heavier crankcase (part no. 642037), a larger bore crankshaft (part no. 643627) and connecting rods (part no. 646320) lie thought were a touch wider. He told me the TSIO-360-FB has continued to evolve and the new-FB has internal modifications not found in the originals.

Airspeed Indicator Glitch Discovered

by George Ewanchew

The airspeed can be an indicator which does not have real accurate cross-checks. Mine seemed to read low aid finally, after some time, would not register over 90 knots in a dive and 80 knots cruise.

"Simple enough," we all said (including good mechanics). Just blow out the pitot line. That is simple enough if you can get the pitot mast off after 14 years (Piper used screws in which the heads were rusted into globs). Some very careful drilling around that aluminum casting and a couple of hours later, the mast was in our hands.

Everything looked good there and in the wing. After much blowing-out still the same readings. No Problem, obviously the indicator is bad. Off it goes for overhaul. Well. $90 later, still exactly the sane A/S readings. Back to the shop goes the gauge - same readings.

Now we start consulting the "Experts", including

Piper at Vero Beach. No one has a real good answer, and most of the plumbing is pushed, pulled, disconnected, reconnected until I began to wonder if everything was anywhere connected the way it was when we started.

Still the exact same A/S readings.

But, while the months went by, and the pitot mast was pulled off and put on many times, in the search, the well-meaning investigators broke off both pitot heater wires at the mast so that we now needed two new heating elements which were supplied by Air Parts, Florida.

After all authorities were exhausted, Piper wrote the only place the problem could exist was in the pitot line from behind the AIS indicator. We gently blew in that line and the static instruments all went crazy as if they were being put under direct pressure.

Piper said that the only place in the pitot-static system where the two lines were together was the pitot mast. But, we could find no leaks in the mast itself.

In desperation, I finally bought a mast from Air Parts, but after installation, we still had the same readings.

So, we flew on at 80 knots until the next annual at Harpers' Keep-em-Flyin' in Clewiston, Florida. Bob Harper is a real pro, and after a half hour of standing on his neck under the panel, he discovered a plastic mounting bracket with two tubber hoses going into a small plastic box. One hose attached on the pitot line aid one attached to the static lines.

He had no idea what that box did, but from it ran two wires which went through a relay and disappeared in a wiring bundle.

Looking through manuals was no help, so back to Piper to describe this unit.

Now comes the question from tlie Tech Rep: "Do you have electric trim in your Archer?" Aha, after many months and many dollars, tlie answer was not reflected in those manuals.

Piper was concerned that if the electric trim rnotor should run away and could not be shut off for some reason, a pressure switch wit11 a diaphragm between the pitot and static systems would activate a relay wliicli in turn would terminate electric operations before the pitch trim got to the stops.

Hence, my pitot-static problems. If the diaphragm should rupture, pitot pressure would be applied directly to the static lines and put some pressure on the static side of the airspeed indicator causing those low readings.

Very simple now, but we went through much agony and abuse of the systems before this simple answer was obtained.

Post Light Cures Panel Lighting

by Mickey James

About five years ago I purchased a Cherokee Six. I had a problem with the lighting and did not want to spend a lot of money on the panel. My mechanic purchased a portable post light from Sporty's Pilot Shop for about $80.00 aid installed in on a permanent basis in less than an hour.

The mechanic tied the wire into a separate fuse so that in the event of a panel failure on my original lights, I could use the post light as a back up.

Total cost was less the $120.00. The post light was installed on the left side of the plaue between the front screen and the pilot's window.

The post light has provided me with all of the light I need for night actual IFR.

Improving Turbo Performance

by Nate A. Newkirk

In the spirit of helping other Turbo owners as you and they have helped me, this is offered.

OVERHEATING - I solved my bird's problems with three additions:

I. The Piper Cooling Kit.

2. The Insight Graphic Monitor. This told me that the standard CHT gauge isn't telling me the whole story. My engine wasn't running as hot as the standard gauge said.

3. The Merlyn Black Wastegate Controller. This thing is truly magic. On a hot day climb-out (800 fpm, 100 Knots) my CHT's are running 300-325. TIT is around 1400. At 2,300 rpm. 35 inches MP (all altitudes) 1 lean to those same temps, regardless of fuel flow, and am averaging 11 GPH overall.

I can't say enough good about Susanne and Hugh Evans at Merlyn. Hugh is incredible at diagnosing problems over the phone, starting with installation (which was quite easy).

Lately, 2-1/2 years after installing the Merlyn Controller, it developed a minor problem. Hugh figured it out over the phone, then offered to fix the controller free, and got it back tome within three days. Who could ask for more? Others can take a lesson in service from Merlyn.

Without a doubt, Merlyn's little gadget is the real secret to temperature control for my airplane.

Merlyn Products
W 7510 Park Drive
Spokane, WA 99204
800-828-7500

THROTTLE SENSITIVITY - Here's another place where the Merlyn Wastegate Controller has helped my airplane. Sensitivity is much less, at all altitudes, particularly the 8,000-13,000 feet range, where it was the worst. In IFR conditions, this is really important. One less thing to distract me.

OVERBOOST WARNING - That little yellow light isn't much good at the most critical time for overboost -- takeoff I'm too busy looking elsewhere. Two things have helped me greatly:

1. Using fingernail polish, I put a mark on the throttle quadrant, to indicate about where the throttle needs to be set to draw about 35 inches MP.

2. Bought a Radio Shack buzzer (Part # 273-075)

for $6.95. It emits a 95 decibel pulsing scream. Connected it to the wire going to the overboost light. When that thing goes off, you will pull back on that throttle! Why didn't the factory install such a device?

TACHOMETER ACCURACY - A year or so ago, I talked to the local FAA folks about installing a digital tach in my airplane, because I had a strong feeling that the mechanical tach was quite inaccurate. They told me it couldn't replace the mechanical tach, because it wouldn't show trend information. I couldn't see why it wouldn't, but knew I was in no position to argue.

Frankly, when I saw the announcement about Horizon Instruments P-1000 Digital Tach, I was delighted, Being a certified gadget freak, I bought it. I am glad I did. Here's why:

1. Installation was easy. It connects to the ignition leads. c

2. The factory tach was reading tow by about 175 rpm at cruise and climb settings.

3. No more need to do my arithmetic about mag drop. The P-1000 does it for me.

4. After one runup, its red trouble light was on. Why? I hadn't set the ignition switch to "both" after the mag check -- something I've done a time or two before without spotting it promptly.

5. The P-1000 told me that rpm tends to creep up 15-20 rpm on continuous cruise. Though I had never used the lock on the throttle-prop-mixture, de ided to try it. No more rpm creep!

6. During a recent trip to Florida, we were in clouds, bright sunshine, and darkness. The P-1000 was always perfectly visible (the indicator light dimming switch was helpful after dark). Those big numbers are always easy to read.

Wait until Horizon gets this gadget STC'd for PA-28's. Then you can take out that mechanical tach at the same time. Horizon Instruments, Ron Jacobs, 556 JS. State College Blvd, Fullerton, CA 92631 (714) 526-1919.

Wants Information On Air-Oil Separator

Pete Legan, of Ulysses, Kansas, asked for information about air-oil separators for his 235. The answer:

Air-oil separatorsare ingenious devices which are designed to eliminate blowby from aircraft engines through the crankcase vent tube. They operate well except in cases of extreme blowby (worn rings).

They are manufactured by Walker Engineering, 7335 Havenhurst, Van Nuys, CA 91406 (818-782-2154.)

These units have been STC'd for most Cherokee (PA-28 and PA-32 models) as well as for other popular general aviation planes and are in wide use.

Cost is approximately $250 and installation by your mechanic should run about two hours, according to the company.

Reports On Fixed-Pitch Black Mac Prop

by Tom Hill

I want too share some comments on my experience of installing a new fixed-pitch McCauley Black Mac prop on my 1968 Cherokee 180D.

After 24 years of nicks and dings it was time to replace the original Sensenich prop. I chose the Black Mac because of its additional diameter tolerance (up to one inch can be taken off of each end of the prop if needed) and no rpm restrictions. I was also pleased with the price and I looked forward to having a prop that was designed in my lifetime.

My first impression of the prop was its looks on the plane - great! Second, I had to do a double-take after starting the engine to confirni that it was running - there was no noticeable vibration felt in the cabin at idle or during runup.

Several pilots and instructors have spent a lot of time in my plane before and after the conversion and all of us have noticed a slight improvement in climb performance (approximately 50 fpm); however, we all concur that cruise speed has increased four to five mph.

I know that these are less than scientific observations, but since I did not expect any change in performance you can imagine my pleasure with improvements in both climb and cruise performance. I highly recommend the Black Mac to anyone needing a new prop for their Cherokee 180 or Archer.

Trouble Starting Cherokee Six

I recently sold my trusty Cherokee 180 and moved up to a Cherokee Six 300. I'm having a problem with the start up procedure under certain conditions.

The manual gives cold and hot start procedures, and these work fine for the initial start-up of the day or when the engine is hot. My problem occurs when I crank up the engine, move the plane a short distance (such as taxiing to the gas pumps), and then shut it down. Neither procedure works for the restart; the engine just folds and results in a difficult start-up. Any help along this line would be appreciated.

I installed anew set of Airtex carpet when I bought the plane. The quality of the carpet kit is excellent. but the installation is pretty labor-intensive (it took me about 12 hours to do it).

Some of the carpet pieces are oversized, so some trimming and fitting is required. Most of the pieces require cementing in place. Airtex sells the cement by the pint, but one pint isn't enough to do a Cherokee Six. Since their price for the cement is high ($8.00/pint), and since it's ordinary contact cement, I suggest buying a quart of good-quality contact cement from a local source. You'll come out ahead.

Finally, do you know of a source for the side cowling fasteners? I have tried salvage yards and several vendors of new Piper parts with no success.

Thanks for putting out a good magazine.

Sincerely,

Don McGohan
Osceola, AR 72370

Dear Don,

Thanks for the information about the Airtex upholstery. Airtex bas been around for many years and has a good reputation in the aviation community.

Obviously, it is not possible to be 100 percent accurate in diagnosing a problem over this distance - you did not provide many specifics concerning the problem. One possibility is that you may be experiencing vapor lock.

Apparently your plane starts just fine using either the cold start or the hot start procedures. The only problem occurs when the engine has been *run* and then shut down for a short time. In many cases, what happens is that heat builds up inside the engine compartment and actually boils the fuel in the fuel lines.

The cure -possibly slight rerouting of fuel lines to keep them away from exhaust components and other engine hot spots. Others simply wait a little longer before trying to restart the engine and perhaps leave tlie oil filler door open to aid cooling.

Finally, Ken Rickert. of Globe Fiberglass, recommends the following company for cowling fasteners as well as most other aviation hardware:

Skybolt Aeromotive,
551 N. Park Ave., Apopka, FL 32712
(407) 889-2613 (407) 889-8103 (FAX)

Pull Blades Through For Cold Start

by Doug Dunn

Pulling the prop through on a cold engine will make it much easier on the starter. The first blade will feel tight, each successive blade will loosen until about the fourth,

Our cold start procedure is: two shots of prime, pull eight blades (four revolutions) then Mag on LEFT aid it always starts on the first blade.

Don't do tliis when the engine is hot! Raw gas and a hot cylinder can fire with the mag off. Years ago as a lineboy, I was filling a Cessna 170 when the engine fired the prop over a couple blades. It really scared me!

As it turned out, the owner was shutting down by leaning, then as it started to quit. lie pushed the mixture in and shut off the mag. This would pre-load the cylinders for "an easy start" he said.

Remember, the prop is always dangerous!

Problem With Pressurized Case

I was recently contacted by a member who is having a problem with excessive blowby which he believes is caused by a pressurized case. He asked if I had heard of any pressurization caused by problems with the air filter - I had not.

Pressurization does occur in aircraft engines. First of all, aircraft engines, like automobile engines, can develop leaks past the rings. When this happens, excessive blowby causes higher pressure than normal in the crankcase which can force oil out. The cure, obviously, is an engine overhaul.

However, aircraft engines have another source of pressurization. The high speed of aircraft causes a rani effect at the front of the engine. A leaky front seal can cause high pressure to enter the crankcase causing a whole lot of mischief. The cure - generally replacing the front engine seal.

However, air entering the engine through the airfilter cannot cause case pressurization. That air simply goes through the carburetor into the combustion chambers of tlie cylinders. Even if the pressure is high the only result will be to force an additional amount of air into the cylinders creating a sort of supercharger effect.

This pressure is on the compression side of' the rings, however. It will not make any difference in tlie crankcase side.

Wants Engine Conversion

Tom Renner, of Vincentown, New Jersey, asked about 160 and 180 hp conversions for his Cherokee 140. The answer:

Right now there are two conversions which are possible. One is the Avcon conversion which puts a 180 horsepower engine with a constant-speed propeller in your plane. The conversion is expensive, running around S20.000.

According to Avcon, the top speed increases from 139 to 158 mph with cruise going from 133 to 150 mph. Climb increases from 600 to 950 fpm while the service ceiling goes from 14,300 to 17.700 feet.

Despite the cost, tlie conversion has been popular. especially with those living in mountain areas or who regularly fly from small airstrips. The gross weight is not affected. You can contact them at Avcon Conversions. P O Box 654, Udall. KS 67146 (316) 782-3317.

Also. it is possible to convert the engines of Cherokee 140's made before 1972 to 160 iiorsepower. This is done using new cylinders and pistons (the new engine cannot use auto fuel).

The STC is available from U. S. Propeller Service. I O Box 415, East Haddam, CT 06423 (800) 873-2388.

Once again, this STC does not change the payload characteristics of the plane.

Actually. the STC is for the airframe -not the engine. The engine is simply converted fro111 an E2A to a D2A by following the Lycoming overhaul manual, nitriding the cylinders aid installing tlie larger pistons. This change may be perfonned by any mechanic using a 337 form.

The STC allows this engine to be used in the Cherokee airframe. It is available for $250. It requires the propeller be re-pitched to 60 inches aid that the fuel tanks be placarded for 100 LL fuel.

Tracked Down A/C Problem

by Les Koelsch

There have been several articles written on air conditioning in Pipers and I would like to offer the following as suggestions for those with problems.

I had a problem with my air conditioning having a very small leak and would have to have frequent recharging in order to use the air conditioning system.

I spent more than $1000 in labor by having various mechanics and air conditioning experts trying to locate the problem. After several years of going through this, I finally decided to take a look at the air conditioning system myself.

I borrowed a snifter from one of the local air conditioning repair facilities and started my search. I finally found the problem behind a firewall where the high pressure line runs from the compressor to the rear of the airplane.

1 had to remove the carpeting and a small metal plate where the line passed through the firewall. When Piper designed the system, in order to go from the compressor to tlie rear of tlie airplane, they ran the high pressure line through tlie beat duct. It was at this juncture where the intense heat caused tlie hose to develop a very small leak.

The original Piper hose had a center core of plastic material and with this intense heat, it filially defoniied the material enough to cause this leak.

After locating tlie problem, the entire hose line was replaced and it was interesting to note that the design and manufacture of the replacement hose had a metal shield tiirough the entire area that would eliminate this problem.

It is quite surprising that Piper never did acknowledge a change in the hose that would allow Piper owners with air conditioning to check for possible leaks.

I do hope this infoniiation will be helpful to all of the readers with air conditioning.

Information On Seventh Seat

by Larry Shaw

I want to give you infonnation about tlie seventh seat modification. This spring I added the extra seat to my Six with no difficulty. I didn't even try Piper - I'm sure they have enough problems.

I got the seat, four mounting fixtures and belt parts from Wentworth Aviation for $350.00 plus $14.75 for shipping, handling and insurance.

I was having my interior done at Oxford (Maine) Aviation. so I had them recover, re-foam, and repaint tlie rather dirty seat for S125.00. They also did the installation for another $114.00 plus $33.90 for hardware. All told including tax $639.69. One could buy a very nice La-2-Boy for that. but it's not FAA approved.

The installation is very easy. The mounting fixtures just go into plywood like the otlier seats. The seat belt ends use the existing inboard attach fittings. Some attachment parts were missing from the used seat and required the expensive special hardware.

In my plane 1 had to swap the left and right center row seats to move tlie recline levers outboard to allow the new seat to fit. It really makes a bench seat out of the three and is a nice armrest when folded.

The only problem is that the rear leg ends are the wrong ones for the fixtures I got. They just screw in however, aiid Wentworth is sending the right ones at no charge.

Just like the otlier four seats, rear seat removal is a snap, and you need to keep the belts fastened even if unoccupied as it is the seat belt which restrains the seat in a crash.

By the way, my plane is a 1975 PA-32-300 without club seating.

Cured Hot Start Problem

by Janies R. Knighton

One problem which I was finally able to solve myself was that hateful problem of being unable to restart a Warrior after a short stop.

I tried all of the suggested starting techniques stated in your publication as well as an overhaul of tlie carburetor. Nothing seemed to work and for more than six months I was stranded every time I stopped for lunch.

Finally at annual time the intake air filter air box was opened to replace the filter. There it was: a handful of grass, picked up months before, providing enough resistance to choke the hot engine on restarts.

Since this time, I have flown more than 100 hours with not a single hot starting problem.

Landing Gear Questions

Richard J. Lahey, of Lindsay, Ontario, asked about pitted landing gear struts and about ill-fitting strut caps. His answer:

When the chrome on your gear leg ends up badly pitted you have two choices - either buy a good unit from a salvage yard or have yours re-chromed.

Rechroming can be done and members have advised us of at least one company which car1 do the work:

Industrial Plating Co., P O Drawer 2365, Anniston, AL 36202 (800) 525-6408.

Be careful about those scissor joints. Those washers are not just in there to take up slack. They are located in the joint in a special order to maintain wheel alignment. You cannot just add washers or change the arrangement without realigning your wheels. There should be some give in tlie joint. However, if it is excessive, you may have worn parts which need replacement.

The oleo pressure cap cover does not normally give much trouble - it is simply pressed into the round hole. If the caps are worn and can no longer be made to fit tight, they must be replaced (some members replace them with stainless steel units available at some plumbing supply houses).

Isham Arrow Kit Is Upgraded

For those interested in the Isham perfomlance kit for the Arrow, some changes have been made which should improve the quality and parts availability problems.

The kit extends the wingspan from 30 feet to just over 32 feet. The extension is now performed using extended wing tips - previously the kit utilized Piper-manufactured wing extensions. Previously, kit availability was dependent upon Piper factory parts which were often difficult to get.

The new parts are being manufactured by Globe fiberglass in Lakeland, Florida.

Before the modification the "fat wing" Arrow has a tremendous sink rate at reduced power. The extended wingspan provides a gentle sink rate, improved rate-of-climb, and increased cruise speed. Also, the extended wingspan and dorsal fin improve the appearance of the airplane dramatically.

The dorsal fin kit is FAA approved and available now The new extended wing tip project is currently in flight testing and should be available for production orders in November

For more information contact Isham Aircraft, 4300 Palos Verdes, Valley Center, KS 67147 (316) 755-0713 or Globe Fiberglass, 4033 Holden Road, Lakeland, FL 33811 (800) 899-2707.

Some Maintenance Tips From Warrior Owner

by Sam Levine

I have been an owner of a PA-28-161 since about July 1988 and do some of the maintenance of my aircraft with my mechanic checking it out afterwards. I have a few tips for our fellow Cherokee pilots:

1. Panel Lights: When the blue coating on the GE-52 panel light bulbs gets too gummy or you get too frustrated to remove and replace the bulbs I suggest the following:

a. Remove the plastic instrument panel front so you can get to the aluminum panel

b. Remove each bulb being careful to not push the lamp socket into tlie back of the aluminum panel. Take your time. This is very tricky.

c. Peel off the plastic coating on each bulb.

d. Paint the glass only of each bulb with a red Sanford "Sharpie" Permanent Marker.

e. Let the color dry for about one minute then reinsert the bulbs into the sockets (carefully).

f. Check out the lights to make sure all are working correctly.

g. Replace the plastic instrument front.

Materials: One Sanford red "Sharpie" Permanent Marker available in stationery stores. If you like the blue color of your lights you might try that color which Sanford also makes.

This results in an excellent red lighting of the instruments and is much easier to maintain. With the old blue plastic coating, the bulbs are very difficult to remove and almost impossible to reinseri

2. Intennittent Radio Problems: If you begin having intermittent radio problems, check the connectors on the backs of the audio panel and radios for dirt or corrosion on the connector pins or tabs.

My problem was dirt on all of the ridges of the Amphanol connector on the back of my King audio panel. This caused the overhead speaker and one radio to be intermittent. I cleaned the dirt off with an electrical connector spray cleaner available in hardware and electronics stores.

After spaying the contacts, wiping them clean with a Q-tip and reinstallation into the aircraft, both tlie speaker and radio have operated without further problems.

3. Door Holder Slide Bracket: I can replace the long spring wire in the door holder slide bracket of Warrior IIs. I think this same bracket is used on all Cherokees made after 1976.

Trouble shooting Lance Landing Gear

by Donald A. Tumer

Several months ago 1 sent you a letter requesting advice on how to fix the hydraulic system on my 1976 Lance so the nose landing gear would always go down and loch at speeds of approximately 125 knots. My log book indicated the hydraulic pump motor had been replaced twice by the previous owner due to the high limit pressure switch failing to turn off the motor. The motor ran continuously in flight until it failed.

I assumed that since the hydraulic pump motor had been replaced, that tlie pump must be putting out the right pressure. Consequently, I sent your magazine my problem and received a very helpful letter plus a phone call from two of your readers. They told me how to test a system to find the problem. As usual, after the problem was pinpointed, fixing it was easy.

To test the gear we put the plane on jacks and lowered the gear. As tlie gear lowered, a mechanic tried to stop the nose gear from going down. He stopped it by pushing on it with his hands. Next, we checked tlie nose wheel hydraulic cylinder to be certain that we did not have a bad cylinder. We did not, so we knew that proper pressure was not being developed or the pressure was being lost somewhere in the system.

Next, we felt that our problem was either in the hydraulic pump or the bypass valve was leaking. Since we had recently replaced the " O rings in the bypass valve we felt we should check tlie pump.

Previously, we felt the pump must be good because two motors had been replaced. This was a wrong assumption. The electric motor had been replaced twice without anyone running a bench check on the pump itself The output pressure was only about half of what it would have been so we had the pump rebuilt.

Upon installing the pump we found the nose gear was much harder to stop but we could still stop it with our

hands. We were puzzled. Our mechanic felt he should pressure test the bypass valve. Upon testing the bypass valve he discovered it was opening too soon.

Over the years, the spring had weakeoed a little so he adjusted the tension on the spring until the bypass valve does not open until the normal high operating pressure is exceeded. The mechanic reconnected everything and we retested the nose gear.

Now, when the nose gear is lowered, it will push you across the hanger if you try to stop it. In flight, we can feel the jar when the wheels hit the stops and we have "three in the green" every time.

To eliminate the problem of the hydraulic motor not turning off because the high pressure switch fails, I installed a yellow light on the instrument panel that is lit when the motor is running.

When we activate the lauding gear we expect this light to turn on until the wheels are positioned and then it should go out. When it fails to go out, we will pull the breaker on the pump to prevent the motor from burning up, When we want to lower the wheels we can turn the breaker or, and know we still have a hydraulic system that works,

Tips on Starting A Six or a Lance

by Donald A. Turner

1 read the article about trouble starting a Cherokee Six 300. We have a Piper Lance which is almost identical to the Cherokee Six 300. Here is what works for us every time.

Cold Start

- Prop set to high speed
- Mixture control full rich
- Turn on fuel pump for 5 - 7 seconds
- Turn off fuel pump
- Set mixture back to idle cutoff
- When engine fires, quickly move mixture to full rich

Hot Start

- Prop set to high speed
- Mixture control full rich
- Turn on fuel pump for 5 - 7 seconds
- Set mixture control to idle cutoff
- Note - Leave throttle wide open
- Engage starter
- When engine fires, quickly move mixture control to full rich and quickly move the throttle back to 1/4

Be careful. You must yet the throttle back quickly since it is set at full throttle.

If engine does not start after 10 seconds of cranking, set mixture control to full rich, turn on fuel pump for five seconds, let starter cool, and crank again.

After asbort run up, like taxiing to the gas pumps, use the hot start procedure. The engine likes to find any excuse to flood itself.

Solved Low Fuel Pressure Gauge

by Earl Smith

The problem on my 1977 Warrior was that my fuel pressure dropped to 1/2 pound with high flow of fuel during take off and climb.

After checking the electric booster pump, the engine driven fuel pump and after pressure blowing the lines all the way back to both of the fuel tanks I came to the conclusion that air must be getting into the system at some point.

I replaced the gaskets at the fuel selector valve and the gascolator with still no joy. Upon checking under tlie instrument panel the input line to the primer pump was found to be broken. Replacing this line fixed the problem.

This problem could have been very serious except for the excellent safety engineering by Piper engineers. The 1/8 inch copper line was so small that the fuel pumps could still maintain sufficient pressure as not to effect the engine operation in any way. No fuel was lost through the broken line because there is no fuel pressure at the gascolator which is the source of fuel for the primer.

Wants Pitot Tube & Hat Shelf

Our PA-28-140 is a 1972 model and we were trying to find out if we can add pitot heat. We would also like to add a "hat shelf' as ours is a Flight Liner model. Any information would be helpful.

Sincerely yours,
Rogue Aviation
St. Charles, IL 60175

Dear Folks at Rogue,

The pitot heat was an accessory on 1972 models. You can purchase a kit from Piper if it is still in stock. The part number of the kit is 757 004.

If you cannot locate the kit, you may have to try salvage yards or other sources to locate the individual parts. The heated pitot is part number 69-041-02 which replaces part number 65797-02, the non-heated pitot.

You will also need a switch (P/N 48771) and a circuit breaker (PIN 454658) as well as enough wire to complete the job.

As to the hat shelf, try Wentworth Aviation, 3015 Cedar Avenue South, Minneapolis, MN 55401 (612) 722-0065. They have a new bulkhead which really adds class (as well as some breathing room) to the early models.

Wants Painting Information

Robert B. James Jr., of Falls Church, Virginia, asked about information on painting his plane. His answer:

Randolph Products Company has an updated edition of a publication, "Aircraft Product and Application Manual" which gives a good start as to procedures and

amounts of paint needed to paint your plane. Copies of this manual are available free along with a paint chart which lists most Piper colors.

The manual includes many tips concerning stripping and painting an aircraft.

To get a copy, contact Randolph Products Co., P O Box 830, 701 12th Street, Carlstadt, NJ 07072 (201) 438-3700.

Wants to Repair Storm Window

Olga Cassella, of Rutland, Vermont, asked about repairing her storm window and replacing the knob. Her answer:

Unfortunately, I could find no source for new window knobs. Salvage yards would be a good source for this part.

As to the glue problem, I contacted Don Stretch at Airtex Products. Don said he usually uses lacquer thinner to good advantage. However, make sure you use a small amount ofsolvent and work slowly, checking for damage to the plastic as you go.

Incidentally, many people simply replace the window and go to the later-style frameless vent windows. Airtex carries these windows, complete with vent window and all hardware, for about $200. Airtex is located at 259 Lower Morrisville Rd., Fallsington, PA 19054 (215) 295-4115.

Oil Pressure Dance, New Glareshield

by Alex J. Lakatos

I wanted to share a couple of experiences that I have had with my 1973 Piper Arrow with other readers.

The first item is an oscillation that I noticed in the oil pressure gauge of my airplane. This was a small oscillation about the width of the needle itselfand was fairly periodic. It exhibited itself during climb-out and cruise, but not during taxiing.

Since the propeller of the airplane was recently overhauled, we suspected that it would most likely have to do with the propeller or governor. The propeller was ruled out, as were many other items by my regular mechanic. As the engine was still under a warranty by Penn Yan, who did the major about a year ago, my local mechanic suggested I go to Penn Yan for help.

After trying a number of things they finally discovered the problem. The oil line that feeds the oil pressure gauge has arestricted fitting in the engine block, which is supposed to dampen oil pressure needle oscillations. Penn Yan found that the fitting was the proper fitting, but the opening when compared to a new fitting was too big.

My regular mechanic did verify that it was the proper type of fitting, but did not compare the opening to a new fitting. By putting in a new fitting the problem was solved. Why I did not notice an oscillation before, I cannot explain. This fitting must have been in there since the major on the engine, since there is no way that I know of that a fitting can wear out. This part still remains a mystery!

The second item is a new glareshield that I purchased from Dennis A. Ashby Company. I am very pleased with the quality of the product and its appearance in my airplane.

Also, I am very pleased with the lighting that it provides my instrument panel as I opted for the additional option.

I did find one minor problem which I am going to bring to Dennis's attention. This problem is that the way the glareshield is constructed it can cover up half of your audio panel.

In my airplane, I will need to lower the whole radio stack so that the audio panel is not covered. Fortunately, I have space to do that. The other item is that the glareshield also covers up, to some extent, the gear-unsafe light and the gear-in-transit light on my Arrow. I feel that there should be some mention of this in the instructions, at least in the case of the radios because they would be easier to lower when the glare shield is off.

As far as the gear lights, I do not have a solution to that. It did take about six hours to do the installation, which came out beautifully.

Paint Touch Up; Black Glareshield

John R. Holthause, of Randallstown, Maryland, asked about touchup paint for his Imron paiot job and how to re-blacken his glareshield. His answer:

I posed your question to Bill Henshaw, of Randolph Products, Co. His answer:

"Our Randolph acrylic lacquer, available in 16 oz. aerosol cans and available in all Piper colors, is recommended for touch up on most substrate finishes, including polyurethanes, such as Imrou.

"Just make sure that the surface is clean and free of wax - a very light scuff will do."

Bill said he did not know of any finish that would rejuvenate vinyl. Some automotive products are available, but they would cause a high gloss and a bad reflection problem in the windshield.

Most Cherokees, however. have a fabric coating and some members have reported that this can be re-blackened using either Rit dye or an aerosol spray can of black dye.

Another member reported good luck dying black vinyl using an automotive type dye. In his kit the "gloss" was included separately and he did not apply it, thereby getting a flat surface.

Incidentally, Bill Henshaw is a Cherokee pilot and says he will be happy to make himself available in the evenings to answer painting questions after 7 p.m. EST. His home phone number is 215-449-3673, but let's not abuse his generosity - the man has to have a little time to eat and sleep.

Thanks for the assistance, Bill

Needs Rams Horn Control Wheels

Paul Spaug, of Ellco, Nevada, asked about changing to rams horn control wheels on his 1965 180. His answer:

Piper manufactures retrofit kits to fit older model Cherokees. Besides looking better the wheels eliminate the necessity forrepetitive inspections each 100 hours to check for cracking.

The wheels come in two flavors: 78729-02V for aircraft with 3/4 inch control shafts and 79276-00V for aircraft with 1 1/4 inch shafts. Your mechanic will need to check your Piper distributor for current price and availability.

The only other source would be to check with salvage yards to try to obtain a pair.

For more informatiou get a copy of Piper Service Letter 527D which covers the replacement.

Source of Gust Lock

by Larry Shaw

There IS a source for the gust lock. This was standard equipment at one time (apparently before a liability case caused its demise) and it can be secured from Wentworth Aircraft, 3015 Cedar Ave. S., Minneapolis, MN 55407 (612-722-0065).

In the case of the 1 1/8 inch OD control wheel shaft in the PA-32 the "plate" which the pin drops into is P/N 66931. The pin itself is PIN 66932 and the placard is P/N 66934.

Even in later models the holes line up so all that is required of your mechanic is to remove the wheel, add the plate (with longer hardware), drill the shaft, and then replace the wheel.

When drilling the shaft be careful not to abrade any wires. In terms of where to drill, observe the location of tlie stabilator drain holes: the leading edge should be low (and the aileron neutral).

In my case Wentworth wanted $15 for the plate. I made the pin myself and the A&P took two hours. It is certainly worth the money.

Problems with Dakota A/C

Jerome B. Lammers, of Madison, South Dakota, complained of short belt life on his air-conditioned 1979 Dakota. His response:

Your complaint is fairly common for owners of air-conditioned Pipers. The most common cause of shortened belt life is worn pulleys. The pulleys in the system must not permit the belt to rest on the tip of the V - it should be suspended by the pulley by the sides only. Otherwise it will permit the belt to flip over and self-destruct.

When checking pulleys, all three must be checked - the drive pulley, the driven pulley and the idler.

Several other causes may exist. The belt may not have the proper tension - 90-100 pounds as measured by a belt tension gauge. The pulleys may not be in correct alignment. Or the belt itself, may have incorrect dimensions.

The proper way to check these things and correct them is spelled out in service letter 903 which was issued by Piper in December 1980 and which applies to all air conditioned PA-28 and PA-32 models. So, as you can see, the problem has been around for quite a while.

Some Ideas From Frogmore

by Richard and Susan Beasley

We had our 67 140 prop re-pitched from a 58 to a 55. It made all the difference in the world in take off and climb performance. We lost a little on cruise speed, but we fly for fun. H & H Propeller in Burlington, NC did the work - a fine job at a competitive price.

Recently we had an FBO refuse to sell us aviation 100LL because we are STC'd for auto fuel. I contacted the FAA in Atlanta, GA. (phone: 404-994-5306.) Howard Robinson was very informativeand told me a ruling has been made whereby an FBO cannot refuse to sell aviation fuel to an airplane which holds a valid STC to burn auto fuel. They can tell you where to self-fuel your airplane and establish safety procedures for grounding and fueling within reason. To refuse you service is discrimination.

Planes using auto fuel do not pollute the atmosphere nearly as much as those burning 100LL simply because of the high lead content of 100LL. I have to burn 2,000 gallons of unleaded auto fuel to introduce as much lead into the atmosphere as ONE gallon of 100LL. That should explain somewhat the valve sticking problems experienced by many of our older 7:1 compression ratio engines which do not require all that lead.

Worried about vapor lock? During the hot, hot months we mix one gallon 100LL to nine gallons regular unleaded auto fuel. It does something to greatly reduce the chances of vapor lock. In reality, you have more chance of having a stuck valve than of vapor lock.

A couple of more tips: auto fuel does not store well. If you plan on storing your airplane and pickling the engine then fuel the tanks with aviation fuel.

Also, do not bum auto fuel purchased in the summer in the winter time or vice versa. The auto fuel producers add the appropriate additives to suit the climates and temperatures. It would also be wise to insure your carburetor has a metal float before using auto fuel.

For those of us living in the South, investing the extramoney in multigrade oil versus straight 40 or 50 weight aviation oil is not sensible for our older engines. If you really want to do your engine a favor change the oil five hours earlier than required. The multigrade oils are great if you live in a high temperature or experience extreme hot or extreme cold. That is what they are made for, right?

If you insist on a multigrade the Phillips 20W50 will do fine and is much cheaper. As for additives, leave them alone. All aviation oils have everything in them your engine needs for a long healthy life.

Make sure it is running at the proper operating temperature, not too hot and not too cold. Oils are designed to do their lubricating and cleaning job at a specific temperature range.

I have heard Marvel Mystery Oil does a fine job of keeping valve stems clean, preventing valve sticking and neutralizing crankcase acids. It is not approved for use in airplanes but like Terry and so many other light plane Guru's I just thought I'd mention it.

Plane washing: the Carbon X from Sporty's does, a great job, even on belly grease. Also did you know Woolite is very strong soap but has no corrosive or otherwise damaging characteristics?

Planning on redoing your airplane's interior? Most upholstery shops have a source catalog for FAA approved materials. We bought the material and did our floors and seat inserts for about $125 all with legal material. A lot of work? Not really. It was fun and we took our time and learned a lot.

About owner assisted annuals; here's another one for you: Masters Aviatiw located at Beaufort. SC (73J). IA Mike Muchmore knows his stuff from Cubs to turbo props, mechanics and electronics. The shop is well equipped and very clean. For an appointment call 803-525-1801

The rates are very competitive and you will learn a lot from a very nice and knowledgeable person with excellent credentials and a vast amount of experience on singles and twins alike. There are 3,300 feet of hard runway with food and lodging nearby. If nothing else, it's worth the dropping in to see the vintage Super DC3 operated by Beaufort County Mosquito Control painted in it's original colors. Absolutely beautiful...

Installed 180 hp With Fixed Prop

by Jon Paschke

I wrote about six months ago to tell you I had purchased an STC for my 1973 140 to put in a 180 horsepower 0-360.

This STC is from Avcon, Inc. (800-872-0988) and is for a fixed-pitch propeller not a constant-speed which they also have.

The STC I bought included all the baffles and hoses, air box, backing plate and spinner with necessary nuts and bolts. Tlie STC includes all the necessary paperwork, all your A & P needs to do is make a 337 and mail it in.

AVCON does not include the engine or propeller but there are several models of the 0-360 approved aid two different propellers approved.

Avcoo does have new motors and props available but I chose to obtain my own. I purchased a major overhauled engine from Chuck's Aircraft in San Carlos, CA (415-593-8403) and I couldn't be happier with the engine or the service from them.

I have close to 50 hours on the conversion now and I am one of the happiest 140 drivers around. The conversion was very straightforward and we ran into no complications whatsoever.

I bought an overhauled propeller from the propeller man, Trev Zander, (314-296-4157) and he gave me a very good trade-in on my old prop.

The only real draw back to the conversion was my airplane was down for five or six months, but during this tune I put in Bogart cables which are wonderful, Dennis Ashby's glare shield and all new windows from Jim Bradshaw of Knots-2-U. My current project is putting the wing tips with lights in them from RMD Aircraft Lighting on the Cherokee.

The old 150 hp engine had 2,440 hours on it and had served well but it rvas time to do something with it. I estimate the cost difference in going with the STC'd engine aid prop verses just overhauling the old engine to be around $5,000 to $7,000. Is it worth it? You bet. l'd do it again in a second.

Wants Some Strobe Advice

Delores Jewett, of Kent, Ohio, asked about installation of a strobe or strobes on her 1974 140. Her answer:

Strobes on the belly, tail or wing tips are probably a good choice for your plane. Generally, none of the strobes will cause problems in the cockpit. When flying in or near clouds there might be some disorienting liglit, but the same thing can be said about many rotating beacons. As you know, the standard advice for both strobes and rotating beacons is to turn them off when flying in or near clouds.

To get a good idea of what is available contact Whelen Engineering Co., Route 145, Winthrop Rd., Chester, CT 06412 (203) 526-9504. They have a catalog (catalog K) which displays their various units.

The tail strobe, is the only one likely to produce light in the cockpit under normal conditions aid Whelen builds it with a red lens facing forward to reduce "propeller reflection."

Problem With Slow Cherokee

Alfred H. Dean, of Falinouth, Maine, complained that his 1967 180 was slow and asked what to check before he had the plane painted. His answer:

The book figures for your airplane indicate that you should get 113 knots at 9,300 feet and 110 knots at 2,000 feet (TAS) at 75 percent power. With an engine in good condition there are three things which might be causing the lower speeds - tachometer, propeller, or rigging.

The first thing to check (it is the cheapest) is your tachometer. Have your mechanic check it for accuracy. If it is too fast, you are simply running your engine too slowly.

At 5,000 feet, you would achieve 100 knots at 60 percent power. You would be at this setting if your tachometer was off by 200 rpm.

The next item to check is your propeller. From your description it sounds like someone may have pitched your propeller as a climb propeller sometime in the past,

Normally your propeller would be pitched at 60 inches -that is, for every turn of the propeller your plane would move forward 60 inches (assuming 100 percent efficiency). A climb propeller would be pitched to 58 inches to give a better climb. However, a climb propeller takes its toll on cruise. While you get tachometer indications showing you have set power to 75 percent, the actual power developed is less.

One good way to check either of these problems is to check your fuel consumption. At 75 percent power your engine should be using 8.8 gallons per hour. If the bum is somewhat less, it means your engine is not developing 75 percent at the indicated settings. Either the tachometer is off or the propeller blades are pitched too flat.

And if both of these items check out, the third thing which can cause slow speed is improperrigging. If the flaps droop or the ailerons are pitched up (or down), they add tremendous additional drag and can slow down an otherwise finely tuned plane.

Incidentally, when determining your speed by loran, do not simply average your speeds on a round trip. This only works when there is no wind or where there is a wind directly on the tail or nose. A cross wind will completely invalidate any speed figures unless the wind factor is computed.

Strange Noises In Engine

I have a Cherokee 180C. The current engine is a T.W. Smith remanufactured 0-360-A3A. I recently had a ring break and had to replace the cylinder with a T. W. Smith Cermicrome cylinder.

Since the airplane has been returned it has astrange whiny sound (the first sound on the tape which I have enclosed). It is only there on start up until the engine starts to warm up.

Also, the oil pressure on start up goes just into the green and as the engine warms up the oil pressure increases. At warm cruise pressure runs at the top of the green.

When the engine is making this whiny sound there is a vibration in the oil line going to the oil cooler. The oil cooler is bolted on the firewall and seems to magnify the sound into the cabin.

When we put the new cylinder on we installed 50 weight mineral oil. Since then we have switched to 30 weight mineral oil. We have checked the oil lines, checked intake to the cylinders for air leaks and have tried a thermo valve off another engine. We also cleaned and checked all oil valves. Still we have the noise on start up.

1 do not know if the tape will be clear enough to pick it up, but there is a rattle or knocking sound at 2,450 - 2,475 rpm. This noise has been here at least 200 - 300 hours.

I change oil and filter every 25 hours. I cut the can open and have never found metal in the filter. So I do not really worry about it, but it is annoying.

Please listen to the tape and pass on any information you could.

Sincerely yours,
R. L. Barnard
Kent City, MI 49330

Dear Mr. Barnard,

Thank you for the tape. It certainly makes an interesting addition to my stereo collection. Unfortunately, as I am sure you suspect, it is just not clear enough to have much effect.

Based on your description 1 would have bet heavily on the problem being in the Veritherm valve, but, as you indicated, you have already switched valves with no result.

The noise seems to follow the rather unusual oil pressure situation - low oil pressure at start up and increasing pressure as temperature increases. You would expect pressure to go the other way around. It seems that you are on the right track in suspecting the oil system, but frankly I am at a loss as to what to try next.

As to the second noise, this in-flight noise could be caused by any number of things - vibration or noise from the valve system. Interestingly, most 180s are placarded against certain continuous operation, but the range prohibited is from 2,150 to 2,300 rpm, not the range you are having the problems in.

At this point it might be best to have other owners act the Sherlock Holmes part - usually other people have experienced similar noises and have some idea as to the cause and cure.

3-Blade Prop For Lance & Six

A three-blade prop conversion is now available for the Cherokee Six and Lance models, according to Hartzell Propeller, Inc.

The conversion was previously available for the Saratoga models, but an STC has now been obtained for these additional models, according to the company.

The conversion greatly improves takeoff and climb performance by replacing the 80-inch two blade prop with a 78-inch three-blade prop. The installation also reduces noise and provides greater ground clearance. In addition, it eliminates the repetitive 50-hour hub inspections required by AD 90-02-23 for Lance owners.

The conversion is available immediately in kit fonn and will come with the prop, polished spinner and STC paperwork. It will sell for $6,495 excluding freight. It can be installed by the Hartzell Service Center or by any qualified mechanic.

For more information contact Kris Bendickson at the Hartzell Service Center (800) 942-7767 or (513) 778-4201.

Bleeding Piper Brakes

By Terry Lee Rogers

There have been numerous articles written on aircraft brake systems and many are very good. Unfortu nately, few stop to explain a common complaint applicable to Piper brake systems.

The common scenario - the operator bleeds and bleeds the brake system. But no matter how long and how hard he bleeds the system, the brakes remain spongy.

This is a common problem which applies particularly to Piper systems. But the problem is not necessarily that an elusive air bubble cannot be purged from the system. The spongy condition may result from internal hydraulic leaks within the system and no amount of bleeding the brakes is going to help.

Let's take a look at the typical Piper brake system and see how it operates and why many operators have the spongy brake syndrome.

First of all, the Piper system uses three separate master cylinders to operate the brakes - one for the left toe, one for the right toe, and one for the hand brake. In each of these cylinders, there is a small but important seal known as the Dyna-Seal.

The Dyna-Seal is designed to seal off fluid flow in one direction. Without the seal, when you applied the hand brake the fluid would flow through the toe cylinders back to the reservoir and there would be no brake action. Also, the same result would apply with the toe brakes - the fluid from these cylinders would flow through the hand brake cylinder back to the reservoir.

Let's look at the diagrams of a typical PA-28 brake system.

How the System Operates

The Piper hand brake and toe brakes are in the same hydraulic system. The hand brake is shown in figure 1. The pressure line connects to both the left and right toe brake pressure lines which connect to the wheel disk cylinders.

When the hand brake is applied, its Dyna-Seal permits hydraulic fluid to enter the pressure line. However, Dyna-Seals in each of the toe brake master cylinders activate to prevent fluid from passing. In effect, the Dyna-Seals lock out the toe master cylinders.

Likewise, when the toe brakes are applied, the Dyna-Seal in the hand brake master prevents fluid from passing and the Dyna-Seals in the toe brake masters cause fluid (see figure 2) to pass from the individual master cylinder to its corresponding wheel cylinder.

This is the reason why you cannot pull the hand brake up when the toe brakes are applied and why you cannot use the toe brakes when the hand brake lever is applied.

It is a clever system which permits the hydraulic system to perfonn two duties rather than just one.

However, when one of the Dyna-Seals develops a leak, hydraulic fluid is diverted to the reservoir rather than to the appropriate wheel cylinder(s) and you get that spongy feeling. Note that only one Dyna-Seal needs to go bad to cause such a leak.

What you end up with is a system that acts like you have air in the system, but no amount of bleeding will help. The only cure - overhaul the master cylinder and replace that leaky Dyna-Seal.

Bleeding the Brakes

We have seen that bleeding Piper brakes cannot solve all problems with spongy brakes. However, whenever

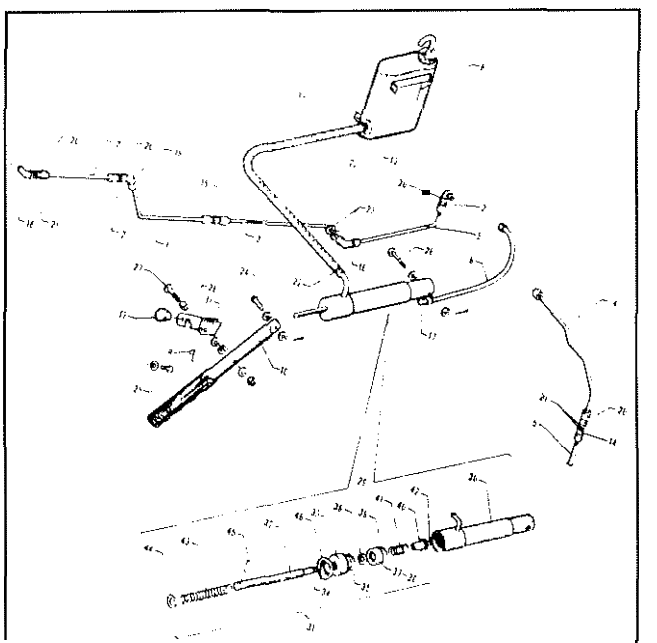

Typical Hand Brake (Arrow)
(#36 shows Dyna Seal)

air is allowed to enter the system, such as when brake cylinders are repaired or replaced, the system is going to have to be bled.

There are several ways to bleed the brake system, Your mechanic may use a pressure system which applies fluid under pressure from an air tank.

Assuming that you do not have a pressure bleed system available to you, you will be bleeding the system using one of two similar methods.

In one method, you put a short length of Tygon tubing (available at your auto parts store or at the local pet store - the kind used in fish aquariums). You want tubing with an inside diameter of 3116 inches.

Put one end of the tubing inside a partially filled glass jar of hydraulic fluid (use only MIL-H-5606 aircraft hydraulic fluid). Make sure the end is kept submerged in the fluid and attach the other end to the orifice on the wheel cylinder. Then pump both the hand and the toe brake until the bubbles stop. Then do the other side. When all bubbles are evacuated from the system, the system is properly bled,

The other method is simply a variation of the first. You simply use longer lengths of tubing - about 15 feet on each side of the plane - and run these two tubes from the respective orifices to the main fluid reservoir on the firewall.

Now pump both the hand and each toe brake until all bubbles are evacuated from both sides. The entire system has now been purged of air in one operation.

The only thing left to do is to tighten each of the bleeder fittings and remove the tubing. The job is complete.

Rudiments of the Electrical System

by Mike Peter

I have some useful information on electrical systems I wish to share with the members. On my Cherokee there is a panel mount amp meter provided by the Piper Aircraft Company when N6726J was manufactured in 1967. Most of, if not all, Cherokees have this amp meter. What does it do? Also, why does it always jump around'?

These are very common questions and problems I hear at AvTek from owners. First, the rudiment (101) of Electronics: voltage does not travel through wire. Current, or (free electron movement) is what flows through a conductor. Voltage is the potential (or the pressure) that when applied to a conductor allows the current to freely move within that conductor.

The instrument used to measure current is an amp meter. An amp meter for the most part will tell you nothing about the voltage in the system. Again, this discussion is about the rudiments of your electrical system; it's beyond the scope of this writing to go into greater detail of electrical engineering.

A voltmeter is much more useful in predicting gloom and doom while in flight than an amp meter. The source of your voltage potential is your aircraft battery. A healthy fully charged battery in a static condition (nothing turned on) should read, on a voltmeter, less than 13 volts and more than 12.5 volts. A reading of 12.65 is a good target number.

Many of you may read 12.0 volts to 12.5 volts. Where did you measure that voltage? A panel mounted voltmeter, probably! Again, I'm not talking about a current meter. If you have apanel mounted voltmeter, then you or the guy before you installed it.

You may very well read less than 12.5 volts at the panel, while a portable hand held voltmeter could measure 12.5 volts at the positive terminal on the battery in reference to the negative battery post. Should you read adifference in potential between the buss mounted meter and the battery post, this could point to the beginnings of an electrical failure. This difference in potential is called voltage drop, or IR drop.

A common electrical system failure is the alternator belt, and it is the easiest to troubleshoot. But I suspect you are not reading my writing if you have an "easy to troubleshoot" electrical problem. Until science gives us the "super conductor" we mortals will have to live with: conductors, semiconductors and resistors.

A good clean conductor, going from your two battery posts through your solenoid, master switch and avionics switch to reach your panel mounted voltmeter, and the semiconductors in your avionics, rnay read 1/10 of a volt less. Example: positive battery post = 12.65 volts, while the panel buss meter measures 12.60 volts, this would be acceptable. A voltage difference greater than this should be investigated

I must at this point make mention that the accuracy of your voltmeter could skew your troubleshooting I always carry two hand-held meters

The next step would be a dynamic test. Same test points: battery post of a fully charged battery and the buss. Create a load - a reading of 6.5 amps is a good load and conveniently located in your landing light. Now is when we bring in that current meter. Some people call it a load meter, or amp meter. With your engine off, master switch on, and only the landing light on (fuel gauges and turn indicators can't be switched off) you should measure 12.0 volts, but not less than 11.75 volts.

You need not run the landing light more than one minute, 20 to 30 seconds will give the information you'll need. You then need to run the engine with the master switch on, and everything else off Your current meter should now read 20 amps or more.

The current meter can also fluctuate or jump around. This is the regulator doing it's job. While you are running the engine on the ground or in flight. the current meter will be fluctuating. While the voltmeter should be more stable at 14 volts or greater, but less than 15 volts. Should your voltmeter read greater than 15 volts, your current meter will probably show large fluctuations. This is not acceptable. You need to troubleshoot the problem.

What should be clear to you is that voltage and current meters work together, but measure two different properties in physics. So a check list should be: if you measure less that 11.75 volts with the engine off and landing light on for 30 seconds, you have one or more cells in your battery that are dead or dying.

Get a hydrometer and check each cell. A reading of 15 volts or greater with the engine running points to a defective regulator. Large current jumps in the amp meter 20 to 30 amps after 30 minutes of flying indicated abnormal power draw. First place to check this would be the battery, cell by cell, with a hydrometer.

Then the next inexpensive step would be to look for an intermittent loose connection capable of delivering large amounts of current. Large amounts of current, 20, 30 or more amps should never be found on one wire on the buss in your panel.

Look at the starter cable and go back slowly, checking each connection until your reach the positive terminal on the battery post. It seems however that the first place people look at is the alternator, and they replace it. The weakest component in the alternator is the belt, and the wire to and from it. Please inspect it often. The most often misused phrase used by mechanics is "The diodes are bad".

I have beard many times mechanics referring to transistors as diodes. The alternator contains a bridge rectifier which consists of four diodes. The bridge rectifier's job is to convert alternating current (a/c) into direct (d/c).

Diodes can fail either by shorting or opening. A shorted diode will draw a large amount of current. But before you can see this large current on you panel amp meter, your field or alternator circuit breaker will pop open.

If one of the diodes opens, then the bridge rectifier will become defective and there will be no output. With no output your aircraft battery will be dead.

Has Solution For Alternator Belts

by Ricky Mackino

On alternator belts I have the answer. Gates auto belt # 9335 fits almost all Cherokees. I have run one on my 1973 200 Arrow for five years without a problem. I fit the belt the same as Piper's old ones that don't last

Simple Exhaust Pipe Check

by Reece Beasley

I keep reading in POM about power loss due to the baffles coming loose in the muffler of Cherokees.

If the proper tail pipe is installed it would seem almost iinpossible for the broken off piece of baffle to cover the exhaust pipe. As you know, the end of the exhaust pipe that goes up in the muffler has a "bail" on it which means two wires crisscross in bird cage fashion about an inch and a half above the top of the pipe which is intended to prevent the exhaust pipe beiug covered.

It would have to be a very small piece with Murphy's Law working at its best to get the exhaust pipe covered. The bail can be checked by laying down on the ground and taking a flashlight and looking up the exhaust pipe to see if the wire bail is in fact in place.

It is interesting to note that other airplanes exhaust pipes are identical to the Cherokees and cost about thirty dollars less, but the others do not have a bail on them. It is something to get on your back overbecause the extramoney could save your life..

A new exhaust pipe is about $75.00 PMA'd (1993).

Continental SB Potential Problem

For those owners of aircraft powered by Continental engines, Service Bulletin M92-15 may become the worse problem to appear on the horizon in years.

The bulletin affects about all 360, IO-360, IO-520 and TSIO-520 engines built or overhauled before January 1, 1981, and compliance could cost a bundle.

Basically, the bulletin calls for replacement of the "non-VAR" crankshafts in these engines whenever the engine is overhauled or whenever the crankshaft is made accessible for any other reason.

In 1981 Continental began using VAR (Vacuum Arc Remelt) crankshafts using a superior manufacturing process which eliminated impurities in the crankshaft metal. The newer, improved, crankshafts are not affected.

But for the owners of planes with the earlier crankshafts, the cranks will have to be scrapped at overhaul time.

Continental is making the cranks available at special prices. For example, a P/N 649134 crankshaft normally sells for $7,339, while under the new pricing program the crank is available for $2,222 exchange. You must pay full price and then the "core" charge is refunded when you return a "serviceable" crank.

One minor glitch: according to Continental, none of the affected crankshafts may be used in any application, ergo, what is the definition of "serviceable?" Probably, engine owners will be entitled to their refund unless the crankshaft has been damaged in some other way, as in a prop strike, for example.

Best Buv On Piper Part

by Ira B. Lewis

With further regard to the cracked trunnion on my Arrow nose gear, I developed another crack and decided that it was time to replace the trunnion with a new one.

I dug up the January edition of the Piper Owners' Magazine to find a parts supplier or salvage yard to supply one. I called J. T. Evans Aircraft Sales in Orlando. Florida, and sure enough he had a brand new one in stock: price $1,350.

This sounded excessive so I contacted the A&P mechanic that does my work, Harper's Keep 'Em Flyin' in Clewiston, Florida. They told me that they thought it could

be obtained cheaper.

To make a long story short, they contacted Piper and obtained one from their distributor. The price: $724,

The moral of the story - try the manufacturer first, you could be surprised.

Turbo Misfiring & Oil Loss Problem

by Stephen Wilson

I own a "77" Turbo Arrow with a TSI0-360-FB engine that was installed in 1978 as new.

I've had two problems to solve this year: a rough idle around the 900-1000 range that goes away at higher rpms and an oil loss through the breather at higher altitudes - 13,000 feet or higher (I lost four quarts at 15,500 feet in 15 minutes.)

I am an A&P and do most of my own work, but I enlisted the help of Jim Fahl of AFC Maintenance at Levermore, CA (510-443-0700.) Jim is an IA who bills himself as an engine specialist and used to work for Victor Aviation in Palo Alto, CA.

We did everything that we could think of for the idle problem. After determining that #1 and #2 cylinders ran cold at those lower rpms, we checked ignition, injectors, and intake system. We even checked the rise of cam for damage and measured the injector lines for size.

Finally, running out of ideas, Jim contacted Continental Engine and they said the back cylinders do not receive enough air at low rpms and sometimes in some engines will not fire. We spent many hours troubleshooting this problem.

A check of another Arrow and Seneca showed the same idle pattern - the newer model 360 engines have a balance tube to correct this. The factory recommended us to convert to a newer breather style for the oil loss per SB 80-18. This consists of anew front breather piece (the new one has the hole 180 degrees to the old one), and two hose connections on the engine cases and dumps overboard.

We also changed the front case seal (like you recommended in the October issue). The case seal is cheap, but the breather parts aren't. Continental sells a kit for about $320.00. I'm not sure what it contains as I bought the front piece new for $65.00 and got a used filler neck.

I test flew to 16,500 feet for 15 minutes with no loss of oil. I would recommend to other Turbo owners to check which style breather they have and to use caution going to higher altitudes until you can be certain you are not losing oil through the system.

I still have those pesky oil leaks at the push rod tubes where they mate to the case and some rocker box covers even with Real Gaskets).

A Source For Some Piper Parts

Having a hard time finding some Piper parts? A Wichita company says it has a Iot of excess Piper parts on hand.

Wilco, Inc. (800-767-7593 or 316-943-9379) reports it purchases Piper's excess inventory five years ago consisting of 32 48-foot hailers filled with parts - mostly vendor items.

The inventory consisted of more than 15,000 line items and the company still has much of it on hand today.

Fuel Valve Needs Rebuilding

My mechanic recenlly dismantled my fuel selector valve because the valve was not shutting the fuel off from the left tip tank when the plane was parked and the fuel selector valve was left in the right main position. The fuel from the left tip would run out on the ground from the right main overflow tube.

The mechanic determined that the five Teflon "0" rings in the fuel selector valve needed to be replaced. In calling around to Airborne and to Piper he was told that there was a kit available, but Piper had not released it. Me was also told that a replacement fuel selector valve could run as high as $2,000. This seems kind of ridiculous as all that is needed are five Teflon "0" rings or washers.

Any help you can provide would be much appreciated.

Ed Gohlich
Dewey, AZ 86327

Dear Ed.

This is a common problem on 235 and PA-32 models. Unfortunately, those are expensive four-position valves.

There is one company which rebuilds them and may be able to save you some money. At last report they were rebuilding the units for about $100. The company is:

Shaw Aero Devices
P O Box 80
Industrial Road
Wainscott, NY 11975
(516) 537-1404

Brake Bleed Trick

by Thomas Del Biondo

Do you want a cheap brake bleeder that works?

For about $10 buy aplastic insecticide sprayer, the kind you pump up by hand. Add hydraulic fluid and, presto! A pressurized brake bleeder for those hard-to-bleed Pipers.

Does it work? My FBO uses it now.

Where is Your W&B Data?

When you purchase an aircraft it comes with a lot of paperwork. Included, of course, is the weight-and-balance data for that airplane.

You must keep that weight-and-balance data inside the airplane when you are flying it to be legal, right? Wrong. The weight-and-balance data for your plane should be kept in a safe place - preferably under lock and key. What should

be in the airplane is a COPY of that weight-and-balance data.

If this sounds pretty elementary, just think of the problem you might have if that paperwork disappeared from your aircraft for some reason. This happened recently to a Canadian owner who now finds that he owns a plane with no way to accurately calculate the weight-and-balance,

That data is not easily replicated, so please, make sure that the original paperwork is kept in asafe place away from the airplane.

Build Your Own Gust Lock

by Jack B. Hemck

A gust lock for a Cherokee'? Here is what I did.

The materials required:

1) Your present tow bar

2) A piece of triangular metal with a quarter-inch hole at the apex and two other holes corresponding to the diameter and width of your tow bar.

3) I don't know what you call this... it is threaded inside to accept a quarter inch bolt and threaded outside to screw into wood. Let's call it "fitting X". It is available at lumber yards.

4) A quarter-inch wing nut.

5) A flat nylon bolt or the equivalent of sufficient length to secure the two control wheels.

6) A bumper cord of sufficient length to secure the tow bar to the flat belt.

The procedure:

1) Mount "fitting X into the plywood cover between the rear seats.

2) Place the tow baron the triangular piece of metal.

3) Fasten the triangular metal to the plywood "fitting X with the wing nut.

4) Secure the yoke with the flat belt.

5) Lay the tow bar on the flat belt with the handle of the tow bar forward of the control wheels. Secure with the bungee cord.

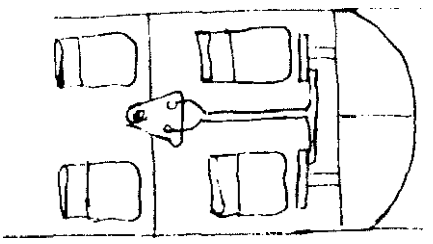

This neutralizes the controls and has worked well for me. You can protect the yoke by placing bicycle handle bar grips on the tow bar handle.

My first annual after I acquired my Cherokee the mechanic found a cracked aileron horn bracket which I attribute to locking the controls with the seat belt. It might be something for other owners to check.

Coping With Annual Inspections

by Terry Lee Rogers

When it comes to maintenance, annual inspections are probably only second to engine overhauls in the anxiety they inspire in pilots. But annual inspections can be the greater plague of the two because they come about so often...and so regularly.

Just about everyone has heard stories of heartaches caused when a simple annual inspection turns into a major repair operation running up mega-bucks in the process. And everyone hopes that his next annual inspection will not be another horror story in the same vein.

An aircraft owner, however, need not be simply a bystander in the process. By doing some careful planning and research, an owner can do a lot to influence the outcome of an annual and the tally of the final bill.

Getting agood deal involvesmore than simply calling a few shops and getting estimates, however. Such estimates are, for the most part, meaningless. They simply tell you what it would cost, at the local shop rate, to go over a thoroughly clean airplane. Unfortunately, it is rare that some glitches do not surface during the course of an annual inspection.

Ironically, the "cheapest" annual quote could end up costing the most in the end.

The First Annual

The first annual of an aircraft is often a shocker to its owner. Some experts say to budget about ten percent of an aircraft's purchase price to cover the cost of the first annual. Why so much?

First of all, the former owner of that plane probably was considering selling it for some time. He probably deferred what maintenance he thought he could get away with for months or even years.

Even if you purchased a plane with a new annual at the time of sale, you are not necessarily off the hook unless the plane was inspected by someone you know and you supervised that annual yourself. If the seller's mechanic did the inspection, there may have been a number of mar-

Secondly, your mechanic will want to bring a new plane up to decent standards when he first begins to work on it. Look at the situation from his standpoint: here he is, presented with an airplane he knows nothing about. He has not worked on that plane, he does not know what AD's have been complied with, and lie does not know what type of preventive maintenance may have been performed over the years.

He will have to research all of this, spending time examining the logbooks for both the plane and the engine as well as going over the airframe with a fine tooth comb. This takes time and time is what equates with money.

Presumably you will be using this mechanic for some time and his choices are to be honest up front and do

the annual properly and charge accordingly, or to deal with you later when things break and need repair shortly after the annual. Then he will have to answer the question, "why didn't you bring this matter up before'?'

No one likes to be the hearer of bad news, but most mechanics have found that it is much better to get the glitches out of the way up front than to try to deal with them down the road.

Coping With AD's

AD compliance can be a substantial part of the cost of an annual. You probably have already noticed that many AD's are worded so as to clump them together at annual time. They state that compliance is due at the next annual or within 100 hours or use some similar language.

Even old AD's can be a problem. If an AD is several years old it should have been taken care of previously, right? Not necessarily.

Some AD's are so oebulously worded it is difficult to determine whether they apply to a particular plane. They may refer to a part manufactured during a certain period. If the mechanic is unsure of the age of the part or of the applicability of the AD, he may decide compliance is the most prudent path.

Here is one area you may be able to save yourself some money. Read the AD yourself to see whether it applies. If necessary, call the manufacturer of a part to determine whether it is part of a series covered by an AD.

Just be aware that it is certainly possible for non-applicable AD's to be charged to your account by mistake.

Complexity & Airframe Age

Obviously, the more a mechanic has to check, the more time he needs to spend and the more money he needs to charge. An Arrow obviously is more complex than a Cherokee 140 or 180. That gear system needs to be gone over at annual time and the owner needs to pay for it.

With new airplanes out of the question for most people, we are dealing with older and older airframes with some of the earliest Cherokees having airframes 30 years old.

Unfortunately, the olderanairplane the more likely glitches are to develop - corrosion, crankcase cracks, worn out brake discs, and brittle hoses are more likely as each year passes

Also, as time goes on, an airplane may be stricken with other problems. Low compression, requiring partial or complete top overhaul, can strike at any time. And it is a possibility each time you take the plane in for its annual. Unfortunately, for turbo owners, it is more likely than not that top end maintenance will be required.

Selecting a Shop

Choosing the shop for your annual is a major decision which should not be made in a cavalier manner. It is said that the best way to drive up the cost of an annual is to change shops. No matter how good the annual this year, if you change shops next year you will run into another expensive annual inspection.

Each shop does things a little bit differently. And when you switch shops, you once again present a mechanic with an aircraft he has had no experience with. Once again, he must research the logs, check AD compliance, and check overall maintenance, often dwelling on correcting his own pet peeves.

So, to save time, money and frustration over the long run, you want to get it right the first time when you select a shop.

First of all, try to select a shop which specializes in your type of plane. Pipers are fairly simple planes and most mechanics are pretty familiar with them. Still, a mechanic who prefers to work on a Piper than a Cessna will be more familiar with your plane and more effective in his trouble-shooting.

Another shop to avoid is one which does good work, but which specializes in business jets or cabin class planes and which tends to shuttle the small planes out of the way whenever there is big iron to work on.

Talk to the mechanic and find out what type of planes they work on and, more importantly, what kinds of planes they like to work on.

Be sure to talk to other Cherokee owners in your area to see where they take their aircraft and what experience they have had. Ifnecessary, put aoote on several Cherokees asking tlie owner to call you to talk about maintenance. You would be surprised how freely most aircraft owners are to share information - especially if they think they have found a gem in the dust.

Comparing Rates

If airplanes were glitch-free, determining the cost of an annual inspection would be simple. But, as with most things in life, it does get a lot more complicated than that.

Most shops in the country have gone to a flat rate structure for annuals. Basically, the shop is aware of how long it should take for an annual - the time necessary to remove access panels and make the required inspection and then to put it all back together again. The amount of time - say fifteen hours for a 140 - is then multiplied by the shop rate - say $10 an hour - and Presto, the annual will cost $450.

Unfortunately, you have no way to know exactly what this fee covers unless you ask. For example, the oil needs to be changed during the annual. Some shops include this in the annual price. Others charge separately for parts while others charge separately for parts and labor.

Does the price include a logbook sign-off by an IA? Some shops do not have an IA or have one who bills his "inspection fee" separately, thereby adding another $50 or

so to the bill. Is there a separate charge for washing the aircrali?

Shopping for the lowest low-ball price for an annual will seem silly when major glitches are discovered and the price mushrooms.

What shop rate will the shop charge you for making repairs'? How interested is tlie shop in discussing with you the method of making repairs? Do you have faith in the particular facility?

Remember, once a shop has disassembled your plane for the annual you are in a very poor bargaining position to take your plane elsewhere for a second opinion on maintenance questions. Unless you can simply taxi across the field to another FBO, you are stuck with a non-airworthy aircraft which will need to be buttoned up and also will require a ferry permit to go anywhere else. For all practical purposes you are stuck with tlie facility you begin with.

The Owner-Assist Annual

One way to save money and, more important, to really get to know your plane inside and out, is to involve yourself in an owner-assist annual. Unfortunately, only a few shops permit owners to help out during tlie process and it may take some time to find one in your area. The rewards can be great, however.

During an owner-assist annual, the owner removes all access panels, upholstery and cowling. He is tlie one who must fight with hard-to-remove screws. He generally also must furnish his own tools for his part of the inspection. In short, lie is the one who does the grunt work.

He also gets to assist and be there when the inspection is made. Tlie mechanic will point out not only what things are being repaired or replaced, but will point out those things which bear future watching. In short, the process can be highly educational.

Financially, the aircraft owner can save several hundred dollars, but this may not be tlie big gain - especially if the owner's time is worth more than the shop hourly rate. The big payoff conies fro111 learning something about an airplane that can be taught only by a competent mechanic.

Some Things to Watch For

When you select a shop to do the annual, you are looking for a shop you will feel comfortable with over a long period of time. As we said, it is quite costly to change from one mechanic to another each year - you want one you can stick with.

The best way to find out who you can trust is, as we stated, to check with other Cherokee owners in the area and find out who they are satisfied with. But are there some other things you should watch out for? Yes.

1) Make sure that the shop will consult with you before undertaking major repairs. You should be called before any work is performed which costs more than a predetermined amount - say $50.

2) Ask the shop to save any parts which were replaced (unless a core charge is involved, of course). Even though most shops have enough bad parts in the trash can to allow them to have something to present to you even if nothing was replaced on your plane, it is a precaution which will certainly show the mechanic that you are interested and paying attention.

3) Make sure you can specify the brand names of parts used during repairs. If salvage items are to be used, make sure that you have a hand in making that decision.

4) Try for a shop which will permit you to attend. Even if it is not an owner-assist annual, you should be permitted to be there - if not in the shop itself, nearby and able to see what is happening to your plane. What you do not want is a situation where the plane goes into tlie operating room aid simply emerges from intensive care later with you having no direct involvement other than paying the itemized bill.

Keeping the Cost Down

The best way to keep the cost of the annual inspection down is to correct glitches before the inspection. Anything your mechanic finds wrong, he will need to correct. He will replace spark plugs, batteries, landing lights, tires, and anything else which is worn or broken. Remember, it is his job to insure that the aircraft is airworthy before lie signs it off

When your mechanic replaces parts, he must charge you full retail price as well as charge you the cost of installation. He is in business to make a profit - you cannot begrudge him a living.

But if you replace those items that you can - as part of your preventive maintenance program - you will not only save tlie shop labor involved with replacing them, you will be able to purchase them at a 30 to 40 percent discount from mail order suppliers (make sure you have a recent copy of Trade-a-Plane).

The annual inspection, like death and taxes, is sure to remain with us for a long time. But by doing a little planning it is possible to make tlie event, if not fun, at least a lot less traumatic.

Suggestion on Engine Noise

by John P. Sandlin

Regarding the strange noise recently reported by a member in his 0-360 engine I believe the problem is a partially blocked, obscured or pinched oil pump suction line.

When the engine and the oil is cold, the high-viscosity oil cannot flow freely to the pump suction; the pump then cavitates causing tlie whinny sound. When sufficient oil passes the blockage, the pump fills and then discharges causing the oil hose on the discharge side to vibrate (pulsate).

This cycle continuously repeats itself until the oil warms, the viscosity drops, and the oil then flows freely

around the obstruction. The obstruction could be from carbon and sludge buildup or some debris trapped in the line.

Remedy: the oil pump suction line should be opened, inspected, and, ifnecessary, mechanically cleaned. There is also a possibility of an air leak into the suction line. Mr. Barnard might consider replacing the oil hoses to and from the oil cooler. The hoses may have been damaged by the pressure pulses which he described as vibration.

Dear John.

Thanks for the suggestion.

Another possibility was suggested by a friend of mine. His plane, too, had a strange whinny sound in the cabin. It turned out to be the oil line which went to the Hobbs meter. Oil pressure caused the line to vibrate wildly causing the whinny sound.

Unfortunately, this is one of the reasons it is often hard to diagnose these problems - often similar indications are the result of different problems.

Nose Bowl Mod For Cherokees

Anyone waiting to remove the nose bowl on an early Cherokee knows that there is a major problem involved - vou must remove the propeller to get the iob done.

There is, however, a cure - a split nose bowl STC. The STC is available from Aviation Development Corp, 1305 NW 200th Street, Seattle, WA 98177 (206) 546-3011. Tlie price is $175 plus shipping costs. Tlie modification cuts the bowl horizontally eliminating the necessity of removing tlie propeller.

New Modification Kit For Cherokee Arrow

Isham Aircraft has announced FAA certification of a new kit which improves performance and looks of the short-wing Piper Arrow. Tlie kit extends the wingspan two feet, extends the dorsal fin and adds new recognition lights.

The company claims performance improvements in rate-of-climb, cruise speed, ı-educed stall speed and a reduced power-off sink rate because of the new 32-foot wingspan. According to the company, the additional wing area puts the Arrow "on the step" and reduces wing loading.

Also, according to the company, the kit will save fuel: the added rate-of-climb requires less fuel to altitude aid the added cruise speed burns less fuel point-to-point.

Whelen recognition lights provide a safety benefit. Day or night other pilots will see the Arrow much easier and quicker, according to tlie company. Tlie lights are molded into each wing tip providing a factory look. Each halogen light assembly weighs just over two ounces aid draws little power when compared to a conventional light.

The wire follows the existing aircraft navigation light wiring.

According to the company the installation should be quick and easy with no exotic tools or talents required. Step-by-step instructions are included.

The kit will increase performance and looks of the aircraft without "cobbling up" the airplane, according to Isham. The production of the kit is a joint venture between Isham and Globe Fiberglass, of Lakeland, Florida. Globe Fiberglass is recognized worldwide for its durable, excellent-quality Piper replacement parts.

The price for the kit is $2,195. For more information contact Isham Aircraft (316) 755-0713 or Globe Fiberglass (800) 899-2707.

Some Ideas On Engine Problems

by Marvin Merryman

I read of recent members' problems with their engines and have what may be some solutions.

First, the fluctuating oil pressure. I have seen this same symptom several times before and it certainly does not harm your engine. The cause, I believe, is not the vernatherm (viscosity) valve on the back of tlie engine. The culprit, I believe, is the oil pressure relief valve on the side of the engine.

There are two types of oil pressure relief valve housings used on these engines: a "top hat" type and an outside adiustable valve.

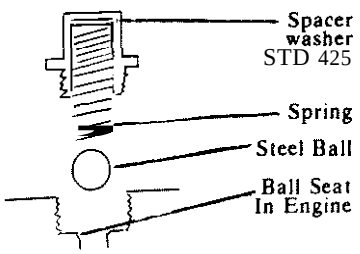

The top hat type has a housing that looks like a top hat screwed into a boss on the side of the engine.

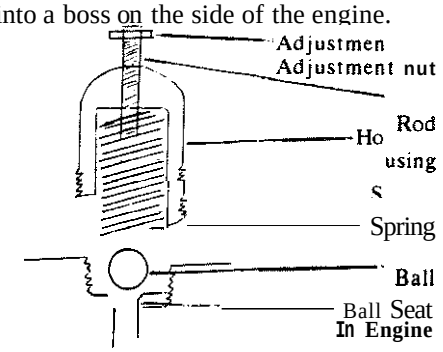

The valve can be adjusted by adding up to a maximum of nine STD-425 washers under the cap, on top of tlie spring, to raise the pressure. Your problem is that due to the viscosity of the mineral oil and the flow capacity of an overhauled oil pump, the relief valve ball is held off its seat very high. The result is a lot of bypassed oil and pressure.

As the oil warms up the valve must (can) return to its seat and begins to regulate the oil pressure normally. This problem is aggravated (sometimes) by the interior of the cap becoming ridged by constant contact with the spring. This

tends to make the action of the spring sticky and erratic.

To further aggravate the problem, the spring often gets sharp edges which further tend to hang up the spring action.

The big problem with all of this is the possibility of a reverse action when the spring sticks in the compressed condition. Then the oil pressure drops significantly with increased temperature and lower rpm.

The cure is to replace the spring and smooth the internal bore of the cap. You may have to juggle space washers to get the proper oil pressure with the new spring, but starting with the original number of washers is probably the best bet.

The second type of relief valve is a newel- style and is adjustable with a wrench from the outside of the valve, No spacers are required.

The relief valve consists of a domed assembly with a threaded rod protruding through the dome and a nut pinned to the rod. Adjustment is obtained by turning the nut and rod in to increase the pressure and out to decrease it.

The problem with this assembly is identical to the top hat style, i.e., a sticking spring due to sharp spring edges and worn ridges on the inside of the dome assembly.

I have seen engines that nothing really stopped the cold-low oil pressure and warm-normal pressure condition.

Sometimes a ball has deposits on its surface and the seat in the engine also gels dirty. Be careful cleaning the engine seat. You do not want to hurt the seat surface or let any foreign material get into the engine.

As to the whirring noise, it could be the alternator, the alternator belts or a damaged pulley.

Check the belt, alternator and pulley alignment to insure that the belt isn't running crooked and loading the alternator bearings. it could be bad alternator bearings.

It could also be a starter which, due to a sticking drive assembly, does not fully retract the starter gear from the ring gear until the rpms raise up for taxi or run up or possibly the starter gets hot which allows the gear to unstick and retract. Fix this now - it will ruin the starter and ring gear.

I hope this gives you some ideas or solutions. One other thing - on the whine problem. Make sure it is not coming through the speaker or headsets. If so, it is a11electrical interference problem. Check for damaged or failed filter condenser on the exterior of the alternator about three inches long and two inches in diameter, silver in color with one lead coming from one end.

Fluctuating Alternator Cause Found

by Chris Skudder

I'm the Cherokee driver with the intermittent oscillating alternator output who went to the poorhouse shotgunning it. Many thanks to the nearly 30 CPA people who called or wrote offering great advice and much consolation.

The fix came from Light Plane Maintenance magazine. Being a subscriber, a letter to John Likakis brought a phone call. John put me in touch with a wizard mechanic named Alan Speakrnaster and it's fixed.

First the fix, then the detail. It was the overvoltage relay (OVR), which was replaced a month before the problem arose. The BIG LESSONS:

I. Put a test point in the field circuit and watch the field voltage with a sensitive analog meter while flying BEFORE ANYTHING ELSE!

2. And as usual, the first thing to check is the last thing you touched.

Alan is adamant about learning before fixing. Among the 30 guys I talked with each had seen a different cause to a similar problem. What was so different and fantastic about Alan's suggestion was that it separated parts of the system, testing the field and output independently. without spending any money!

On his suggestion I built a battery-powered rheostat controlled alternate field circuit on a double throw switch to flip between the plane's field circuit and the independent one. Watching the field and buss voltages while flipping the switch, it was immediately clear that the problem was in the plane's field circuit.

As it turned out, just watching the field voltage (between regulator and alternator) while flying would have done it just as well. The field sat at 0 volts and spiked up to 10 volts about once a second in a very fast sub-second excursion.

The buss (which is the input to the OVR) was basically stable. It was easy to read on a fast meter, but just a little nudge on a damped meter. Radio Shack's 15 volt DC panel meter at $6.95 is terrific. And of course it wouldn't do it except in the air.

Next, a voltmeter and a bypass switch across the overvoltage relay. The voltmeter showed 0.2-0.8 volts and unstable. Field voltage, buss voltage, and output amps all went rock steady when I closed the bypass switch. So for the first time there's solid evidence to recommend changing a part. A new OVR fixed the problem, almost $2000 and eight months late.

The plane now has permanent test points on the field and buss and I have a handy dual-meter panel to plug-in in a second should anything else appear. I hope this won't happen, but I have had occasional unexplained altemator failures before, where everything checked OK by the time I'm on the ground. If it happens again I'll have a very good idea of where the problem lies.

The battery-powered field circuit used a 12-volt battery (car or plane), a panel light dimmer from a Baron (from a mechanic's junk box), and a hardware store double throw switch.

Start with the dimmer OFF or low, and a voltmeter on the buss prevents roasting equipment while you're adjusting the dimmer. Then a second (identical) V-meter on the field and you can see EVERYTHING.

Lessons: Look at the field V while you're flying;

and the last thing touched is the first thing to check. My subscription just paid for itself many times over. Many thanks to you. to all of the CPA guys who helped out, and to Alan.

Shoulder Harnesses for Cherokees

by Terry Lee Rogers

Just about everyone realizes the importance of shoulder harnesses in saving lives. Every aircraft built in the U. S. since 1978 comes with a factory-installed harness. Even all automobiles sold in the U.S. have them, unless they come with air bags instead.

Unfortunately, the FAA's rule mandating shoulder harnesses came about just before the bottom fell out of the general aviation market. As a result, the lion's share of aircraft do not have them.

Luckily, there are some alternatives which permit owners to retrofit harnesses. Let's take a look at the current state of the shoulder harness situation.

Why We Need Harnesses

Seat belts have done a nice job in aircraft and in automobiles in restraining people during a crash. It has cut down on injuries and saved many lives.

Unfortunately, the saving is often in degree - a person who might otherwise have died, receives serious injuries. Tlie end result may be a wheelchair rather than a coffin. This is not a had result. but shoulder harnesses make the human cost far less.

Simply put, if you are involved in an aircraft accident and are wearing just a seat belt, you ARE going to strike your head on the instrument panel. And head injuries are the leading cause of fatalities in small aircraft crashes.

Many of us remember what it was like as a child driving with our parents. Let's see what was going on with a typical driver of the period; we will call her mother.

In the years before Ralph Nader no one thought much about crashes and there was little or no safety equipment on cars.

Children would sit (or, heaven forbid, stand) on the seat oblivious to all danger. When mother detected a possible hazard she would put her arm across the seat to keep the child from flying forward and striking the dash.

Unfortunately, although this tactic might have given a parent a sense of security, the procedure would do absolutely nothing to prevent injury in case of an accident. What mother never realized is tlie extent of force generated during a real crash.

During a crasli, forces of eight to ten G's are not unusual. If a human arm weighs in at 15 pounds this means that a force of 120 to 150 pounds will attempt to flail that arm forward. How many people could resist a sudden 120 pound force applied to their arms.

In fact, not only could mother not have prevented her child from slamming forward during a crash - she could not have controlled any of her own extremities or body parts. Everything would be driven forward at tremendous force.

Unfortunately, the upper torso, if unrestrained, would be stopped not by a shoulder harness, but by hard metal or plastic components which would then inflict serious injury.

Tlie same principle applies to aircraft. Restraining passengers' upper torsos saves lives and injuries. Period.

It was once thought that human beings could not survive any serious crash - tlie deceleration force alone would kill them. It turns out, however, that the human body is far more durable than that. Testing has shown that humans can survive up to 40 G's of deceleration. It is the "second crash" that kills - that is, the body striking parts of the interior. And that crash is what shoulder harnesses are designed to prevent.

The Factory Solution

Up until 1988, Cherokee pilots wishing to add a shoulder harness system were forced to try to fit off-the-shelf items into their planes. Such a system was unapproved and haphazard at best.

Even trained A&P mechanics may not be great at designing a system from scratch. I am familiar with one installation - it was on an Ercoupe - in which tlie harness was attached with rivets only. There was no additional support in the fonn of a doubler added.

The owner of the aircraft questioned the durability of the installation and was told it was perfectly sound. The rivets did not look durable, but during a crash they only had to hold for a second or so.

That plane was involved in a crash and, as you might expect, those rivets did not hold for even a small fraction of a second. The harness offered no protection whatsoever. Luckily, although the occupants of the aircraft received facial injuries, none were life threatening.

Currently, Cherokee owners have two sources for kits. Piper Aircraft Corporation, in 1988, issued Service Bulletin 896 which announced the availability of retrofit kits. Generally, kits are available for all models and include belts for the front two seats or for all seats, depending on the kit selected.

Prices vary with kit, of course. One popular kit is 765-383 which fits the aft seats of many PA-28s. The cost for that kit is $344 and it should be fairly representative.

What are the advantages of going with a Piper kit'? Well, they were designed by the tnanufacturer to do what they are supposed to do. And in case of an accident you certainly want an installation which has been tested and proven to be effective.

Another Source

Numerous companies offer retrofit kits for Cessna

products. Until now, however, there have been no non-factory harness retrofit kits for Cherokees.

Wag Aero, however, now offers kits for the PA-28 series. The harnesses are available in any of eight different colors -black, navy, brown, royal blue, red, tan, green or silver gray. The kits cost $219.50 each and one is required for each seat (they say the kits will tit any of the four seats aboard - sort of a one size fits all philosophy.)

According to Wag Aero the kits are FAA approved with both STC and PMA approvals. They come with installation instructions.

They can he ordered from Wag Aero, P O Box 181, Lyons, WI 53148 or call 800-558-6868.

How About Installation?

Installation o f a shoulder harness kit is not a simple matter. You need to get through the headliner to gain access to the plane's outer skin. Then you need to position the kits, drill the appropriate holes, and then rivet the units into position, with one person doing the riveting and another holding a buck. Finally, after the installation is complete, the headliner needs to be restored to its former condition.

Piper estimates four hours for one belt, eight for a pair, to get the job done and that is probably a reasonable estimate.

Finally, there is one last alternative - a harness manufactured by Jack Hooker, called the Hooker Quickie. This harness, available for under $30, consists of a V-type harness which attaches to the rear seat safety belt.

The price is certainly reasonable and, of course, there are no installation costs involved, hut there are two major disadvantages: no one can sit in the back seats while the harness is in use aid, because the anchor of the harness is below the neck level of the front-seat passengers, the harness is prone to cause spinal compression in the event of a crash.

But tlie Hooker Quickie is certainly better than nothing aid is highly recommended by some authorities who believe some back injury is a better alternative than death in many types of crashes.

For more information on the Hooker Quickie contact Jack Hooker at 30 East Jefferson St., Freeport, IL 61302 (815) 233-5478.

No matter what type of harness your plane has it is important to realize that they do not last forever. Generally speaking, a belt (shoulder or seat) which is more than 15 years old should be replaced. Sun, heat, moisture and ozone take their toll on material over the years and drastically reduce the strength.

Belts which have been cut, frayed or which have been soaked with some type of liquid probably have outlived their usefulness.

Also, to be useful, a seat and shoulder belt combination must fit properly. The lap belt should fit snugly against the lap and put pressure on the pelvis. It should not be loose and should not run across the stomach or vital organs.

The shoulder harness should run diagonally across tlie chest connecting on the side of the hip. It is important that the harness not be in a position to apply pressure to the neck and that it actually hold the upper torso and not permit the passenger to slide out from beneath it in a crash.

At one time, there were no retrofit shoulder harnesses available for Pipers and none could be had, despite the fact that just about everyone was aware of their value in saving lives. Later, retrofit kits became available, bur only at more than a thousand dollars a seat - too dear for many aircraft owners.

Today, there are several choices and although some may complain about the cost, almost everyone would agree that the lives of themselves, family and friends is much more than the several hundred dollars a seat the protection costs today.

A Paint Job & A Quandary

Even when dealing with a good paint shop an owner may find himself in a quandary as was shown by the problem of one CPA member who is now involved in a dispute between the shop and her mechanic.

She really likes the paint job and the shop seems to have done a good quality job. Her mechanic liked the paint too - except for the fact there was no logbook indication that the control surfaces were balanced.

Unfortunately, this member really likes the work of her mechanic, too, and she is depending on him to do the annual inspection and sign the plane off He insists that he cannot do so until the control surfaces are balanced.

The paint shop refuses saying it has painted scores of Cherokees and has never balanced control surface one. The shop says it realizes that on some planes balancing is required - Bonanzas, for example. But they insist that flutter is not a problem on Cherokees - period.

This quaidary might not happen often, but it sure is an inconvenience when it does occur. It is one more thing to consider when deciding on a paint job for your plane.

NADA Aircraft Price Guide

The National Automobile Dealers Association. producers of price guides for automobiles, motorcycles and recreational vehicles, have added a new guide to their list - aircraft.

The Aircraft Appraisal Guide is available to the public at $85 a year for three issues - a steep price, but far less expensive than tlie $245 a year for the Aircraft Blue Book-Price Digest, the book whicli has been the benchmark for aircraft price information for years.

The NADA guide shows prices for three raiges: low, average and high. Low range is for planes with high-time engines aid limited avionics capability. High covers planes with low-time engines and lots of avionics, and, of

course, average covers the normal situation somewhere in between.

The Aircraft Bluebook and the NADA guide are two different books serving two different market segments - the Bluebook is more detailed and includes infonnation about AD's and aircraft serial numbers. It is meant to be used by lending institutions and aircraft dealers and brokers.

The NADA guide is more likely to appeal to individuals looking to buy or sell their own aircraft.

As one might suspect, there are differences in pricing between the publications with the NADA guide, in general, showing a higher price for a specific model than tlie Bluebook. In some cases, the difference can be great. For example, the pri e given for a 1974 Cherokee 235 is shown as $37,000 in the Bluebook and as $42,700 (average) in the NADA guide.

Nonetheless, for most purposes the new guide should be helpful for individual owners seeking to buy or sell aircraft. For more information contact NADA at 1-800-966-6212.

Some Ideas On Slow Cherokee

by Marvin Merryman

I read of a member's problem with a slow Cherokee. I often fly a Cherokee Challenger and help with its maintenance. We have made this a very fast Cherokee compared to other 180s. We did no tests or computations, but placed alongside of other Cherokee 180s at full throttle, my plane moves steadily away from them

First. I recommend that he do all of the things you recommended, absolutely.

Second, get one of the aircraft's latest weight-and-balance forms arid check the empty weight of the airplane against the empty weight of the original factory figures. If it is significantly heavier this could lower speed to some degree.

Third, check the propeller, remove nicks a i d rough areas on the leading edge, Have it done carefully by someone who has the knowledge and proper skills. Then, polish the forward surface (front) of the prop. On the back side remove all rough areas, scratches, and low areas in the paint leaving a very smooth thin coat of black. No doubt you will sand tlirough the paint in many areas.

The back of the propeller must be smooth, no hills, valleys, scratches or holes in the paint. After smoothing the back surface repaint it with flat black paint. Apply a very thin coat, just enough to make it solid black. And make sure it is smooth, very smooth.

This will make the propeller much more efficient. Note: if you have the prop reworked, polish both sides of the prop smooth. The front should be shiny smooth. The overhauled finish is still too rough.

Fourth, rough paint on the aircraft fuselage and surfaces of the wings or tail makes for a lot of drag. Your new paint job should cure that.

Fifth, if you already have all the speed and handling mods, o-k. If not, consider adding (a) stabilator gap seals (b) flap hinge fairings (c) flap-to-fuselage fairings (d) wheel pants fairings to cover the strut and brake calipers and (e) wing-to-fuselage root fairings.

The wing root fairings seem to cut down on noise and drafts.

Sixth, after you have had your rigging carefully checked and adjusted, make a careful check to insure that when the rudder is centered the nose wheel is absolutely centered. The adjustment for this is under the cowling where there are actuating rods for nose wheel steering attached to a lever (horn) on the top of the nose strut.

Also, check to see that the steering rod bearings are tight (in tlie bearing area) and free to move in the intended directions, but not sloppy loose.

Also, carefully check the bolt that attaches the horn to the strut. This a m puts a lot of stress on the attachments and sometimes is loose, but not obviously so.

Seventh, check the alignment of all wheel pants to insure that they are attached correctly, solidly and in proper alignment.

Eighth, make sure that the magneto internal timing is correct as well as the timing of the magneto to the engine.

I hope these suggestions will be of some help as well as those suggestions you made to Mr. Dean.

On the Challenger I fly we have done all of these things. Each has added something to tlie speed or handling of the plane.

I made these suggestions to another 180 owner and he ended up with quite a different airplane. He also added a Black Mac prop a i d was pleased with that, too.

Concerned About Rigging & Balance

I read the recent article about the Melton family plane which had a trim tab on the aileron which was removed and the plane was re-rigged.

My plane also has a tab on my aileron which was on the plane when I bought it. J would like to know what re-rig means in plain talk and what kind of money we are talking about.

Also, 7320W has somewhat of a vibration at low rpms but it is not very noticeable when rpms are increased. The prop was balanced on the plane and the mechanic said there was some vibration coming from the rear of the engine. Any suggestioiis on where I should look for the problem?

Jim Ragazzo
Trenton, NJ 08610

Dear Jim,

Re-rigging consists of checking tension of control cables and making sure they are up to specifications and then checking the rigging of the ailerons, flaps, and rudder, also according to maintenance manual.

You are looking at about ten hours of shop labor for

the process according to George Durham Jr., of No Toro Aircraft and also the Piper estimating manual. Cost, of course, will depend also on the hourly rate at your shop.

Also, the cost will increase if problems are found, such as frozen pulleys or frayed cables.

As to the vibration, I can not offer any suggestions, Some vibration is, of course normal - it is the nature of a reciprocating engine to vibrate alittle bit. From behind my desk it is not possible to guess about whether your vibration is normal or excessive. Also, I know ofnothing on the back of the engine which will contribute to noticeable vibration.

Wants Help With Rusty Screws

Robert C. Phillips Jr., of Pineville, North Carolina, asked for suggestions on removing rusty screws. His answer:

Rusty screws are a major headache when working on aircraft - that is the reason for the popularity of stainless steel screw kits. But as you have found out, getting out the screws in the first place can be a major headache.

Here are a few tips which might help.

√ Use a good tool - you want a screwdriver tip which is the largest which will properly fill the slot of the screw. Make sure that the tip is in good condition - if it is damaged, get another screwdriver. And use screwdrivers with large handles or with ball-grip ratcheting drivers.

√ Seat the driver by giving it a tap with a hammer in the slot - this both seats the driver and, hopefully, will tend to break the screw loose a hit.

√ Use a seating compound to get a better grip on the screw such as "Screw Grab" (Grand Industrial, Inc., 4625 Clyde Park, SW, Wyoming, MI 49509 616-538-0339.

√ Use penetrating oil to try to "unstick" the screw.

√ Finally, if all else fails, you need to use a screw extractor (EZ-Out). They require drilling a hole in the screw and using a device like a reverse drill to remove the screw. Kits are usually available locally, or contact Reid Tool Supply, 2265 Black Creek Road, Muskegon, MI 49444 (800-253-0421.)

Once you get the screws out and replaced with stainless, hopefully this problem will be a thing of the past for you.

Higher Climb Speed Than Specified

by Bmce Vinnola

I have something to share that just might save some lives.

I am the proud owner of a beautiful Cherokee 180. I learned to fly in her and have about 250 hours logged.

When I first got her all of the local pilots were very helpful and full ofadvice, but the best advice was when one pilot told me of his story when he took on fuel at a high-altitude airport with his fully-loaded Cherokee.

He told me that he could not gain any altitude after take off until be increased his climb speed well above the flight manual's best rate-of-climb speed. He felt that you have to go fast enough to "get rid of that drag bucket" or it will never climb.

Well, my brain put this advice away along with all of the other countless helpful hints I was receiving at the time. Until last spring....

It was a chilly morning when the Cherokee brought myself, my friend, and his two teenage boys to the Laramie, Wyoming fly-in - tield elevation 7,280 feet, The local FBO was selling 100 LL for $1.75 a gallon (a great deal in this area), so I topped the tanks.

As the day wore on the sky cleared and the temperature climbed to well over 70 degrees. When it came time for departure I checked the weight-and-balance; in the envelope and below gross. 1 had flown the airplane with more weight and at higher density altitudes, so I was confident that all was well for the return trip back home. But those flights were from a 5,000 foot field elevation.

Take off seemed uneventful, the engine ran perfectly and the plane became airborne after using less than half of the runway. On the climb-out I nailed 85 mph indicated airspeed, the flight manual's best rate of climb. To my horror, the airplane refused to climb. The stall warning light was flashing with every bump that we met in the air and I had a very sick feeling that 1 may have endangered my passengers

I turned downwind at 500 feet AGL and was going to declare an emergency to get a speedy landing when I remembered my friend's advice. I nosed the plane over just enough to gain air speed and as soon as the plane showed 110 mph indicated, she gave me a 400 feet-per-minuteclimb, all the way to 10,500 feet.

The one basic aerodynamic factor that the flight manual neglected to mention is that at agiven air speed and wine loading, the angle of attack will increase with altitude. When the angle of attack becomes excessive the wing becomes inefficient and we are forced to operate from the "backside of the power curve."

When wing loading and altitude are much greater than usual, the best-rate-of-climb is at a significantly higher speed than what is quoted in your flight manual. This factor may affect all of your V-speeds.

Piper Cure For Nosewheel Shimmy

by Lou Brinkman

Several years ago I developed nosewheel shimmy on my 1978 Archer. 1 replaced the shimmy dampener with the latest model made of machined aluminum and which was field re-buildable. But the change did nothing for the problem.

Ill desperation, I called the factory. I told them I was embarrassed to carry passengers because of the shinmying on landing roll out. They apparently knew exactly what the cause of the problem was because they immediately recommended installation of Piper Kit # 764 992V.

There was no suggestion of loose rudder cables, worn scissor bushings, out of balance nose wheel or worn shimmy dampener. The kit consists of two SOLID push rods to replace the spring loaded "bungee" type rods and two bushings to reduce the stop limits of the stop bolts.

Installation was simple and it cured the problem. Ground handling is much more solid and responsive with the elimination of the spring loaded rods.

At first Piper wanted almost $400 for the kit. But I raised so much hell about it that a couple of days later I received a call telling me that if I acted immediately by placing an order through my dealer I could buy a kit for $196.

Frankly, I see no reason why the "bungee" type rods could not be welded solid and washers or bushings installed on stop bolts.

Source of Placards

by Robert C. Phillips Jr.

In an atteinpt to refurbish my 1966 Cherokee 1 found a source for placards. It is Aircraft Placards, 6 Elm Road, North Hampton, NH 03862 (603) 964-8905.

This company does a great job for letters, words, etc., etched on metal. They can customize the work to suit your own needs.

Hartzell Announced AD-Free Prop Hub

Hartzell Propeller has introduced an extensive hub replacement program, offering newly designed hubs for certain aircraft with two and three blade "Y" shank propellers.

The two-blade replacement features a refined contour in the filletradius, improved shot peening and improved corrosion protection.

The new hubs are available through Harzell's distributor network at half of the list price aid can be installed by the Hartzell Service Center in Piqua, Ohio, or any Hartzell distributor or propeller repair station. The new pricing structure will remain in effect throughout 1993, according to the company.

For a list of Hartzell distributors, prices, service bulletins, or hub replacement program information call Hartzell at (513) 778-4387. For parts or service, contact the Service Center at (513) 778-4201 or via FAX at (513) 778-4202.

Firewall Forward Vibration

by Terry Lee Rogers

Vibration from the engine compartment can be a real problem for aircraft owners. That is a lot ofstuffpacked under the cowl aid it is often hard to determine whether vibration is coming from the engine or from one of the many accessories under that cowl. Is it for real, or is it Memorex?

Although the following checklist will not solve all your firewall forward vibration problems, it does give a fairly good idea of what can cause vibration and how to go about finding the cause.

Assuming that some annoying vibration is causing you distress, here are the places to check:

1 - Check those baffles. Look inside the cowling to find areas of chaffing in the baffle contact areas. Trim excess material where required. But remember - those baffles serve apurpose. They are designed to force airflow to go in certain directions so that all cylinders receive cooling air. Do NOT create leaks in the baffles.

2 - Exhaust system - the exhaust is a mighty big producer of vibratioii It is inherent in the design. Make sure that the exhaust is tight and that the piping is not rubbing on any cowling areas. Particularly, make sure the pipe is not chafing where it extends through the cowling.

3 - Induction hose clamps - those intake hoses are secured by clamps. Make sure the clamps are not interfering with aircraft structures. Look for marks on the engine mount. Rotate the clamps to move screws and other hardware, as required.

4 - The breather - that device which was designed to dump excess oil overboard on your aircraft belly. Make sure that the breather is not interfering with the cowling.

5 - Engine mounts - make sure engine mounts are in good condition and that the Lord Mounts are properly secured by the through bolts. Replace the *mounts if the rub*ber has separated from the metal or the mount is obviously worn. Worn Lord mounts, although expensive to replace, are often the key to eliminating excessive engine vibration. Worn mounts often permit the engine to sag.

6 - Propeller track - that propeller has two blades and they are supposed to run in approximately the same track. If they are not in alignment you get the same effect as when a ceiling fan has an out of alignment blade. Check blade alignment by placing a properly anchored reference point at the tip of one blade and rotating the blade to see where it falls. The blades should not be more than 1/16 inch out of track.

If the propeller has been dressed out recently and much metal was removed, the blades may be in need of rebalancing. Make sure you check the blades for any signs of damage and for any loose or missing hardware.

7 - The spinner - this is the cone shaped device which fits in front of the propeller and if yours has been damaged recently, you might swear it was made of either platinum or gold. It is costly, and hard to find.

Check it for any visible wobble while the engine is idling. Remove the spinner and check the hardware and, especially, check the bulkhead underneath for any signs of cracking or damage. A damaged bulkhead needs to be replaced. you do not want to fly behind one which is in the disintegrating mode.

8 - Engine controls - those cables should be flexible, with gentle curves and never stretched taut. If the cable needs repositioning, pull it through the firewall and re-clamp

it as necessary. Make sure that all control cables are free of contact with the engine or the accessory case.

9 - Starter Cable -make sure that this cable is free and that there is some slack to permit flexing.

10 - Engine condition - a poor running engine is bound to have vibration. Check out the spark plugs for type, gap, and fouling. Make sure the ignition harness is in good shape and check the mag timing. Obviously, good compression is required.

The fuel injectors or carburetor need to be working properly. Both the induction and exhaust systems need to be checked to make sure they are working properly,

And then there is the concept of overall engine balancing. Dynamic balancing is becoming more popular. It is performed with a machine known as a Chadwick-Helmuth balancer (see the letter immediately below, too.) It is something which can be performed by many A&P mechanics and by all propeller shops.

11 - Antennas - Gosh, what do these have to do with engine vibration? Well, if the vibration seems depend nt upon airspeed, sometimes the culprit turns out to be antennas, including that long-wire sometunes used for the ADF. Vibration at the antennas can SEEM to be coming from the engine compartment.

12 - Wheel balance - These items, too, can create a vibration which, during takeoff and landing, seems to be coming from the engine compartment.

13 - Any other source of vibration - including the possibility that there is some real catastrophic failure going on under that cowl. Sometimes vibration is just something annoying, and other times it is a signal that something expensive - and dangerous - is in the process of breaking. Never just dismiss an unusual vibration as something minor unless you have checked it out thoroughly.

Report On Knots-2-U Kit

by C. Wayne Perry

1 fly a 1968 180D, N6973J. This is the second 180 I've owned (the first was a '66). and I've always loved it. It carries a load, it's dependable and easy to fly.

But 73J has always been about six knots slow for some reason; until I put the mods on I had never been able to get her to true faster than 177 knots. I wanted to do better than that.

My first step was to have the propeller re-pitched, San Antonio Propeller re-pitched my prop from the mess it was (it varied anywhere from 59 to 61 inches) to a smooth 62 inches.

I certainly lost takeoff arid climb performance with that move, but the engine did run more smoothly and the airspeed indicated about three mph faster than before.

I called around to various speed mod shops and found Jim Bradshaw at Knots-2-U very helpful. He even sent some preliminary information to my mechanic before I placed an order. That's service.

Obviously, he wanted my business, so I ordered the wing and stabilator gap seals. They arrived quickly and my mechanic put them on in the 40 hours the book said the job would take. That's not bad, since he had never installed gap seals before.

Now for the performance. There's good news and bad news. First the bad news. 1 can't really tell the airplane is faster, even though I've tried timing trips of about 100 NM at various altitudes.

I can say the airspeed indicates about seven mph faster than it did after the prop was re-pitched (a total 10 mph indicated gain), so I have to assume 73J is, indeed, going somewhat faster.

In that sense 1 am disappointed. Although the previous Knots-2-U customers I called (Jim sent me a list) warned me I wouldn't notice much speed difference, 1 had hoped.

Where I really noticed the difference is in takeoff and climb. I gained back all that I lost from having the prop re-pitched, and then some. Some people in a Musketeer took off with me about 30 seconds in trail. I leveled at 2,500 feet while he was still struggling to reach 2,000.

My whole family flew to the beach one Saturday. 73J was loaded to within 150 pounds of gross, the air temp was about 85 degrees (and humid), and even so I held more than 1,000 feet per minute climb all the way up to my cruising altitude of 6,000 feet. 73J was still climbing strong even then.

Now that San Antonio is cold, when I'm flying solo I expect to see the VSI peg at 1,500 feet per minute once I'm out of ground effect.

Knowing what I know now, would I install Knots-2-U again? You bet I would. At least I've gained ten mph indicated, and that has to mean at least some airspeed gain.

But even if it didn't, being able to zoom to altitude cuts minutes off any trip just by shortening the time to climb. And Jim Bradshaw and company were a delight to do business with.

I hope this is helpful in answering from folks like me who are hoping to squeeze just a little more performance out of a solid perfomier like a Cherokee 180.

Vibration in His Challenger

Harry Lee Waldie Jr., of Cheboygan, Michigan asked about possible causes of engine vibration in his 1973 Challenger. The answer:

Unfortunately, it is just about impossible to diagnose a vibration long distance. It does sound as if your engine could benefit from a dynamic balancing job. This is done utilizing a machine especially manufactured for the job and it has become quite a popular operation in the last few years. Generally it costs from $125 to about $200 to have your engine and propeller balanced.

For more information and to locate the facility nearest to you contact the manufacturer of the equipment,

Chadwick-Helmuth Co., 4601 N. Arden Dr., El Monte, CA 91731 (818) 575-6161.

Piper did have a service letter out prohibiting extended operation between 2,150 and 2,350 rpm for earlier model 180s, but this service letter (#526) should NOT affect your aircraft.

Pitot Wiring Route; Pipers that Roll

A couple of topics which have gotten alot of comment in the past brought forth some comment from one of CPA's advertisers, Al Snyder, of Skycraft Corp.:

Regarding the routing of the electric lines for the heated pitot tube - the routing does not follow the pneumatic lines of the pitot tube. They go directly to the wire harness that goes through the wing to the tip. Because of the amount of current draw - 20 amps - the wire should probably be a size #12, according to Al.

The routing has been a problem even for Piper. When Piper offered a retrofit kit, the kit used an alternate method and placed the wiring along the trailing edge of the wing. They removed a rivet every now and then and added a screw and clamp to hold the wire. The reason is that removal of the fuel tank is a "fantastic job" and even when it is removed it is hard to get all the way back into the wing.

On another topic, Al commented on the instability of some Cherokees. In the Marchissue we covered some of the problems concerning aircraft rigging. But one we did not cover.

The Cherokee wing is supposed to have a two-degree washout along the wing. The only way to determine whether a wing has it or not is to use a protractor and check.

Normally, this is not a problem. The wings were properly made at the factory, and this is not something a wing normally loses.

However, a wing which has been rebuilt may not have the proper washout. Also, according to Al, the first 500 or so Cherokees built did NOT have this washout in the wing. A lot of those wings ended up in salvage and may have been used in rebuilding a wing on a later model.

The problem, of course, is that a wing with a washout will develop a little bit different lift than one without and if the wings on an airplane are different, you can expect a tendency to roll.

Alternator Bracket Fix Needs to be Fixed

by Lou Brinkman

After repeated failures of alternator mounting brackets and rear halves of alternator cases on two different aircraft, I had kit # 764-347V installed on N47924 in June, 1984.

I learned of this kit by a chance conversation with Bob Meehan, former service manager of General Aviation, Inc., of Fullerton Airport. I have never seen the kit mentioned in any service letters or bulletins.

On first examination it would appear to solve the problem. It utilizes a second bracket mounted on an aft mounting pad to absorb the vibration and strengthen the area of the rear alternator mounting lug.

The Chrysler alternator used by Piper is basically an automotive design that has been used for more than 30 years and bas been extremely reliable and trouble-free when it comes to keeping the battery charged.

The reason the kit does not cure the problem is quite evident from the worn and broken parts that are enclosed. The design of the rear mounting lug, which uses a rolled steel bushing, cannot accomtnodate the amount of vibration encountered when mounted on any aircraft engine, whether it be four or six cylinders.

The fit between the steel bushing and through-bolt is not tight around the circumference of the bolt. The loose fit, and gap in the bearing surface of the bushing, allows horizontal movement from vibration which results in wear (and noise).

As the wear and clearance increase, vibration is magnified until both brackets can no longer absorb the stress and then both break.

The steel bushing is about 1/8 inch longer than the thickness of the mounting lug. When the through bolt is tightened, friction is applied on the ends of the bushing rather than between the mounting lug and mounting brackets. This results in the rear mounting lug "floating" around the bolt with the resulting wear from vibration. This condition does not occur on the front mounting lug.

Proposed remedies are to grind the bushing down to the thickness of the lug, make up the difference with washers, and retighten. This does not eliminate excessive clearance between the bushing and bolt, but it does eliminate horizontal movement.

A better fix is to remove the rolled steel bushing, machine a bushing with close tolerance around the bolt circumference and with less thickness than the mounting lug, press it into the lug, add washers and then use a separate, shorter bolt on each mounting lug.

The design of strut 78483-0 is very poor. The hole for the through bolt is much larger than the diameter of the bolt, resulting in reduced edge clearance around the hole. They crack or break regularly. The hole should be the same diameter as the bolt and at least half again as thick, with increased edge clearance.

Repair Those 8-Day Clocks

I am happy to say that our Keystone Instnunent Division in Lock Haven still overhauls and recertifies the Wakman clocks. Parts have gottenmore expensive (still must come from Europe), but the Wakman is hard to beat for accurate, easy timing.

New Wakman clocks are available, but prices have gone out of sight. So I would suggest anyone who owns a Wakman should keep it in good operating order. Good used

units are now selling for as much as $500, depending on model.

Any iuterested Wakman owners should contact the Lock Haven office at (800) 443-3117. Ask for George.

Sincerely yours,
Sam Price Jr.
Airparts of Lock Haven
Lock Haven, PA 17745

Problem With Electric Trim

One member called regarding a problem with the electric trim on his Archer II. During cold weather the trim operated much too slowly. In fact, during operation one of the cables broke.

The question was whether any other type of lubricant was recommended by the factory and whether there were any suggestions for curing the problem.

According to the technical support staff at Piper, the lubricant specified in the maintenance manual should handle various climatic conditions. For anyone experiencing this problem, be sure to check the tail cone for water accumulation. Another cause could be that the electric trim servo may not be at full strength.

Also, cable tension is very important. According to the Piper maintenance manual, the trim cable tension should be 14 pounds, +-1 pound. The stabilator cable tension should be 50 pounds, +- 5 pounds.

(Note the Warrior manual specifies nearly identical readings, except that for that model the stabilator tension is 40 pounds, +-5 pounds. Trim cable tension IS identical.)

Fixed His Interior Plastic Trim

by Jim Richmond

I found the recent article on plastic restoration of interest. I could have used the ideas before starting my own interior restoration project.

Our group owns two Cherokee 235s, one of which was in need of having the interior redone.

My project began when I tried to order some plastic interior trim parts from our local Piper dealer. Not only were the prices outrageous, but the majority of the items were out of stock with no due date.

To top things off, the dealer was on credit hold with Piper. After considerable searching I found Avmat 20 in Memphis (800-238-6816 - unfortunately no credit cards - ask for Jerry). If the parts are available he will sell them to you at a discount. Another good source is Air Parts of Lock Haven (800-772-3117.) They give a ten percent discount to CPA members.

The seat backs and a flap handle/trim wheel cover were ordered from Airflite Industries (800-345-7753). Good quality, but required drilling, pop riveting, some trimming and painting. The plastic chrome trim strip around the seat back can be bought by the roll at Pep Boys Auto Parts. Make sure the flap handle cover is trimmed so the flap handle rests on the floor, not on the cover, and that the trim wheel does not touch. Lightly sand the parts with #400 sandpaper before painting. I used Piper #744 spray paint (Randolph) and the color match was good.

The windshield trim that was out of stock at Piper was ordered from Kinzie Industries (405-327-1565). The parts are different in design from Piper with a different surface finish. Drilling, trimming and painting is required with not much price advantage.

To trim the parts, heat an old knife with a propane torch. Final fit can be done with a Dremel tool or a belt sander held in a vise. Stick with the factory parts unless you are replacing everything. The factory parts are usually predrilled and do not require trimming.

If you can purchase new plastic parts, do it. Time, heat and sun cause the plasticizers (the compounds that make the plastic bendable) to leach out. causing the ABS plastic to become brittle. If you buy from a salvage yard, try to buy the newest parts available.

While the overhead is down, replace your speaker if you haven't recently done so. If the plastic is cracking, the speaker will not be far behind. Lightly sand the parts and wipe down with thinner or denatured alcohol before painting. I used Krylon antique white on the overhead and window trim and it looks great.

While the overhead and window trim was off, I paid a local upholstery shop $75 to spray the headliner with SM vinyl dye. It looks like new.

Wentworth Aircraft (612-722-0065) supplied used dash and miscellaneous plastic trim. The parts were fair to good quality and about half the price of new.

To repair cracked plastic parts, consider the following method: obtain black ABS pipe cement (hardware store) and ,060 or .040 ABS plastic (local plastic supply or plastic vacuum fomier). Cut and glue strips of the ABS on the backside of the cracks. Fill in the missing areas and cracks with Bondo. Scrape or sand excess before it dries. Paint will not fill in cracks - use Bondo.

The vinyl covered round door seal was ordered from Airtex (215-295-4115). Good quality and a fair price. The quarter round neoprene door seal was ordered from Brown Aircraft Supply (904-396-6655.) Plan on using Bondo or strips of rubber to build up the low area in the upper left hand comer and across the top of the door if you want a decent seal.

Seal-Rite #403 automotive weather-strip (Pep Boys) was glued to the airframe door opening. It makes a double seal with the quarter round and helps keep out the rain. Even with double seals we do not have a perfect seal.

The dash was deteriorated beyond repair. When the leaking windshields were removed to be resealed, we recovered the dash. The old material was scraped off with a putty knife. Automotive vinyl top material (auto trim shop) was glued down with 3M #77 spray adhesive. However, do not use that adhesive. After a few months in the sun, the fabric pulled up where it was cut to fit the contours. Find an

adhesive that is not affected by heat.

Silicone Seal was used on the windshield rather than the standard putty. The putty, over time, no longer stuck, thus letting rain in. Make sure excess dash material is trimmed off so you seal against the aluminum, not the dash material (factory error.) It may be a chore to remove the silicone in the future, but for now, no more leaks.

The overhead plastic sun visors were available from Piper at $85 each and $45 each at salvage yards. I took our broken ones to a local plexiglass fabricator. He cut and drilled new ones for $25 each. The clamp down portion of your old visors will have to be cut out by the fabricator and used with the new ones.

The rear fiberglass bulkhead and hat rack were scratched and discolored. It cleaned up goodenough with a Scotchbrite pad that 1 did not have to paint it.

Mechanical Clock Repair Source

by Ira B. Lewis

Someone recently wanted to know where to send a Wakman mechanical clock for repairs. I recently had mine repaired at:

Kew Garden Jewelers
5422 W. Atlantic Bvd.
Margate, FL 31063
(305) 973-1170

The clock is running perfectly now. The charge was one how of labor at $55.

Comments on Skylight

by R. Elks

We recently completed a major refit on the Piper Archer II which I fly. It looks brand new having received a beautiful paint job, a new interior and a rebuilt engine.

While the plane was grounded we decided to fit the new Cherokee Skylite kit by Skycraft Corp. I would like to share our experiences for the benefit of our membership.

First, Skycraft respondedto our request for prompt delivery as the A/C was ready to be painted and we did not wait to hold that up. The presentation of the kit was fantastic. All items were clearly identified by name and part number. Even a routing bit was included.

The kit included ALL the necessary legal documents which such a modification requires.

However, as an instrument engineer and technical writer I feel qualified to say that the drawings and instructions supplied with the kit were not up to the quality of Skycraft's excellent product.

In their defense, we were offered ongoing assistance on the telephone by the owner himself.

My recommendations to the members considering this kit are: Find areasonably priced A&P and expect to pay a minimum of the kit purchase price again to fit it. Based on that, try to negotiate an inclusive price for fitting after Letting him see the full kit.

Make it clear to the A&P you choose that Skycraft is only too pleased to assist if help is needed.

In conclusion, if someone is looking to increase his visibility and landing safety - buy it...it really is good quality.

Comments on Annuals And Maintenance

by Harry F. Wells

As you and I know, the so-called annual listed at many FBOs, Trade-a-Plane, and other publications is a flat rate for the bare inspection. This generally does NOT include any work. This is what brings about an uproar as to the high cost of flying. As you so aptly pointed out, repairs, AD's, etc, really get to the bottom line.

My age, and the fact that 1 ani semiretired but still want to work on aircraft, gives me the opportunity to pick and choose. If you want to pin me down on when I will have it done, go someplace else. Even if I work diligently, as sure as God made green apples, there will be a part needed that will be back ordered or an AD missed or done incorrectly.

When asked for a completion date I give one that is competitive with anyone else, but tell them it cannot be guaranteed. Generally, those that cannot or will not listen go elsewhere where they have been "promised the date they wanted only to have it delayed by the normal things that were told to them.

With few exceptions, as you pointed out, log books are seldom written in English nor are the AD's. Too many mechanics must be frustrated doctors as their handwriting is so identical.

Many owners tell me that all AD's are up to date and that there is a listing of them in the back of the logbook. These lists do itemize the AD's, including the date done, but where there should be a signature and license number at the end of the line there is nothing. This makes it nothing more than a grocery store list. The A&P-IA must then wade through all the logs and make a list that is a true compliance fonn.

Another stumbling block is that too many mechanics will put the note "AD's through Dec. 1992 checked and complied with" which is okay if no AD's were done or required to be done. But each AD that must be checked each 100 hours or annual must be itemized with the signature and license number and date on the logbook entry.

There is one AD on a magneto that states the make, model and serial number must be entered into the log along with the signature and license number of the person doing the work. The last annual done on one particular aircraft showed the AD number - period! The next person to do the annual will have to do the AD all over. This showed up on a pre-purchase inspection I did myself.

This same aircraft had an engine whose serial number was not the one on the engine log and there was no entry showing that another engine was ever installed in the plane.

One suggestion would be to have tlie make, model, serial number, and any other necessary information on tlie front sheets of an engine log of the accessories, such as mags, carb, generator, alternator and starter.

The most *important maintenance consideration* is the selection of who does the work. A reliable person with integrity is essential - a person who will explain things and work for mutual benefit. When an annual comes to me, I tell the owner I do not have a flat rate, but do it on an hourly basis.

You and I agree that the owner can help and can perform the preventive maintenance permitted by the rules. One thing that should be clear is that owner-maintenance must be entered into the proper log and signed by the person with the pilot license number and the date of doing the work.

Occasionally I find owners that cannot pound a nail straight and I need to find some way to dissuade them. Many times my "help" finds that working on their own plane is too much for them and even though they do things right, they never want to help again.

Also, many pilots have been exposed to hardware store materials such as "pop" rivets, ordinary bolts and nuts and other items that are cheap compared to aircraft materials. I tell them that a manufactured airplane must use approved materials only. I have bad to remove non-approved items and let the owner put them hack in after he removed the plane from my jurisdiction.

Carburetor Air Box Problem Found

by Lewis Young

I recently encowitered a problem with my 1979 Archer II that was the subject of an FAA Airworthiness Alert in 1984. Because of the potentially serious consequences of failing to correct this problem it may be worthwhile to bring it again to members' attention.

The carburetor air box contains a flapper valve which is controlled by the carburetor heat lever in the cockpit. The valve is metal and contains a seal along the edge. This seal is of a material that becomes brittle with age and is subject to cracking aid separation from the metal plate.

When apart of this seal is missing two things happen: first, when carburetor heat is off, unfiltered air is allowed into the engine aid, second, when carburetor heat is on, cool air mixes with the warm air from the engine reducing the amount of heat available to deal with carburetor icing.

An accident reported in the March 1993 issue of Plane & Pilot was attributed to faulty maintenance of the carburetor air box and a missing seal.

Pilots should, 1 believe, be aware of this problem and periodically inspect the flapper valve to see that the seal is functioning properly. Early indications of this problem are excessive dirt in the oil analysis and a less than normal drop in engine rpm when carburetor heat is applied during run up.

Fuel Pump Not Durable

by Ward G. Graham

I had to replace two fuel pumps on my Piper Arrow over a short time period, each at a high cost.

The second time, as I was complaining to the shop foreman, he asked me how I used the pump. I read back to him about the same information that Gene wrote in his second paragraph, i.e., the manufacturer's recommendation.

My mechanic friend said, "Then that's the problem. The little pump is not built to stand either that much use or that length of operating time. Use it to prime for start and for only a very short time in the initial climb out. Leave it off the rest of the time unless the engine-driven pump fails."

Maybe when those aircraft operating procedures were written the fuel pump replacement was only $50 and replacement wasn't a major item. Or maybe the manufacturer wanted to sell lots of pumps.

Needless to say I have cut way back on operating time on the pump and have gone several years aid many hundreds of hours without a replacement.

Muffler Inspection

Jerry L. Wilson, of North Platte, Nebraska, said his plane required inspection every 50 hours because of "old-style" mufflers. He wanted to know whether other mufflers would eliminate the inspections. His answer:

In 1970 Piper became concerned about the condition of certain mufflers and the company issued service letter No. 561 calling for inspection of mufflers every 50 hours. The inspection required the removal of tlie cabin air heat shroud to inspect for damage including burn through or cracks.

The service letter stated that the inspections would he discontinued upon installation of a "new-type" muffler, specifically part number 99482-00V for the 140 through 160 models, and P/N 99482-02V for the 180 series.

Obviously, planes manufactured after 1970 would not be affected as they would be manufactured with the new-style mufflers.

Problems With Brake System

Charles Emick, of Mt. Eaton, Ohio, complained of persistent problems with spongy brakes. His answer:

The problem with your brakes may *not* be air *in* the system at all. The spongy feeling you feel may be due to internal leaks. The problem is quite prevalent with Pipers.

The problem stems from the fact that Piper uses the same plumbing system for both the hand brake and toe brakes. To accomplish this feat, Piper uses a type of one-way seal known as a "Dyna Seal." One such seal is used at

each of the brake reservoirs.

If any of the seals go bad the system tends to leak fluid internally and you end up with a soft pedal. Unfortunately, the only cure is rebuilding the cylinder with the bad Dyna Seal.

Otherwise. the Piper brake system is relatively straightforward. Although it is possible to leak air, generally such a leak also would result in the leakage of fluid which would be apparent upon inspection.

Selecting an Avionics Shop

by Terry Lee Rogers

Selecting an avionics shop is like selecting your family doctor - the decision will require you to use a layman's judgment to evaluate the technical ability of an expert.

Generally, the need to decide on a radio shop will come up in one of two contexts: your radio(s) just went out and you need to get repairs now or you want to add new equipment and need to decide on which shop to make the installation.

How should you proceed to evaluate radio shops? Well, the first thing might be to get recommendations from friends or people whose opinions you trust. Perhaps your mechanic might make some recommendations. Hopefully, if you get three or four recommendations some of them will tend to be of the same shop. That is certainly a good beginning.

Installation or Repair

The shop you select will depend, to some extent, on what is in your panel or what you plan on putting there. Obviously, if your panel is currently filled with nearly new King radios, you will almost certainly select a shop which specializes in working on King radios.

Unfortunately, for most of us, the situation is not so clear. Generally the avionics on a typical general aviation plane consist of a mishmash of various brands and types of radios. You might have one Narco and one King navcom. Or the navcoms may be the same brand, but the ADF may be another.

And if you are planning on upgrading or adding equipment, the brand involved may deterniine which shop you select. Even though a shop may be able to install a radio for which it is not a factory authorized service shop, think of the problems you may encounter when you have to select another shop a few months down the road if warranty work is required on that radio.

So, with this much said, what are the things an owner should consider when deciding on what radio shop is best for him?

√ The shop you are looking for will have been in business for many years and employ experienced personnel. A brand new shop may do good work, but then again it has no track record for you to be sure. Also, whether or not a new shop is in business a year or two down the road will depend not only on how good a job it does, but on how much business sense the owner has. You are better off with a shop which has demonstrated good business sense over the years than an unproven quantity.

√ A good shop should have someone who can make you feel welcome and can answer your questions. Someone should greet you when you enter the shop - you should not have to find someone attached to the pair of feet protruding from under an instrument panel to talk to.

The "greeter" should be knowledgeable and be able to give you good answers to your questions. When you describe the symptoms he should be able to give you a reasonable estimate of what needs to be done and what it might cost.

If you are getting an installation, he should be able to show you some typical installations - most shops keep photographs of work performed for happy customers.

And finally, he should be able to provide you with references to some of those happy customers.

√ A good shop is clean and neat. A shop with radios scattered all over the place and with tools laying all over the bench is not a happy shop. It is not a shop which can probably get work done on time with the minimum of squawks.

√ A good shop has a complete reference library. Typically, avionics vary dramatically from model to model. A general knowledge of avionics theory is not enough for a technician. The shop should have a library covering the operation of the various gear it works on. All service bulletins and service literature should be current with the latest revisions filed properly.

√ Technicians who are also pilots are preferable to non-pilots. They know how the avionics are used in the real world and can understand the problems faced by pilots much better than non-pilots. Autopilots, particularly, require pilots to troubleshoot them because air work may be necessary to accurately diagnose the problem.

√ Training is important. And the training should be of all technicians, not just the shop manager. Various avionics manufacturers offer schooling on most of their equipment and this training is important in helping technicians to rapidly find and fix avionics problems. In shops where only one technical person goes to school and then attempts to train the others, much is lost in the translation. It is cheaper for the shop to do "training" in this manner, but nowhere near as effective.

And lack of training can completely nullify the advantages which would otherwise accrue from selecting a veteran radio repairman over a novice. The advantage of a veteran assumes that he is knowledgeable about the radios he is working on.

Even a very experienced technician cannot do a good job on a new line of radios with which he has had no experience.

Rigging the Cherokee

by Terry Lee Rogers

An out-of-rig airplane can be a real handful. And a surprisingly large number of airplanes - Cherokees included - are out of rig.

There are pilots who have installed the latest in speed modification kits - gap seal kits, hinge fairings and other kits -without first insuring that their planes were properly rigged and as drag-free as possible.

Many pilots assume that it is normal for an airplane to continually fly with one wing low and for cruise speeds to be well below book values. These conditions, however, are symptoms of an airplane which is out-of-rig and which may be flying somewhat sideways through the air.

An improperly rigged airplane, besides having strange handling, uses more gas and goes slower than a properly rigged model - by flying sideways the drag is dramatically increased.

And an improperly rigged plane can be dangerous.

The job of re-rigging an aircraft falls on the A&P mechanic - it is a job which cannot be performed by the pilot himself.

But the pilot is the one who must determine whether a plane is flying properly or not. Rarely, if ever, is an out-of rig condition found by a mechanic during a normal inspection or maintenance operation. It must be called to his attention by the pilot who files the plane.

All pilots should know what is meant by rigging and how to determine whether it is done properly.

Wing Control Surfaces

When most people think of rigging, the image of the ailerons comes to mind. But before you can even think of rigging ailerons in a Cherokee you must get the flaps rigged properly. The flaps are large control surfaces and any out-of-rig condition can really make the plane fly funny (as well as providing constant speed brakes to your plane.)

The method of rigging ailerons and flaps is spelled out in the Piper Service Manual. The flaps must be properly rigged first.

To rig both the ailerons and flaps you will need to fabricate a special tool. The instructions are given in the manual (see the accompanying diagram).

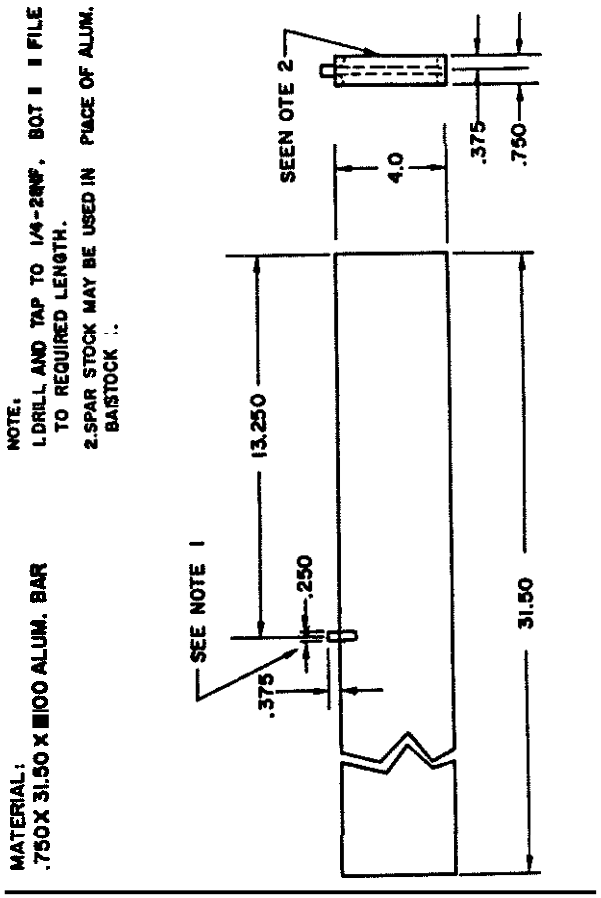

Fabricated Aileron and Flap Rigging Tool

To check the neutral flap position, the rigging tool is placed at the bottom of the wing and flap as close as possible to the outboard end of the flap (be careful not to touch any of the rivets.)

The tool is positioned parallel with the wing ribs and with the back end of the tool flush with the trailing

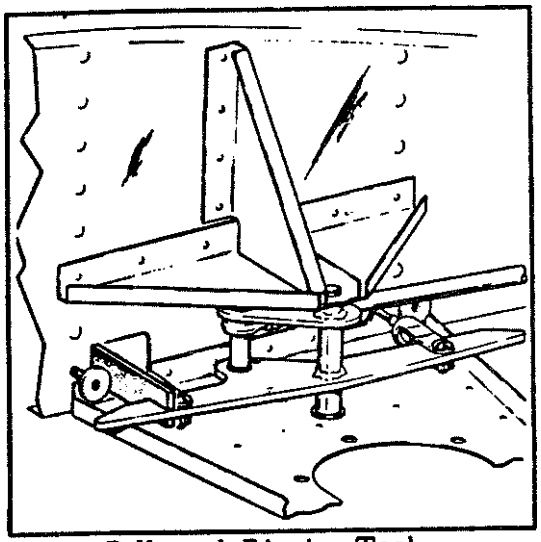

Bellcrank Rigging Tool

edge of the flap.

The wing and flaps should contact the tool at the forward surface, at the spacer, and the back end of the flap should contact the back end of the tool.

If the three points do not contact, the jam nuts on the flap control rod should be loosened and the rod turned until the three points do contact.

You gain access to the jam nuts by dropping the flaps fully and removing the access panels on the underside of the wing.

When turning the flap rod be gentle. Do not turn more than is necessary and keep a record of what turns were made so you can go back to the original condition, if necessary.

Check the other flap and adjust accordingly.

The service manual says that you can adjust either flap down slightly to correct a wing-heavy condition. This may have been done on your plane sometime in the past and you may find that with properly adjusted flaps (according to the manual) you have a heavy wing. You may have to put back some or all of the original droop to correct the problem (but if more than two or three degrees of droop is required, the plane may have been badly damaged during some past incident.)

Rigging the Aileron

Assuming that the flaps are now properly adjusted, you are ready to adjust the aileron rigging.

Some people recommend "eyeballing" the way the ailerons line up with the flaps when the ailerons are in neutral. This may not be accurate, however, because of the possibility of the "flap droop" used to cure a heavy wing.

Also, most people have eyeballs which are not as accurate as a correct jig, so use the method given in the Piper service manual and use the same tool used to align the flaps.

First, the aileron bellcranks are placed in "neutral" position using a specially fabricated tool to insure that each bellcrank is in a neutral position (dimensions for this tool are given in the service manual.)

The bellcranks are reached through access plates on the underside of the wing. They are located just forward of the inboard end of the aileron.

To get the bellcranks properly aligned it is often necessary to loosen a control cable, certainly only a job for a certified mechanic.

Now the rigging tool is placed against the underside of the wing and aileron as close as possible to the inboard end of the aileron. Once again, be careful not to hit any rivets.

The tool is positioned parallel with the wing ribs, with the back end of the tool flush with the back edge of the aileron.

Once again, with the aileron bellcranks both at neutral, the tool should connect with the wing at the forward edge of the tool, at the spacer, and finally at the trailing edge of the aileron

If the three points do not contact the tool, the jam nut at the aft end of the control rod must be loosened and the rod should be rotated until the three points line up.

(Once again, like with the flap control rod, a little bit of turning may make a lot of difference, so proceed at one half turn at a time, and keep a record of what changes you are making.)

Once both ailerons are aligned, your plane should be properly rigged.

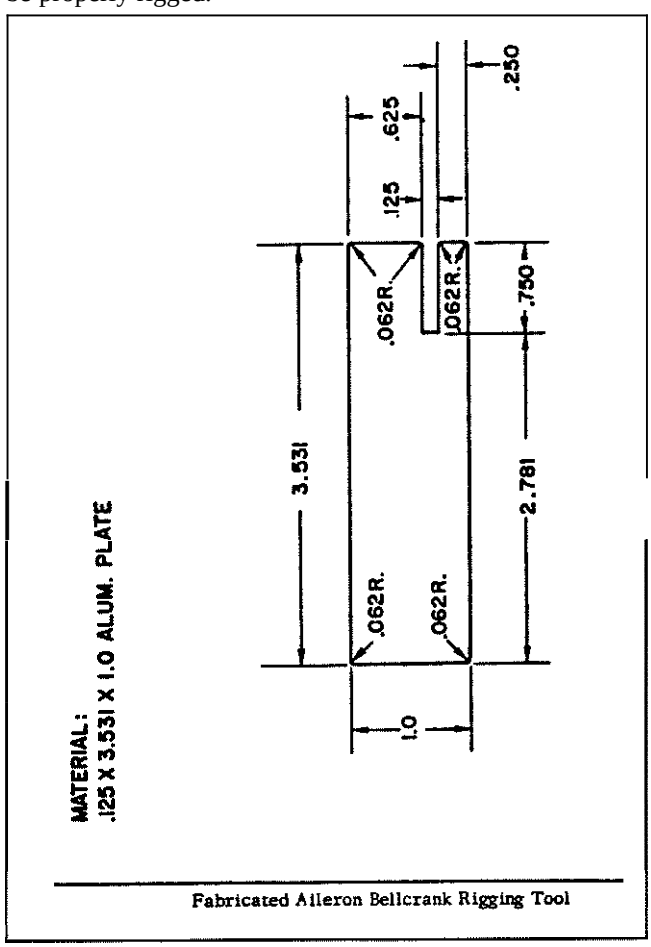

Fabricated Aileron Bellcrank Rigging Tool

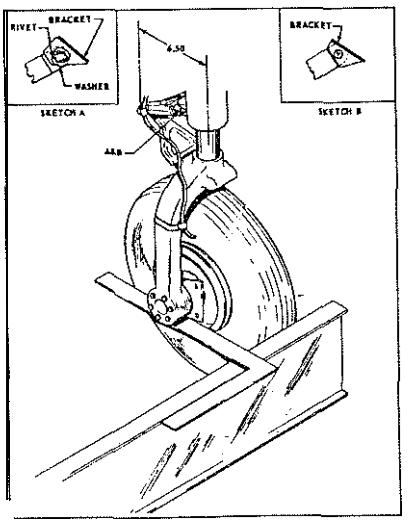

Some Additional Considerations

Proper rigging of flaps and ailerons should correct most conditions resulting in heavy wing and excess drag. It is not a procedure to be taken lightly.

Although any pilot can make the alignment tool, make his measurements, and make his diagnosis of tlie current state of his rigging, the actual job of tampering with the relative alignment of control surfaces is something which can only be done by a certified A&P mechanic.

And all conditions may not be correctable. Ifaplane has had structural damage it may not be possible to get good rigging by following the procedures. The basis airframe of the plane must be in proper alignment.

And as the service manual warns, it is possible that at sometime in the past someone has used the aft edge of the ailerons to move the plane forward. This may have resulted in a slight bulging of the aileron contour at the trailing edge which will cause an out-of-rig condition which is very difficult to correct.

And then, in determining whether a plane is properly rigged from flight testing, remember that a left wing low condition is somewhat normal - where the pilot is the only person on board. One will nearly always be slightly heavy, depending on fuel hum, passengers, and other weight-and-balance data.

When we talk about an out-of-rig plane, we are talking about a constant condition which seems to keep one wing heavy no matter how the load is distributed.

Although the aileron and flaps are critical to rigging, there are other items of rigging and alignment which are important, including engine angle, wing, rudder and elevator rigging and wheel alignment.

Wheel Alignment

The first tirne you may notice an out of alignment condition is when taxiing your Cherokee. Improper wheel alignment may show up in unusual ground handling properties or simply in higher tire maintenance costs.

The main landing gear should have the correct ioe in adjustment. Toe in, which has the same meaning as pigeon-toe in human beings, is adjustable by adding or removing spacer washers from the torque links.

First, a twelve foot or longer straightedge (i.e., angle iron) is placed across the front of both main tires. A square is then placed across the brake disc.

Correct toe in is +1/2 degree to -112 degree and is adjusted by removing tlie bolt connecting the upper and lower torque links and removing or adding spacer washers to move the wheel in the desired direction.

To align the nose gear, the plane must first be jacked and leveled and tlie rigging of the nrdder must be checked.

The nose wheel is then adjusted according to a table given in the maintenance manual and should result in proper tracking with neutral rudder pedals.

Symmetry and Wing Angle

It is possible to clieck the symmetry and wing angle on your plane and it is a good idea before making any other adjustments to adjust rigging.

You can adjust neither the symmetry nor the wing , but if they are out, yon know your plane has been damaged and that you cannot make it correct with adjustments.

To check symmetry, you wait to drop plumb bob lines from identical points at the outboard ends of the wings, and points on the nose and tail. Mark the spots where these points strike the concrete floor of your hangar. (This needs to be done after the plane has been leveled.)

Now, measure the distances between these points on the left side and then the right side of the plane. The numbers should be identical. If they are not, you have cause to suspect airframe damage.

Likewise, although you cannot adjust on a Cherokee, you can determine whether the wings have undergone stresses which have resulted in damage.

After leveling the plwe pick a spot n the wing to make a measurement - the outboard spar is a good choice. Now, from that spar place a level and begin stacking washers under the low end of the level until the bubble is centered.

Now you can use a simple protractor to measure tlie angle. Measure the same angle on the opposite wing using the same method. The angles had better be the same.

Rudder Rigging

Rigging the rudders consists of two steps - insuring the proper angle of travel and then adjusting the control cables.

To check angle of rudder travel you need to make a rudder rigging tool according to the dimensions given.

Placing the tool on one side of the rudder swing the rudder until it reaches its stop. The surface of the rudder should match up with the tool. The operation is then re-

peated on the opposite side of the rudder.

If there is a discrepancy, the tail cone must be removed and the stops can then be adjusted to insure that the travel is correct.

To adjust the cables the rudder pedals are clamped in a neutral position and the adjustment is ntade in the aft section of the fuselage. Cable adjustment is made to both align the rudder with neutral (determined by sightingalong the surfaces of the rudder and vertical stabilizer) and to maintain proper cable tension (35 to 45 pounds).

Stabilator *Rigging*

The final control surface (except for trim tabs) which needs to be rigged is the stabilator. Once again, the plane must be leveled to perform the rigging.

As with the rudder, stabilator adjustment comes in two parts - checking travel and adjusting control cables.

To determine proper travel it is necessary to make a stabilator rigging tool. This tool is then placed on the

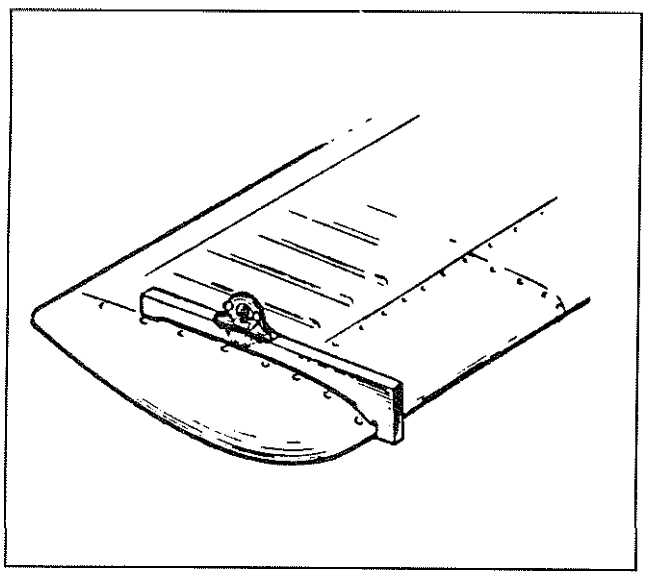

upper side of the stabilator at the outer spar.

A bubble protractor is then mounted on the tool and the movement of the stabilator from level position is checked. (Note: a bubble protractor is an instrument which is a cross between a simple protractor and a carpenter's level.)

The PA-28 maintenance manual shows down travel limits of 2 degrees and up travel limits of from 14 degrees (PA-28-180, S/N 7305001) to 18 degrees (most other PA-28s.)

Control cable tension is adjusted as with the rudder. The control column is first secured in the near forward position with the stabilator itself on it stop. (The difference between the column and stabilator with relation to their stops provides a slight margin of error to insure that you always have full elevator travel available.)

Stabilator cable tension is now adjusted for 35 to 45 pounds.

It should be emphasized again that anyone can make checks of alignment and rigging - the procedures are simple and the tools are common or easy to make. But only an authorized A&P mechanic can actually make rigging adjustments.

The measurementsare, however, easy to do and once the rigging checks have been made you can be sure that your plane is flying straight through the air and not sideways.

Knots-2-U Report; Other Comments

Gary Adams and Linda Wilson

In our last letter we mentioned that we had purchased the Knots-2-U gap seal kit along with the hinge fairings but had not yet installed it. We did install the kit in December 1991, and am happy to report that Jim Bradshaw's product was well worth the investment.

One of the important features that helped me decide to invest in Jim's product, besides the performance increase, was the "complete" documentation and instructions with the kit along with "all" of the parts required for installation (including the weight-and-balance and STC).

You do need to provide the proper tools (drill, pop rivet tool, rivnut tool, etc.) The installation went well. I might add that the second side installation took substantially less than the first, but Jim's installation timing stats were fairly close.

We are very happy with the installed Knots-2-U kit. We ordered the complete kit (quantity price break) and installed all but the stabilator gap seal, primarily because of the numerous rivets that have to me removed and replaced.

We do, however, plan to install it later. We did not really do the before and after tests that Jim outlines in his documentation for more accurate testing. At installation time I had flown 300 hours in one-and-one-half years of flying 41W and I felt that any change would be noticed.

The most noticeable change was in the increased rate-of-climb at take off Taking off at Fullerton Airport in California, at +100 feet above sea level at standard temperature, winds less than six knots and fully loaded, we noticed an increase of 100 to 150 more feet per minute. With all of our cross country flying and the high density altitude airports we have to get in and out of, that increase was welcome.

I don't think our particular Cherokee gained the 6-7 mile increase that Jim advertises but we are very happy with the overall increase in performance.

We would also like to share some other areas that might be of interest to your readers. We have approximately 1800 hours SMOH on our 0-320-E2A and are anticipating many more hours before that expensive rebuild. Your articles on engine rebuilding have been invaluable to us in planning for the big TBO time.

One thing that I have come to believe is that more frequent oil changes and oil analysis are probably the single most important thing you can do to get your engine to TBO.

I am changing oil every 25 hours and sending off for the analysis every two or three changes.

So far, so good. I am also switching to Phillips oil which is much more economical than the Aero-Shell 15-50 that I have been using.

Everyone that sees our airplane compliments us on our "new" paint job that is going on thirteen years. Since I do not have 41W hangared, I do spend a lot of time keeping her polished.

Here is my secret. I use the "Wax Shop" product line and have used it for all my vehicles (cars, boats, and plane) for the past ten years. Their Super Glaze wax product is noncorrosive and effortless to use.

Wax Shop is now sold in some retail stores, in the past you had to purchase it form a private distributor. I have been purchasing their main line of products, by the gallon, for many years now. I can wax and polish out my plane in as much time as it takes to wash and dry it! Wax Shop products are GREAT and I have gotten many people to use them in the past.

No, I am not affiliated with Wax Shop - I just love their products. Try it - you'll like it...

Answers on Auto Fuel Vapor Lock

In response to a reader's questions concerning a problem with vapor lock in a Cherokee 235, Todd Petersen, of Petersen Aviation supplied the following:

"I am aware that the problem you describe can occur in the PA-28 with smaller engines, but I have not previously been informed of such an occurrence in the 235.

"Regardless of the engine, the problem is due to the higher vapor pressure of auto fuel. Whether the fuel is leaded or unleaded is irrelevant. I am sure you already know this, but for purposes of the discussion I'll repeat it anyway. The RVP of avgas is 7. Auto fuel RVP can vary from as low as 7 to as high as 15. Both extremes are rare, but possible. A more likely range is from say 9.5 to 13. The higher the vapor pressure the greater the chance of vapor lock. Under some of the Clean Air Act rules vapor pressure is held to lower numbers and some locales have their own rules that keep RVP low.

"Other factors can also enter the equation. I have spoken with PA-28 owners on numerous occasions and while one owiier may have a vapor lock problem, another with an identical airframe operates in the hottest of weather with absolutely no trouble. Thus, the condition of the fuel system should therefore be taken into consideration.

"Crimped fuel lines and undersize fittings could contribute to vapor lock. Also, the more bends and elbows the greater the pressure drop. That is, a 90 degree fitting does more harm to fuel flow than, for example, a gradual bend in tubing.

"Also, as you found out, your fuel pump was not putting out as it should have been. All of these things taken together can contribute to the problem. I think that these examples explain why one airplane has absolutely no problem on the hottest of days, while another identical model may have a great deal of trouble on a day of say 85 degrees or less.

"Regardless of all this, as you point out, your particular airplane had no trouble once you switclied back to the lower RVP avgas. Therefore, the root cause remains a high RVP and HOT FUEL.

"In both instances you relate, the difficulty occurred when the fuel had an opportunity to become hot. Were the fuel tanks above ground and in the sun, or below ground'?

"What about the fuel itself? Do you know the brand name and when the fuel was obtained by the FBO'? One would expect FBOs to be careful about how much fuel they purchase if they are doing so during a time of the year when high RVP fuel is being shipped. But we know that this is not always the case. FBOs sell arelatively small amount of fuel, and if he bought this fuel in the spring then it could easily have had quite a high RVP.

"According to D-4814, fuel in Utah would have an RVP as follows: Jan. 15; Feb. 15-13.5; March 13.5; April 13.5-11.5; May 11.5-10; June 10; July 10-9; August 9-10: Sept. 10; Oct 10-11.5; Nov. 11.5-13; Dec. 13.5-15.

Therefore, unless the FBO obtained a large amount of fuel at the beginning of May the fuel should not have been any higher than 10 and perhaps as low as 9. The only other thing I can think of that could enter into this is whether or not the fuel contained alcohol, which will significantly increase volatility and hence vapor lock potential.

"Many pilots return to avgas during hot weather regardless of airframe type. Some for all flying - that is, takeoff and cruise, others only for take off and landing. I continue to rely on the Hodges tester as the best means of determining beforehand the capacity of the fuel to cause vapor lock. The FBO might not like it when a pilot insists on testing the fuel, but it would be preferable to having an experience like yours.

"The biggest problem with it is that after using it time after time and receiving safe readings, many pilots become complacent and then stop testing the fuel altogether."

Piper A/C & Alternator Belts

I noticed a letter published in the April POM regarding non-availability of Piper part numbers 452-823 and 452-824; air conditioning and alternator belts. Also the writer was not sure of the part numbers.

Our fellow members might wish to note that 452-823 has been replaced by Piper with P/N 568-851 and 452-824 has been replaced with 564-850. These new part numbers are now available in the Piper system. We have them in stock at Air Parts of Lock Haven (Florida store).

Yes, the Piper Archer II uses these same part numbers as do most prior Cherokees with the Air Conditioning systems.

Sincerely,
Sam Price, Jr.

Stuck Screws; Ground Running

by Harry F. Wells

Recently you provided numerous suggestions on removing rusted screws. All of them were A-1 and nobody hates rusted-in screws more than those of us that have to work on them. Over the years I have tried just about all of the things you suggested, but I have one thing to recommend that has worked for me.

You mentioned penetrating oil which is fine, as far as it went. And I want to mention 1 do not own stock in the following company - in fact, I am off their mailing list for not purchasing more of their product. But it does last a long time and it is GOOD!

The name of the product is KROIL made by the Kano Laboratories, Inc., of 1000 S. Thompson Lane, Nashville, TN 37211 615-833-4101. They only sell direct and from time to time I do see them in Trade-a-Plane.

I have other penetrating oils in my workshop and occasionally use them on what I would call a normal job. When that fails out comes the Kroil. If Kroil cannot do it then throw the part out or drill it out and do areplacement.

In fact, I had a nylon rope of about a half inch diameter and used it for tie downs. I used it to pull my car a few times, too. One time a knot was left in the rope after a car was pulled more than once. Using Kroil and arounded off screwdriver tlie knot was loosened. Prior to that hours had been spent using all other methods to no avail.

While there is no promise made by any penetrating oil maker to untie knots, it untied mine. So for what it is worth, pass it on. I have been working on aircraft for more than 30 years and I go nuts if I mislay this product.

On another topic, this may be a little late for winter problems, but previously I lived in Michigan and ran a small sod field operation. When we were snowed in and only those of us with skis could fly, some of the plane owners would come out and run their engines for ten or fifteen minutes to "keep them limber."

No matter how 1 tried tliere were always those few that insisted on ground running. This is very bad for the engine. Pulling them through ten or twenty tunes would be far more helpful. Or pull the top plugs and squirt a little oil in and then pull them through a couple of times.

I always told them that I would be happy to overhaul their engine, but would rather have them spend the mouey on fuel to fly than to have them run an engine on the ground at all. On a tightly cowled powerplant you can really work up a can of worms.

Comments on Arrow Gear

by George A. Durhatn Jr.

Recently, Phil Conner asked a question about his 180 Arrow. It is always difficult to have a perfect airplane and still have problems.

As he mentioned, his maintenance shop had "rebuilt" the nose gear linkage and had done countless gear cycles and still cannot find the problem. As to Phil's clunk and feeling in the rudder pedals upon extension, this is fairly normal. However. the clunk can be mostly eliminated by a proper tensioning of the nose gear trunnion bolts with a good set of mounting bushings. They should be snug, but not tight enough to limit free action.

As to the gear light going on and off with a corresponding in-transit light flashing, this condition is also normal. Any time one of the gear down lock switches are not in the full lock position the pump will come on, thus giving you an in-transit light. The pump is trying to reset the switch.

When a gear extension is made the nose gear may activate the down lock switch before the main gear drops completely (it is lighter and going down into the wind). As the main gear drops it may cause the nose to unlock and then fully extend after adequate pressure from the gear pump is applied to the nose actuator cylinder.

With regard to the gear light going off and right back on during turns on the approach to landing, this may be caused by a worn down lock hook or mis-adjusted nose gear down lock switch. If you pay special attention to the small details the problems can undoubtedly be resolved.

Wants Better Alternator & A/C Belt Nos

by C. R. England Jr.

Regarding Gates parts numbers for Archer II alternator and A/C belts - apparently they are the same for 180s and Archers. The Piper part numbers are 452-823 and 452-824 respectively and transcribe into the Gates numbers 8903-1030 and 8904-1060 respectively.

These are Gates industrial belts rather than automotive belts and automotive parts distributors will not recognize tlie part numbers. They catalog the belts as 7M1030 Polyflex and 11M1060 Polyflex, respectively.

By the way, an aircraft parts distributor said he had found a source and could get me the A/C belt for $42. I bought the 11M1060 from a Gates industrial distributor for $17.50.

Seating Change Very Pricey

We currently own a 1984 Saratoga. We purchased the plane in December, 1992. Previously, we owned a 1973 Cherokee Six with straight seating.

We would like to change to straight seating in the "new plane". We called Piper, to inquire if this could be done. They referred us to a company in Grand Rapids, Michigan, which they said could do the work for us.

Now conies the "hitch". We've never had "sticker shock" on anything for the planes from paint, to radios, to annuals, etc. This gave us STICKER SHOCK !!! $5000 to $6000 to turn two seats around?

Can this be? Is there anyone out there who knows some way to have this accomplished without paying off the

nation's Debt?

Being "rookie" pilots, two years, we really don't know all the sources for what we need.

John & Diane Jordan
Clio, MI 48420

Dear John and Diane,

We get calls about seating on PA-32 models from time to time. Generally, the owners want to convert from straight seating to club seating. Unfortunately, as you are now aware, it is not merely a simple afternoon job and the FAA requires a lot of paperwork and testing of such things as seat belt anchors, etc.

I wish 1 could tell you there is some simple, inexpensive cure, but there isn't. The best advice for anyone purchasing a PA-32 would be to buy one configured the way you want to fly it. For most people the sticker shock will be far too great to permit the modification to be made.

More Tips For Rusty Screws

by Paul Israel

A recent issue discussed methods to unstick rusty screws

Here are two other ways to do it.

1. You can get a screw and bolt remover from Aircraft Tool and Supply Co., or U.S. Tool.

This is a device that fits in arivet gun. It has a long handle on it that allows you to apply torque to the screw while vibrating it. I do not recommend the local hardware store type that you hit with a hammer while twisting the tool. Most aircraft skirr is too light for this.

2. You can use a hammer and chisel. Hold the chisel 90 degrees to tlie head of the screw and make a notch in it. Then turn the chisel to 45 degrees and drive the screw counter clockwise to loosen.

I used this method to remove all of the screws from one of my fuel tanks. I have also found it useful in many other areas.

STOL Kit Report

by Douglas Dunn

Carole and I installed our Horton STOL and gap seal kits in the spring of 1991

In a recent issue a reader wanted information about flying with the STOL kit. I would suggest he first call Horton Industries and get their tech figures for his plane, then experiment at altitude with his aircraft.

As for us, the following works well. With 10-20 pounds in the baggage compartment, the two of us (350 pounds) and any fuel load, we rotate between 40 and 45 mph indicated.

As we rotate we pull two notches of flaps and climb at 50-55 niph. At full gross we add about 10 mph. This gives the nose a very high attitude and there is no forward visibility. There is very little cooling at this speed and angle so watch the temperature gauges.

Short Landings: We approach at approximately 60 mph, 1500 rpm, full flaps, cut power at 15-20 feet, flair at approximately 40, remove flaps at touchdown, then apply brakes.

Horton says our 1965 Cherokee 180 will get off at full gross in 300 feet and down in 300 feet. Horton does not mention that the airplane's normal glide will change more to the float of a C-172.

The STOL kit consists of six fences, Seneca-style wing tips, leading edge cuffs, a very large dorsal fin and six vortex generators on the left side of the tail.

One more item - when taking off dirt, gravel or "ruff' runways, use full up elevator, easing off as you accelerate. Keeping the nose wheel light but on the ground until rotation, will help keep the prop tip out of the rocks.

Easing the power to full while rolling the first 100 feet or so will greatly reduce the vortex that feeds rocks into the blades.

Radio Noises

by Terry Lee Rogers

Cherokees can present their owners with a variety of radio noises and interference, and sometimes it is a difficult chore to track down the problem. Like elusive water leaks, radio noises are a problem, the solution to which can be maddening.

Although it is impossible to cover all possible noises and their causes, some of the more common can he looked at. But there are no simple solutions to solving radio problems.

Generating System

The older-style generators had commutators lo provide direct current to the aircraft system. These commutators were mechanical rectifiers - a rotating switch - which produced arcing which generated considerable electrical noise.

Unfortunately, it is about impossible to eliminate the arcing completely. The best cure is to place a radio frequency filter close to the generator.

It is also important to keep the commutator and brushes as smooth and clean as possible. It might help, also, to ground the generator frame.

The introduction of the alternator helped, but did not eliminate the problem. The alternator uses a rectifier to change alternating to direct current, eliminating the commutator.

However, the alternator, too, has brushes, which run along slip rings. Once again, arcing can develop and the cure is the sane as for generators - mounting an RF filter as near the alternator as possible.

And the diodes which act as rectifiers in the system present problems of their own. They act as electronic switches, but they, too, can make clicking sounds that sound

just like the old commutator noise. If the filtering and grounding techniques described do not work, replacement of the diodes may be the only cure.

The voltage regulator, too, is a prime source of noise. Some regulators have vibrating contacts which can produce a buzzing noise which varies according to load on the electrical system.

More modern regulators are "solid state", but as is the case with alternators, this may not eliminate the problem. Once again, the transistors in the system act as electronic switches and they may generate the same type of noise as the mechanical regulators.

Filters are available to connect to the regulator and this should be tried whenever this noise occurs. Older mechanical units, with pitted contacts, must be replaced, however.

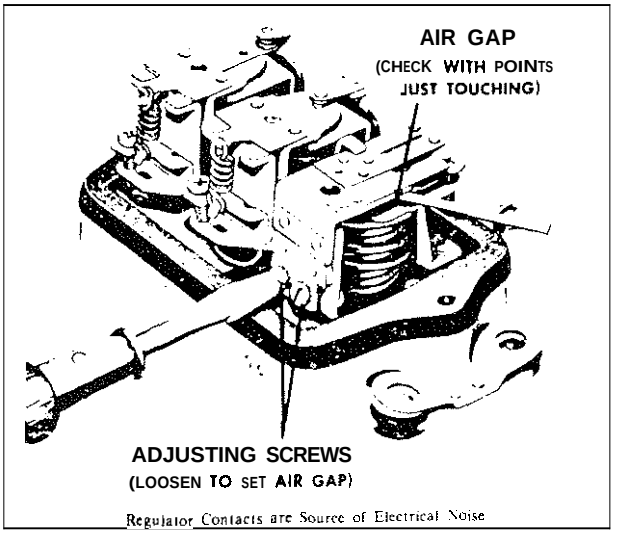

Regulator Contacts are Source of Electrical Noise

Strobes and Rotating Beacons

Strobes generate a repetitive whine which rises rapidly and then falls when the lamps discharge.

The power supply must be properly grounded and a separate grounding strap may be useful (some units, however, were designed to be insulated from the main aircraft airframe, so use caution in making the change!)

A radio frequency filter at the DC power input to the power supply should be installed. This filter is, in effect, a capacitor which fits across the terminalsand "grounds out" any radio frequency voltage present while permitting direct current to pass.

The leads to the lamps themselves must be shielded to eliminate radio frequency leaks and, once again, filters should be installed, both at the power supply itself and at the lamps.

The lamps, also, emit a large amount of radio frequeucy energy, and can produce a pop in the radio speaker. Grounding the lamp case and filtering the cable are necessary to reduce or eliminate the problem. Be careful to keep other electrical wiring away from the wiring of the strobe lamp system.

Rotating beacons can emit a whine caused by sparking of the brushes in the motor. Once again, an RF filter installed at the motor should help somewhat.

Batteries

RF filters are good at eliminating specific sources of interference. But are you aware that the aircraft battery, too, acts as a giant RF filter?

Besides storing electrical charge to *start* your plane, the battery also acts as a large electrolytic capacitor. It can eliminate some voltage surges in the system and can also dampen out much of the radio frequency interference which enters the system.

The battery is large however, and does not *function* well at eliminating frequencies above 100 KHz. Such frequencies can pass through the battery and enter the electrical system. **An** older battery which has loose internal components or loose terminals can generate more noise than it *dampens.*

Be sure to check the battery regularly for corrosion at battery posts, correct water level, and general integrity. Also, make such a check after each traumatic event, such as an unusually hard landing.

Incidentally, the battery posts are similar to an automotive battery, however, a bolt has been imbedded into the molten lead to provide for connection to the aircraft cables.

This bolt can and does become loose and can generate *noise* as well as resistance in the system. A loose connection will also generate resistance and, when combined with hard cranking, can actually cause enough heat to melt the battery post. Do check those connections.

Atmospheric Problems

An aircraft in flight can receive an electrical charge which can play havoc with radios. Precipitation static results where rain, dust or ice particles are stmck by the plane.

Even without these particles, St. Elmo's Fire, also called the "Corona," may result in clear air. The build up of electrical charges results in a pale blue discharge which is quite spectacular and frightening to those who are unaware. Static wicks, mounted on wing and tail surfaces, can help by draining the charge from the airplane. Good connections are a must to insure that the draining occurs.

Also, the system will only work where the plane is electrically integrated. "Hot" panels, such as loose or not properly bonded inspection plates, etc., result in the inability to discharge the airframe completely of its electrical charge.

This is the reason why new aircraft have bonding straps between the airframe and ailerons, the rudder and the stabilator. The straps are provided to insure that there will be a proper electrical connection between these parts and the main airframe.

Rubbing Surfaces

Any mechanical parts which rub together can induce electrical noise. Metal panels of the aircraft, doors moving on their hinges, wheel bearings, and all control surfaces can all generate noise.

Any adjacent metal panels, such as an inspection plate over the airframe, can rub together and cause a buildup and discharge of electrical charge. Wherever there is any doubt, the surfaces should he bonded together (using flexible cable where necessary.)

And of course, the radios themselves must be properly grounded to the airframe.

To properly ground equipment or parts, good electrical contact must be made. This is not always the case. What appears to be a good connection might not be.

Sometimes the problem is a painted surface. (We periodically get reports of battery ground straps on Cherokees which have been attached to a painted surface without properly removing the paint and insuring a good contact - guess what this does to the starting.)

Also, anticorrosion coatings may have been applied and this will act just like paint - a good insulator. In either case, the coating will have to be removed to permit proper electrical bonding.

Corrosion between bonded parts also can act as an insulator and where this occurs, the parts will have to be separated and the corrosion removed.

Incidentally, if you are not aware of the technique, those little star washers (with little points on them) have a real purpose: they are not for show. They can help provide a good electrical connection by penetrating sealant and corrosion and actually penetrating the metal itself.

Antenna Problems

One of the biggest problems with avionics is worn or defective antennas. Obviously check for loose or corroded antennas or connections. Make sure tlie base is properly mounted to the airframe and that there is no corrosion underneath.

Check inside the plane for frayed cables or loose connections. Have the radios on while you jiggle cables listening for static. DO NOT allow anyone to push the transmit button while you are jiggling cables or checking out antennas!

Cables which appear all right from the outside may have suffered internal corrosion and be in need of replacement.

Obviously, check all connectors for tightness and for signs of corrosion. These are spots where trouble often develops.

Be aware that installing avionics involves more than just stringing cables. It is not like using an extension cord at home to plug in the television. Avionics are prone to interference. The location of the cables and their proximity to each other may be critical.

Transmitter cables should be kept away from audio and speaker cables. This includes microphones aid intercoms. Transmitter cables may radiate RF which can be induced into the system through audio cables resulting in feedback in the speaker as well as other interference with both navigation and communication receivers.

Reporting Squawks

When reporting a squawk to the person who will do the repairs, it is essential to be as specific and accurate as possible. "Radio not working" is not very useful in diagnosing aproblem. This is especially true in cases involving intermittent problems which may not manifest themselves at the time the technician services the unit.

Sometimes even items which seem trivial to the pilot will prove highly useful to the technician working on the radio. At a minimum try toreportthe time, place, weather conditions and what other equipment was in use at the time the failure occurred.

And of course, make sure yon know how to operate the equipment before you write up tlie squawk. It sounds ridiculous, but perfectly good radios are taken in for service each year when all that was wrong is that a switch or knob was set incorrectly.

Unfortunately, although this article gives an overview of some of the problems which can cause noise in the aircraft avionics system, there is no simple way to solve the problems in most cases.

Some problems may mask others. And sometimes hacking down the offending part can be difficult indeed. But by systematically tackling the task, a plane owner dramatically increases his chaice of eliminating the problem and restoring noise-free radio operation to his plane.

Hard-to-Find Parts Source Recommended

One constant problem which keeps coming up concerns hard-to-find parts. Some parts, in particular, are really scarce and unavailable from Piper.

Aviation Consumer magazine recommends a source for those really hard-to-find items. It is Aero Parts Finders, John E. Aiistensen, 8184 N. Tamiami Trail, Sarasota, FL 34248 (813) 351-2215.

Anstensen is a fonner Piper distributor who still keeps in touch with other suppliers, distributors, and FBOs. He maintains an inventory of parts for regular customers, but in addition he specializes in locating hard-to-find parts.

When he finds what you need lie calls with a quote. If it is acceptable he acquires the part and has a local IA inspect it for airworthiness before it is shipped to you. He can also have them repaired, if necessary.

He should be considered a good source for items you cannot find anywhere else - airframe, electrical, or instruments. However, do not call him with a laundry list of miscellaneous aircraft parts needed just to compare prices - he really does specialize in those rare hard-to-find items.

Bleed or Repair Seat Cylinders

by Rick Poe

I was told by Piper the Hydrolock cylinders on my Warrior were not re-buildable. They recommended I replace them for $300. 1 am a mechanic for TWA and know theirs are re-buildable so I decided to try to repair mine.

Mostly all that is wrong is they are spongy (need to be bled). I made a tool that worked very well and is very simple to make and use.

Also you can send your Hydrolocks to the manufacturer, PL. Porter and they will overhaul them for $75.00; their number is (818) 884-7260.

Two Letters On Arrow Gear Door

1 own a 1970 piper Cherokee Arrow (PA-28R-200). When I had the airplane repainted last Fall, the paint shop noticed the same thing about my front gear doors. They just do not fit right. In fact, they are the same as you described in the article (about an inch gap in the front of the doors).

I was considering purchasing some good "used' doors from Wentworth Aircraft Inc. (612-722-0065), but when I found out tlie price of some good used ones, I just flipped. They want a staggering $450 per door, totaling $900 for the pair (for "used" doors).

There still wouldn't be any guarantee that they would fit right. I then asked my mechanic (who has been fixing airplanes for 47 years now) who I caii trust. He told me that he knew about my doors not fitting exactly right, but he thought it was no problem. He said it wouldn't be worth $900 to take a gamble by trying to find the correct doors to fit.

He said that there is no danger or problem with flying the airplane with my present ones, tlie only thing is that I might have to sacrifice one or two mph in airspeed.

With this bit of knowledge, I have decided to leave "well enough alone" and I will be glad to sacrifice the one or two mph instead of $900 plus to hopefully correct the situation.

Gene P. Durieux
Grand Forks AFB, ND

(And read the following letter)

I experienced a problem in 1987 that sounds similar. During an instrument training flight, on final approach, I pulled the hood off at 200 feet only to find that all three greens and the gear unsafe light were on. My plane is a 1981 Arrow.

After a go around, cycling through the manual gear down procedure and two tower passes, we landed, With the engine shut down we found the hydraulic pump was running. The problem was eventually diagnosed to a failed 0 ring. System hydraulic pressure was insufficient to shut down the pump in tlie gear down position. As long as the hydraulic pump was running the gear unsafe light is on.

This 0 ring is a high pressure 0 ring - a standard 0 ring will blow out.

Dick Bogart was the A&P who fixed my plane. Dick is a routine advertiser in POM. His business is Bogart Aviation in Prosser, Washington. Dick is one of the most honest and knowledgeable A&P businessmen in the business.

Since Piper wanted to replace the entire hydraulic control mechanism rather than the damaged 0 ring (at their outrageous prices), Dick contacted the component manufacturer and obtained the proper 0 ring specification and repaired only what was needed.

Bill Stokes
Concord, CA 94521

Cracks Found In Intake Tube

by James Beringer Jr.

I have owned a PA-28-140 for just less thaii two years now, aid have recently been through the second annual inspection. The outcotne of this may be of interest to some other owners.

During the last six months I have noticed ared stain on intake tube number 3, so during an oil change last summer my A&P replaced the gasket. After a few more flights the red stain was back.

The stain begins at the gasket and extends down the tube about 1.5 inches. A leak in this area could cause air to suck up the intake during flight and lean that cylinder to the point of failure. At annual time it was discovered that the intake tube was cracked just below the lip at the cylinder head end.

I would caution all pilots to be aware that cracks in these tubes aid the resulting fuel and air leaks can he a real problem. I am glad I use 80 octane RED fuel so the leak could be seen.

Hush-a-Corn Repair

by Ward G. Graham

Some other of the CPA readership may also be usme the Hush-a-Com intercom system and may want to know where to find support for it.

Revere Electronics, the original company, has gone out of business so there is no purpose in calling or writing them.

In the providence of God, however, Anderson Electronics has assumed tlie support for the Hush-a-Con1 Their address is 1306 Argonne, South Euclid, Oh 44121. They have a watts line: (800) 248-1441. Their commercial number is (216) 381-1450.

Ray Anderson is presently repairing a "glitch in my set. I promised to tell the CPA gang how to get in touch with him.

Strobe Power Supply Repair

by Tom Phillips

For those with a malfunctioning strobe power supply I would like to pass along a good word about the excellent service and reasonable prices available from the Whelen Engineering Company.

The wing-tip strobes on my 1979 Archer suddenly stopped working. I suspected the power supply as the source of the problem since it had gone silent.

The strobe power supply in my plane is mounted in the tail compartment opposite and slightly aft of the battery. It is fastened to the airframe with four screws and electrically connected with three plugs (one power and one for each wing-tip strobe).

This configuration may vary depending on your installation. My power supply had two additional outputs which were all clearly marked on the case. For those who are unsure all the wires should be marked before anything is disconnected.

I first verifiedthat the unit was getting 12 volt power when the appropriate switches were turned on. Since that checked OK, I removed the power supply and called Whelen Engineering.

They said that if the unit was repairable they would fix it for a $42.00 flat rate. Additionally, they would pay the return shipping if I included payment when I sent them the unit.

I ground shipped them the unit with my $42.00 check and eight business days later it arrived back via UPS 2nd day Air!! Reinstallation was a snap and everything worked fine.

By the way, the best price I found for a new unit was $233 plus shipping from Chief Aircraft Supply, another company that gives great service.

Contact: Whelen Engineering Co.. Inc. Route 145 Winthrop Rd., Chester, CT 06412 (203) 526-9504.

Alternate Air Saves the Day

I'd like to share anexperience 1 had recently in my Arrow 180, and ask for some advice; it concerns the use of the alternate air control on this fuel-injected engine (IO-360-B1E).

At the end of a 90 minute flight and a long night IMC descent from 9,000 feet in wet snow but no ice, temperature rising from about 5 C to I C during the descent, the engine suddenly lost power as I was leveling for final approach vectoring at 2,500 feet.

As best I recall, the engine was winding down to a stop as I called Approach and began the emergency procedures of switching tanks, fuel pump on, alternate air open, mags switched, etc. Things were such a flurry as the controller turned me direct to the airport that I can't report much on cause and effect.

I do know that the engine did not immediately get healthy when I opened the alternate air door, and that both mags felt sick some tune after the initial power loss. Yet in a minute or two I had smooth power back, and was able to hold altitude at the MDA and finally do a circling approach right at minimums, with considerable help from a great controller. The engine felt fine on a full-power run-up after landing; heavy wet snow was falling, with an air temperature right at freezing.

In the shop the next morning we found a sopping wet Brackett air filter element and plenty of water pooled up in the air filter housing. All fuel supply lines, filters, and injectors checked out fine.

My mechanic came to the conclusion that wet snow had frozen in, and clogged, the air filter element; and that either when I opened the alternate air door manually or when it opened automatically against its spring, a big shot of water went through the engine, causing it to run rough for a period of time.

A test flight and subsequent three hour VFR flight revealed no problems, the engine was strong and smooth. I found some material in the LPM book series describing the importance of the alternate air supply, and decrying the lack of specificity in typical Pilot Operating Manuals with regard to its use.

My Arrow's manual certainly doesn't provide any guidance, other than including an alternate air check in the pre-take off checklist.

Should one open the alternate air door manually in flight if heavy snow is encountered'? I believe 1 am going to start doing so unless I hear a good reason not to, as I am fairly certain that my exciting experience was caused by a snow-clogged air filter.

Forrest M. Holly Jr.
Iowa City, IA 52245

Dear Forrest,

The problem with operating the engine with the alternate door open is that the engine is then using unfiltered air for operation. Not a major problem at altitude, of course, but it becomes just one more thing to try to remember before contemplating a landing - and of course, many pilots will forget to close the thing.

The real cure is for people to be aware of what the alternate source is for and what it does. A yellow stick-um in the pilot manual with some notes on its operation might be enough to remind each pilot of the use of this door and what its effect might be in case of a real emergency.

Breaking in an Engine

(From Lycoming Flyer)

Everyone knows that you cannot just throw in a new engine and then take off. If you want a new or rebuilt engine to last there is the minor problem of breaking it in.

Service engineers at Textron Lycoming get a surprising number of telephone calls askingabout engine break-in. Because aircraft owners who are having a replacement

engine put into their aircraft are interested in achieving the maximum in service and performance from that engine, a review of break-in is in order.

Textron Lycoming Service Instruction No. 1427A is entitled "Engine Test After Overhaul With Engine Installed in Aircraft." In some ways this title is misleading because the procedures for break-in are not limited to overhauled engines.

Any Lycomingreciprocating engine installed in a fixed-wing aircraft as areplacement should be subjected to the break-in procedures recommended in this service instruction. The enginemay be new, re-manufactured, or overhauled.

Even an engine which has had a cylinder replaced, or just had new rings installed after the cylinder barrels were re-honed, should be broken in all over again.

What is the objective of the engine break-in? To obtain a gas and oil seal between the cylinder walls and the piston rings while also keeping friction to a minimum. This objective is achieved by first ground running the engine as prescribed in the latest version of Service Instruction 1427 and then continuing the break-in by running the engine at high cruise power settings during all flights until break-in is complete.

These high power settings cause expansion of the piston rings so that excess oil will be scraped from the cylinder walls. Underthese condition, the oil is not baked into a shiny glaze on the cylinder walls and the rings and cylinders will form the seal which is desired.

Engines which are shipped from the factory in Williamsport, Pennsylvania always arrive with an hour or more of running time in the test cell. This applies to all engines, new, re-manufactured, and overhauled. This inplant test run assures new owners that the engine meets all specification forrpm, manifoldpressure, fuel flow, oil pressure, and the amount of power produced.

Although this test run starts the engine break-in process, a thorough break-in sometimes takes as long as 50 hours. The break in procedure in the aircraft will be discussed here.

Following the initial engine running, the new owner should continue to utilize the recommended power settings for engine break-in until a satisfactory break-in is assured.

Before proceeding further, the subject of oil used for engine break-in should be discussed. Lubricating oils recommended for use in Lycoming opposed cylinder engines are listed in Textron Lycoming Service Instruction No. 1014K along with general infonnation regarding lubrication.

The general rule for engine break-in is: use straight mineral oil. There are a few engine models which are exceptions to this rule. These are: TO360-C, TO-360-F, TIO-360-C, TIO-541, and TIGO-541. These engine models are to be serviced with ashless dispersant oil for the entire life of the engine, including the break-in period.

Certain additional information applies to the break-in of these engine models: 0-320-H, O/LO-360-E, TO-LTO-360-E. Although the general rule of using straight mineral oil during break-in does apply for these engines, Service Instruction NO. 1014K also states that Lycoming oil additive, Part Number LW-16702, must be added to the oil of these engines when the engine is installed in the airframe and every 50 hours thereafter, or at every oil change.

The factory-produced engine, as stated earlier, will always have an initial test run. Installation of the engine in the airframe should be in accordance with standard shop practice. To avoid contamination of the replacement engine, the oil cooler and lines should be cleaned and flushed before they are installed. All vent and breather lines must be properly installed and secured as described in the airframe maintenance manual.

Airframe and inter-cylinder baffles must be installed along with the engine cowling to insure that optimum cooling is achieved, and that engine temperatures are maintained within specified operating limits during both ground and flight testing.

Although all engines shipped from the Lycoming factory have been run in the test cell, an engine ground test in the aircraft as described in Service Instruction No. 1427 will be beneficial for those engines as well as for those overhauled in the field with no test cell available.

On start up it is imperative that adequate oil pressure be shown on the gage within 30 seconds or the engine should immediately be shut down. The engine should be run until it is completely warmed up so that several items can be checked before the aircraft is released for flight. These items include a standard magneto check with the engine producing power, and a quick OFF and ON check at engine idle to insure that the magneto is not hot with the switch in the OFF position.

Operation of the alternator vacuum pump, and carburetor heat or alternate air system should he checked during this period of ground operation. Cycling of the propeller for models with a controllable prop and a brief run to full power determine if any adjustment is necessary.

After a period at idle for engine cool down, idle mixture and idle speed are checked to see if adjustment may be needed. After shut down, the engine should be inspected for oil leaks.

Finally, the oil suction screen, and oil pressure screen or filter should be checked for contamination. If no contamination is evident, the aircraft is ready for flight testing.

The flight test after installing areplacement engine should follow the procedures outlined here. They are taken from Service Instruction No. 1427A.

1. Start the engine and perform a normal preflight run-up in accordance with the engine operator's manual.

2. Take off at airframe-recommended power, while monitoring rpm, fuel flow, oil pressure, oil temperature, and cylinder head temperatures.

3. As soon as possible, reduce to climb power speci-

fied in the operator's manual. Assume a shallow climb angle to a suitable cruise altitude. Adjust mixture per pilot's operating handbook.

4. After establishing cruise altitude, reduce power to approximately 75% and continue flight for two hours, For the second hour, alternate power settings between 65% and 75% power per the operator's manual.

5. Increase engine power to maximum airframe recommended and maintain for 30 minutes, provided engine and aircraft are performing within operating manual specifications.

Avoid low-manifold pressure (under 15 inches) during high engine speeds. Also avoid rapid changes in engine speed with engines that have dynamic counterweight assemblies. This condition can de-tune, or damage, the dampers, rollers, and bushings in the counterweights.

6. Descend at low cruise power, while closely monitoring the engine instruments. Avoid long descents at low manifold pressure. Do not reduce altitude too rapidly or the engine temperature may drop too quickly.

7. After landing and shutdown, check for leaks at fuel and oil fittings and at engine and accessory parting surfaces. Compute fuel and oil consumption and compare to the limits given in the operator's manual. If consumption exceeds figures shown in manual, determine the cause before releasing the aircraft for service.

8. Remove oil suction screen and pressure screen or filter to check again for contamination. After the initial flight has been accomplished and the aircraft is released for flight, it is the responsibility of the owner to continue the break-in procedure. To seat the rings properly, the engine should be run at cruise settings between 65% and 75% power for 50 hours of operation or until oil consumption stabilizes.

If the engine is operated at low power settings during this break-in period, a condition commonly known as glazing of the cylinder walls may occur. When this happens, the ring break-in stops, and excessive oil consumption often occurs.

Extensive glazing can only be corrected by removing the cylinders and re-honing the cylinder walls, Because this is an expensive procedure it is a good reason for accomplishing a correct and thorough break-in of the engine.

Many question which are being asked about engine break-in should be answered by the material in this article. To summarize, these are the items which owners should keep in mind when a replacement engine is installed in their aircraft.

(1) Follow the engine manufacturer's recommendation regarding the oil to be used for break-in.

(2) Run the engine at high cruise power levels for best piston ring to cylinder wall mating.

(3) Continue break-in operation for 50 hours or until oil consumption stabilizes, then switch to an Ashless Dispersant (AD) oil to keep the engine clean during its operating life.

Engine break in procedures are not complicated, but they cannot be ignored if an engine is to have any chance of living a trouble-free life to the point of TBO.

Improve Those Cabin Heaters

by Larry Howard

Just a short note that may help the frozen toes of many passengers in early Cherokees. I used two vacuum cleaner extension (plastic) pieces.

Lay them beside each seat and drill two or three small holes up front in them for heat for pilot and copilot. We fly over Sierras and the Rockies at maximum altitude and they work real well. These pieces can be found in most garage sales for almost nothing. They are fire resistant and fully adjustable and light.

Wants 160 hp Engine Conversion

David L. Stratton, of Anchorage, Alaska, asked about a 160 hp engine conversion for his Cherokee 140. The answer:

We get a lot of calls from 140 owners wanting to change over to 160 horse engines. There is an STC available from U. S. Propeller Service. The STC uses are-pitched 74DM60 propeller and puts out 160 horsepower using 100 octane fuel.

You can contact U.S. Propeller Service at P O Box 415, East Haddam, CT 06423 (800) 873-2388.

Another source you might contact is Peno Yan Aero. 2499 Bath Rd., Penn Yan, NY 14527 (315) 536-2333. They also have a similar conversion.

Bear in mind that all 0-320 engines are not created equal and some cannot be converted to 160 horsepower. According to Lycoming, the following models cannot be converted:

A2D E2D
E2G E2H
E3D E3H
10-320-E2B
EIO-320-E2B

Lycoming says these engines have thin main bearings and a narrow deck, which meals the flanges on the cylinder heads are too narrow.

Otherwise, the conversion seems like a good way to get extra power at a fairly reasonable cost.

Switch Part Numbers; Arrow Gear Problem

by Jim Garrett

I am writing in regards to the Arrow gear problem mentioned in a previous issue as references to a gear squat micro switch..

The micro switch number Mr. Lewis is looking for is 1SEL and it costs about $28 from a micro switch distributor. The a tuating arm number is JE-1 and it costs about $4.

The clunk and feel in the rudder pedals is the nose

gear aligning itself with the rudder pedals and is normal if the aircraft is in a crab when the gear is lowered or the nose gear is not in alignment with the rudder.

The Arrow's nose gear has heavy spring tension built into it to aid in the emergency gear extension, and I have never experienced an unlock condition in mine or any others I've flown. Assuming the nose down limit is correctly adjusted you might try lowering the gear while airborne using the emergency gear extension.

If the problem still exists I would check the springs, the outer should pull 60 pounds minimum at 13.75 inches and the inner should pull 37 pounds at the same length. The down-lock hook spring should pull 10.5 @ 4.5 inches. (All according to my maintenance manual).

Be sure to check the actuator ann for a crack. I had a similar problem with amain caused by a cracked arm but the problem would show up on thejacks.

Isham Third Window Kit Installed

by Jeff Cook

In April (1993) I installed what I feel to be the best "interior" improvement that can be made to a Cherokee, it was the addition of a third window on each side of the fuselage.

I purchased the STC and blue prints from Isham Aircraft and had my A & P do the work. It is best to have someone who is experienced in sheet metal work do the job, because if you cut the hole for the window at the wrong angle or to large you are out of luck.

I was able to work with my A & P on the project; it took us about eight hours and found that if you are careful it is an easy job.

The one hold up I had was the frames for the windows are "Piper parts". I had to wait over two months to get the pieces I needed.

The blue prints have a diagram for the window glass so you can cut your own. If you have a 1501160 or 180, all you have to do to dress out the inside of it and cut the headliner to fit around the window. But in a 140, (which I have) there is a lot of customizing and a visit to the FAA for approval of the additional space behind the rear seats. The increase in visibility and the feel of an larger cabin is well worth the trouble.

Isham Aircraft can be reachedat 4300 Palos Verdes, Valley Center, KS 67147.

Rudder Trim Arm Fails In Flight

by Jeff Cook

I own a 1966 Cherokee 140, and recently I had the rudder trim arm, (P/N # 63457-03, fail during my flight review training.

I was with an instructor who was having me do steep "slip to landing" maneuvers when on about the sixth landing I heard a loud bang. On the ground, the aircraft controls seemed fine, (because the nose wheel was on the ground), and the engine ran smooth so we took off again for another round.

As soon as we were airborne, the rudder pedals felt light but worked O.K., until I pushed the right rudder pedal to make another slip - it stayed down!

YEE HA! There is nothing quite like seeing a runway coming up at you off your left wing tip! Fortunately, I could correct the problem by pushing the left rudder and keeping equal pressure on both pedals.

On further inspection, the rudder trim control am was found to have broken off along the tube where it fits over tlie pedal and bar assembly. My A&P said that it had been cracked for a while but it was on the back side where you can only see with a mirror, so unless you are looking for it, you will never notice it.

The most frightening side of this is the rudder is also connected to this part. If it had broken all the across the tube I would have lost all rudder control!

It is a small part, however it is not a cheap repair. To replace the arm the entire rudder assembly has to be disassembled along with removing the seats, side panels and unbolting the control yoke tee bar. Part (used) $40.00, Labor (five hours) $175.00.

Total time on the part was 2390 hours.

Valve Problems With 100 LL

by Ralph K. Patrick

Last July my wife and I purchased 5628F, a I977 PA-28-151, certified IFR with ARNAV R-30 loran, new Imron paint and 700 hours left to TBO.

The previous owner was meticulous about this bird. Oil changed every 25 hours and over $25,000 in receipts for upkeep and upgrades. He spared no expense, nor have we.

In March of this year on a flight to Oceanside, California, I lost a valve at 7,000 feet forcing an emergency landing at Camp Pendleton Marine Base. The valve was later found in tlie muffler.

Repair costs were $9,50000. not to mention the fun of being forced to land on a military base two hundred miles from home.

In investigating the cause. I have discovered a few disturbing facts. The older exhaust valves in my engine, the 0-320 (also used in the 0-360 and the 0-540) having valves with P/N 75068 or 74541, were never meant to run on 100LL. BEWARE!

Recommended replacement valves are, Superior # SL17540 or Lycoming # LW19001

After talking with several A&P's, Lycoming reps and reading a very good article in General Aviation News and Flyer it is my opinion it would be worth while to replace the older valves and guides with atopoverhaul than to gamble that you are in the right place at the right time. Also, expect two to four times the normal cost of a top overhaul.

Enclosed is a copy of the article from General Aviation News & Flyer. As you will notice, there is no mention of valve # SL17540, which I have verified with Superior

Airparts as their recommended valve.

I have also talked to Dan Poust at Lycoming who was very helpful in sending me the Lycoming Flyer and tooling specification for checking stem clearance every 4,000 hours as recommended.

On returning recently from a flight to Missouri I found you cannot buy 80187 AVGAS in the mid-west and Eastern states as you can on the west coast, making it even more important to call this potential problem to the attention of the owners of the affected engines.

I would sure hope to see some mention of the problem in hopes of preventing incidents such as mine, to any of our fellow pilots.

Wing Spar Was Stop Drilled

I am the owner of a 1976 Arrow with 3241 total hours. I only owned this plane for a couple of months.

During an annual taking place presently the AI discovered a small crack (about two inches long) in a circle like pattern under each wing immediately adjacent to the fuselage and under the spar cap. These cracks on the right side had been stop drilled with a 1/8 inch drill. In so doing. the drill had penetrated the spar for about 118 inch.

My question is: have you ever heard of cracks in this area and what fix on the spar (if any) must be done'? My AI wants to call out an ERR (some FAA engineer). Do you know if this is a requirement. I cannot find anyone in this area (Detroit) who has any comment.

I would appreciate any infomiation on this you may be able to come up with.

Another problem: the AD's on the oil pump were never done while the AI did sign them off on three occasions. My AI, of course, brought them up to date at some considerable expense. Should I contact the original AI or the FAA.

Simon T. Truby
Sterling Heights, MI 48314

Dear Simon,

Unfortunately, to keep your plane legal someone with FAA authority is going to have to inspect the spar and make a determination as to whether it is safe or repairable, I never heard of an ERR - usually the inspector is a DAR (Designated airframe representative) or a DER (Designated engineering representative.) The procedure is for them to inspect the area and then fill out an FAA form 8110.

As to the problem with the oil pump, probably it would be good for you (or your lawyer) to contact the original AI and see whether he agrees that he should contribute toward your new pump gears.

Outboard Motor Supplies Parts

by James T. McNeely

In a recent issue of the magazine a pilot was looking for parts for an Arrow gear motor. The Mercury outboard trim motor is the same unit.

I used the electric hrushes in my gear motor.

Rigging Arrow Gear Doors

by Bob Fox

A couple of CPA members asked if my nose gear doors closed properly afier they saw my bird on the cover of the May issue. I really had not looked that closely before, but on closer inspection, they did not look to be closed flush with the cowl. The pi ture looked suspicions, but it was not conclusive.

During my annual (just completed), J asked my IA, Bob Tenbus, to take a look at the doors. Bob and Ed Gorka found the doors to be quite out of adjustment. The front ends of both doors were quite askew and had a half inch or more gap between the doors and the cowl. The gap between the doors was actually too close in the back. The gap then gradually became quite large at the forward end - almost an inch apart.

We decided to try to adjust the four points where the cowl attaches to the engine mount. After a series of adjustments, with most of them being made at the two forward attach points. the doors fit perfectly.

We had thought about doing what Arnie suggested, hut decided to try this procedure first. I am not implying that some doors may not require some sort of major surgery, but in my case the adjustments did the trick. At tirst glance I thought there was no way to get these doors to fit. They were so crooked! It is remarkable that these changes made such a great difference.

I now recall that when I took off the cowl and placed it on the ground the doors sometimes might not fit and other times would fit perfectly. It is all in the warp of the cowl, not the doors. I was lucky.

A major disadvantage of what we did was the amount of time we had the bird up on jacks and the many retractions to get it just right

On another subject regarding the letter from Alaska about the smell of fuel when changing tanks - J had that fuel smell quite some time ago.

I took the valve apart and was using crocus cloth on the "female" portion and found some porous defects in the brass casting. Unless they were examined closely, they were easy to overlook.

I continued to polish with the crocus and enlarged the cracks quite a bit. They looked like worm holes. I ended up replacing the entire unit for some obscene price. I was told later that I could have filled the holes with Marine-Tex aod used my old valve over. Legal? I don't know.

And on one final subject, although this is old stuff, it is new for me. I decided to install the backup gear extender removal kit. It was fairly easy to do up to the flap cam mechanism. It was really hard to install the nuts on the new micro-switch that activates the gear horn and light if the gear goes up and you lower ten degrees of flaps.

If my Arrow had the override latch I would not

have bothered with the kit. It is not necessary and too expensive for the kit ($168) and labor to install. Since my Arrow does not have an override latch, 1 felt the extender should be removed in case of an emergency and it is not possible to keep holding the override lever.

The kit does not even call for removal of the pitot static mast.

The flap and gear horn and light interlock is really another thing that the lawyers put in to cover Piper's fanny. It makes not sense to me why they thought it was necessary. It also caused 90 percent of the work to comply with the Piper service bulletin.

Tenbus called Piper to ask why this flap switch was needed. The answer: "Because we said so."

Cracked Engine Mount

We have a cracked engine mount. The cracks are at each inboard weld around the tube for the lower LH tube to strut and RH tube to strut. The paint shows signs of stress cracks at the area of the weld.

Stripped and Magnefluxed it showed several cracks on the edge of the welds.

Can we repair this or who can repair it? If it is not repairable where can we find one7 The aircraft is a PA-28-236.

Milo De Grassi
Stockton, CA 95206

Dear Milo,

Engine mount cracks are serious - unfortunately it is an area which does not get its share of inspections.

A mount with cracks can be welded and repaired, but it is tricky. I am aware of two shops which can repair your mount or exchange it for a yellow-tagged unit. They are Mount Central, 9529 Sunset Lane, Little Rock, AR 72209 (501) 565-6100 and Kosola Associates, FAA Repair Station 701-46, P O Box 3529, Albany, GA 31707 (912) 435-4119.

Good Experience Exchanging Engines

by Steven D. Ivy

My father and I decided to overhaul the engine in our 1965 Cherokee 140, N6681W.

I had researched several alternatives from our local mechanic (who builds excellent engines) to Lycoming. My goal was to get the best possible engine at the most reasonable price. I also wanted to do the reinstallation myself so I could get things just the way I wanted them.

Our engine is a 0-320-E2A. My search ended at Colonial Aviation in New Port Richey, Florida (813) 849-1332. Herb Giber, the owner, specializes in Lycoming engines. He also builds them at rock bottom prices.

In our case we decided to exchange ours rather than have to the old one rebuilt. The only thing I didn't replace was the mags, since they had only 20 hours since overhaul on them. Herb prices his engines first, then adds the cost of any accessories you want rebuilt. This allows him to tailor each engine to the customers needs, so in my case I didn't have to pay for mags I didn't need.

The engine for us cost $5,900 which included Cermichrome cylinders, a factory re-manufactured carburetor, new cam shaft, new Lycoming fuel pump and all AD's and SB's. He also made up all new fuel and oil lines.

This engine is rebuilt to new tolerances with the exception of the rod bearings which are .003 under. Since I couldn't fly the airplane to him, due to weather, he even did an initial sun on a test stand for me.

All of this is good, but it gets better. My Father and I decided to load the old engine in our truck and take it to Colonial ourselves. Normally a road trip from Ohio to Florida is a long tiring journey, but Herb had a plan there too. He met us in Atlanta. GA at his friends FBO. There we exchanged engines and money, and were on our way in just a couple hours. This saved us a whole day of driving.

My expenses after installation were the hourly rate for the necessary work done by our mechanic, fire sleeves for the hoses, and various additional work that only applies to our particular airplane.

There was the cracked cooling baffles that had to be rebuilt or just new pieces made, then shipped andpainted. The right exhaust system had to be rebuilt, aid all new baffle seals were installed. We also installed new Lord mounts and installed all new SCAT hoses.

To finishthings properly, we also cleaned and shined the firewall and repainted the engine mount. Working by myself, all of this took some spare time to do, but the value of the experience was immeasurable. My total cost was still less than $7000.00.

During this installation I received excellent service and workmanship from the following suppliers. I would highly recommend them to anyone:

Aircraft Tool and Supply (800) 248-0639, (800) 874-8670
Linda Lou Aircraft Parts (800) 824-9912
Alexander Aeroplane Co. (800) 831-2949
Skybolt Fasteners (800) 223-1963
Dawley Aircraft Exhaust (800) 338-5420
Specialty Hose Co. (216) 497-9650 (fire sleeves)

My special thanks to Linda of Linda Lou Aircraft Pasts. Her kindness and patience are greatly appreciated. Also to Dawley Aircraft Exhaust Systems who rebuilt my unusable exhaust system for $230 as opposed to $1000.00 for a new one from Piper. Their workmanship is outstanding and guaranteed.

Most of all, thanks to Herb Giber and his crew at Colonial Aviation. He endured my many questions and phone calls without a flinch and went out of his way to make me happy. If your plane doesn't need the extra touches that mine did, Herb will install it for you for free. Just tell him what you need in advance, (i.e. fuel and oil lines with fire sleeves, SCAT hoses, and baffling repairs) or buy them yourself and bring them with you.

You can fly y o u plane to Florida (he is near Disney) or he will meet you in Atlanta and install it there. Either way, you will be on your way home in just a couple days with your new engine purring away.

If you want to keep your old case and cylinders, just pull your engine and ship it to him. Keep in mind that it will take a few weeks to get the cylinder and crank work done.

Stainless Steel Strut Caps Cheap

by James Zuelsdork

One thing I couldn't find was a good source for stainless steel strut caps. These caps are 1-112 inches in diameter and I did find a source that was selling them for $11.00 per pair!

After purchase I got to thinking that plumbers use caps like this to cover any holes in plumbing fixtures. I went to a local plumber and he didn't have any in stock but he was able to order what I wanted.

I ordered only one to see if it would be acceptable. I was surprised to find it was identical to the pair I ordered at $11.00. This one cost $ 1.29!!! Hope this helps others looking to plug a hole. My A&P bought a dozen.

Burrs in Brake 0-Ring Channel

by Harry F. Wells

James M. Graham's trouble with his brakes could be something as simple as avery minute burr in the channel that the O-ring fits in.

The O-ring can be a stinker to put in the various places that they appear, and if utmost caution is not used in taking the old one out and putting the new one in. Then you have... TROUBLE.

A good example is if someone carelessly gouges out the old one with a sharp instrument, then a slight nick will be left on the O-ring channel which will quickly damage any and all O-rings. Cleveland brakes are the best...bar none.

I just bad trouble with a generator that would not keep the charge. The commutator was wom, so off to the shop it went. It came back all nicely undercut. We sent the regulator to have it matched but the repairman took one look and gave it back to my parts man without fixing it,

Well, it did not work and this is a gear-driven one that brings new words to your vocabulary. And the regulator did look brand new.

Anyway, to make a long story short we had two causes of trouble. The generator was one, but the generator fuse was the other. By all looks, it was okay But to double check we put a new one in and, lo and behold, it worked.

The old fuse, while it looked good and we couldn't pull it apart, was the culprit. It was intermittent when we checked with a voltmeter in the circuit, so we twisted the ends a little bit and it came apart.

The trouble was just sitting there waiting.

The fuse was halfway making contact and was experiencing a little corrosion. "For the want of a nail--."

If Ralph Patrick of Tehachapi, California cannot get 80187 fuel then DO NOT put in 100LL, but get an STC for auto-gas. The FAA in all its wisdom may not indicate this route but their answer is to throw money at the problem - like get an overhaul more often, change plugs when the lead gets too overflowing. 100LL is pure poison for the older (and more numerous) engines.

Accessible Rear Bulkhead Panel

by August S. Raber

I purchased a Piper Cherokee 140-1967 in April of this year.

I wanted to verify the state of the ELT battery so I proceeded to unscrew the sloping back panel in the plane. (I don't have a hat rack).

After taking out numerous screws I tried to pull out the panel. The sides crumbled and split. By the time I managed to get this huge piece through the cockpit and out the door it bent in two in several places. A complete disaster.

At home I took off the plastic cover and cut a new panel from a sheet of heavy duty fiber board (cost $7.00).

1 glued a four-inch strip of the fiber board at the center (back side) of the new panel, cut the panel in half and bolted on a long piano hinge at the cut mark to allow the top half to fold forward.

At the top I installed two pull tabs, glued the old plastic cover to the new panel at the back edges and applied a wide colored stick-on tape lapping over the front and back edges to cover the old screw holes in the plastic cover.

I folded the panel in half put the bottom half in the existing flanges on the plane and pushed the folded top half in place. The entire installation went in smooth as glass.

With the pull tabs I can check on pulleys, cables & bird nesting materials by pulling down the top half I did not use any screws as the new panel fits snug and rests on the existing flanges.

Hot Heater Ducts

I own a Cherokee Cruiser. I bought the aircraft one winter, but as spring arrived I soon discovered that the cabin was always very hot, even though the cabin heat levers were in the full off position.

Eventually, after several rather uncomfortable flights, I discovered that the floor ducts were the source of the heat and were becoming extremely hot in flight (I could not touch them they were so hot!)

After landing, I examined the ducting and the heater valve box. The heater box is attached to the lower part of the fire wall in the engine compartment. It is easy to see how the valve functions if someone moves the cabin heat lever and you lie on your back below the aircraft and watch the mechanism.

There is a simple lever and actuator arrangement, which opens and closes a flap. Warm air from a shroud enclosing the engine exhaust muffler is carried to the heater box via a piece of SCAT ducting.

The valve is closed (i.e., no cabin heat) when the flap is flush against the back of the heater box (up against the fire wall), and the hot air is simply vented out into the air stream. On my Cherokee the flap did not fully close, allowing hot air into the cabin floor ducts.

Apparently at some point, the flap lever (an "L" shaped piece of steel) had broken or the hinge had worn, and someone had cut the lever short, drilled anew hole for the hinge, and reassembled the mechanism.

This shorter lever prevented the flap from fully closing by the actuator mechanism and allowed hot air continuously into the cabin. On the ground, it doesn't matter much since the heat output is related to the engine power. In the air, however, it doesn't take long (less than five minutes) to heat up the floor ducts 'til they are really hot.

It was a relatively simple job to remove the lever from apiece of steel stock that was about one inch longer, drill two holes and them reassemble the mechanism. Now the flap closes flush with the bulkhead, and the floor heater ducts are cool. What a difference in the cabin temperature!

Cherokee owners may want to check the heater box or the flap on their aircraft. If it doesn't fully close, this will give a problem with hot floor ducts and excessively warm cabin temperatures. Having examined a few other older Cherokees on our field, it appears that the lower hinge on the heater flap lever gradually wears thin with normal use, and eventually breaks.

Of course, it's very easy for a lazy owner or A&P to cut the lever short and drill a new hole for the hinge, but this will not allow the heater flap to close properly. On one Cherokee I examined at a local field, the heater flap was worn and had been safety-wired partly open. The continuous heating of the floor duct and the fuselage belly skin downstream of the heater box looked as though it had caused scorching of the paint and skin between the center stringers.

The only way to prevent these problems is to replace the damaged or broken lever in the beater box with one of equal length. This is a simple part to make if necessary.

Regular lubrication of the hinge in the winter when cabin heat is used more frequently or a simple bushing in the hinge will also go a long way to preventing the problem from occurring in the first place.

(Name Withheld)
Beltsville, MD

Wants Fuel Gauge

Cecil Blum, of Denison, Iowa, asked about a fuel gauge for his 1965 Cherokee 180. His answer:

Unfortunately, the fuel gauges for your plane are not being manufactured new. Your only two choices are to try a salvage yard - Wentworth is probably your best bet. Or you can try to have yours rebuilt. Airparts of Lockhaven (800) 443-3117 specializes in this type of repair.

Radio Static Problem

Dean Thompson, of Sandpoint, Idaho, asked about radio filters to eliminate magneto noise. His answer:

All filters basically boil down to a simple capacitor which is designed to short out the radio frequency interference. It does not matter much whether your filter is a factory installation or an after market unit, but placement of leads and connections may be critical so it is agood idea to confer with a qualified avionics technician to get the best advice. Two installations which appear identical may have just enough difference in the routing of wiring to make all the difference in the world.

Brake Bleeding For Cherokees

by Steven Wolf

The previous owner of my plane was a mechanical engineer and he devised a simple way for one person to bleed Cherokee brakes in about 15 minutes. Glad all his schooling wasn't wasted.

You get two LONG pieces of 3/16" inside diameter clear plastic flexible tubing and put one end of each in the brake reservoir (left side front of the fire wall). The other ends fit over the brake bleeding valve fitting at the wheels.

Of course you have to loosen the brake bleeding valve fittings, and then you pump the brake (hand brake also) and the fluid circulates through the system. You can watch the air pockets circulate through and out, for you drape the tubing over the windshield where you have a good view of it as you pump away.

That's it. Make sure your reservoir is full at the start, for the tubing will steal a small amount, which you drain back into a can when you're done. And of course don't forget to close the brake bleed valves at the wheels before taking off the tubing.

Constant Speed Prop, Fuel Pump Problem

N7531W is a 1963 180 that had a constant-speed prop put on in 78 in addition to some other things. How do you estimate power output of such a beast? The rpm niaxes out at 2500+ no matter what.

I suppose the drop in manifold pressure is meaningful but I am not sure. The main reason for my concern is I feel the rate of climb is about 213 of any way I calculate it should be. Since I like the high, hot country in the southwest... The difference between 200 and 300 fpm is a lot when the ground is close. As best 1 can tell, a 10% power loss would do that.

One other problem has my FBO baffled. The me-

chanical pump has been checked for pressure output and seems OK as far as volume goes. That is it handles takeoffs when I have forgotten to turn on the electrical.

But just as the electrical is turned off there is a temporary pressure drop that has always bothered me.

Then coming back from Carson ity, at 10,500 over lake Talioe, I turned off the electrical and the engine quit.

Turning it back on restored power so quickly that it might have come back by itself in any case. Turned it off again when out of the mountains. The pressure quickly dropped to 0, remained there a few seconds, aid slowly climbed to about 5. No hesitation in the engine that time or any other. The pumps are in parallel

Donald W. Wood
Pinole, CA 94564

Dear Donald,

One of tlie problems of making some changes, including a different engine or propeller, is that the book figures for calculating power output no longer work. Yes, the manifold pressure gauge is now the main power setting gauge, but getting accurate readings may be difficult.

I suggest you start with an owners manual for an Arrow 180. Use the power setting charts there to give you an indication as to your power settings. Then, do a cross check. Clieck gallons of fuel used per hour to confirm whether you have the proper setting (75 percent power, for example, should equate to 9.4 gallons per hour with a constant-speed or fixed-pitch prop.)

Your engine-driven fuel pump needs work, either on the pump itself: or on some facet of installation. It is not normal to get apower drop offwheo switching offtlieelectric pump. That power drop means either your pump is loafing along or it is getting vapor lock while the electric pump is operating.

Perhaps you are leaving the electrical pump on too long. Tlie book says turn it off when you reach a safe altitude (1,000 feet agl). You should save the electrical pump for an emergency when it really will be needed.

Wants More Power In His 140

Tom Steele. of Spring, Texas, asked about converting his 1975 Cherokee 140 with a 0-320-E3D engine to 160 liorsepower His answer

I am sorry to report that altliougli some 0-320 engines can be converted to 160 horsepower, your engine is one which cannot. The following list of engines have thin main bearings and narrow deck cylinder flanges and cannot be fitted with the higher compression pistons and other modifications to get the higher power rating: A2D, E2D, E2G, E2H, E3D, E3H, IO-320-E2B and AEIO-320-E2B.

The major improvement which results from using a "hotter" engine is rate of climb. As you stated, the results would be very similar to the performance of a normal PA-28-160, but no increase in useful load would result - the same weight-and-balance calculations would be used after the conversion.

Warrior II Bits 'N Pieces

by David Tornbom

I just spend some time inside our 1977 Wanior II, working on the electrical system. Here is some information other Warrior II owners might be interested in.

If you hold down the reset switch in the ELT control too long you can pop a circuit breaker.

Where the nose cowling bolts together just behind the spinner backing plate on the right side, if the front screw is too long it will touch the starter ring and make a strange noise during shutdown.

Where do the large electrical cables go'?

Starting at the alternator output bolt (the big one) the cable goes across the front of the engine, back through the fire wall and connects to the amp meter. Another cable goes from the amp meter back across the instrument panel down the left side to the area under the rear seat and connects to a large diode under a dome shaped piece of plastic on the left side of the control cables.

A cable goes from the top of the diode to the battery master relay and another cable from the relay to tlie battery. The diode prevents 12 volts from going to the alternator when the alteniator switcli is turned on.

A larger cable starts at the battery master relay, across to the left side, forward through the fire wall and connects to the starter relayisolenoid which is just above the electrical fuel pump. From the starter solenoid the heavier cable goes forward to the starter.

A cable runs from the starter solenoid back through the fire wall across the panel to the breaker panel buss bar.

One more cable is bolted to tlie engine, through the same hole in the fire wall and bolted to the airframe near tlie voltage regulator. Tlie voltage regulator red wire goes to the overvoltage regulator and the yellow wire goes to the alternator.

ALT ---AMP---DIODE---BATTERY---STARTER---BUSS SOLENOID

Replacing Cherokee Side Windows

by Tim Brown

I have some suggestions on replacing tlie side windows in the Cherokee 140 based on a replacement I made a couple of weeks ago. The replacement of these side windows by tlie aircraft owner is allowed by the FAR's and it can represent a significant cost savings (a couple of hours of an A&P's time plus materials).

Here is a step-by-step procedure for the front passenger side window, so you may have to modify the procedure for tlie other windows:

1. Remove the metal molding pieces at the top and bottom of the window. It doesn't matter which one is re-

moved first. CAUTION: these metal molding pieces are thin aluminum so they can be easily bent and they can also cause some pretty nasty cuts.

NOTE: Be sure to keep up with the screws and washers. I put mine in the ash tray in the front passenger arm rest because 1 went to the airport without a zip-lock bag or container.

2. Remove the short (two or three-inch) piece of sheet metal at the rear of the window. This has to be done now in order to uncover the screws for the horseshoe-shaped window frame.

3. Remove the horseshoe-shaped window frame very carefully to keep it from bending. I found that it was best to remove all hut two screws at the front and back of the top of the frame and then loosen these screws. When you remove the final two screws be sure to hold the frame securely because it is so thin that it could bend or maybe even break.

Don't even think about a power screw driver - it could do too much dainage and won't fit unless yon have a 90 degree drive.

4. Carefully remove the old window and save it as a pattern for the new window. Remove any sealant or foam tape which stays on the door.

5. Take the old window to a glass shop which liaiidles plexiglass and have them cut a new window. Unless you own a glass shop you won't save enough to justify tlie headaches of cutting your own window. Besides if there are any mistakes made by the glass shop they shouldn't charge you for additional plexiglass panels.

Don't worry about the new window being flat because it will take the curvature of the door once it is installed.

6. 1 bought a roll of vinyl foam tape at the local automotive parts store. The tape comes 10 feet to a package and I used 6 feet for the front passenger side window for my Cherokee 140C.

7. Peel enough of the kraft backing from the new window to allow sticking tlie vinyl tape around the perimeter of tlie window pane itself Leave the rest of the window covered by the paper to prevent scratching as you complete the installation.

8. Place the new window in the opening making sure that the vinyl tape bears against the metal part of the opening. At this point the Service Manual calls for putting the sealant around the window but I feel it is easier and a lot less messy to seal the window gaps after the metal foam and moldings are in place.

9. While holding the window securely in the door opening (or better have a second set of hands) install the horseshoe shaped window frame very carefully to keep from bending it.

Loosely install four screws, one in each corner of the frame. Start at the middle and install screws from front to back (as if you were sewing a piece of cloth) tightening each screw as you go. BE CAREFUL not to put any pressure against the window or you'll be buying another piece of plexiglass.

CAUTION: There are two sizes of screws so be careful not to try to screw the bigger screw into a hole sized for the smaller screw. If it's too hard or too easy to turn the screw it's probably the wrong size. The marks made by the cup washer can be used to determine the proper size of screw to use.

10. Now go back and install the screws along the bottom of the horseshoe shaped window frame. If done right, each screw should line up pretty well.

11. With the horseshoe-shaped window frame installed it's a simple matter to install the top, bottom and rear molding pieces. Yes, you'll have to remove a few of the screws where the moldings overlap the horseshoe-shaped window frame but at least all of the holes will line up with the screw holes.

12. Place sealant (I prefer the flowable silicone stuff used for sealing car windows because it will flow into any nook and crannies and keep out rain water) to the edge of the window and frame on the outside and inside (reduces wind noise somewhat).

It may be better to test fly the new window before the sealant is applied in case you've forgotten something or done something wrong which would require removing the window again.

My costs were $23.00 for the new window and $5.00 for the tape and sealant plus about three hours labor and parts scavenging. I figure I saved abut $100 in labor and $20 in parts markup costs.

For my savings I can buy enough 100LL to fly for eight or ten hours which will probably give the FBO a better profit margin without his having to invest much human labor, so both of you will be happy.

An additional word of caution. Wlien you install a cover or anything else DON'T push against the window. This is bow I cracked my window. If your windshield needs replacing you're out of luck. The FAR's allow only licensed A&P's to install windshields.

Winslow Oil Filter

by Walter Johnson

This letter is in response to previous comments concerning Winslow oil filter eiement problems. Either Baldwin Manufacturing Company Filter #JC-405 or Wix #51011 will fit the system in question.

A word of advice from one who had a bad experience with the Winslow - invest the money to install an adapter for a screw on filter.

I experiencedan in-flight engine failure in July 1992 when the top of the Winslow filter on N8764W, my 1964 Model 235, partially lifted from the canister allowing all the oil to exit down and under the plane with not a drop onto the windshield.

This event occurred after take off from a grass runaway where some abnormal vibrations were present, however, not severe enough to have caused damage.

Cherokee Wheel Alignment

by Terry Lee Rogers

Just about everyone knows that when their automobile tires start wearing rapidly it is time for a wheel alignment. But many pilots are not aware that wheel alignment is important in airplanes, too.

Of course, you do not typically taxi for miles on end in an airplane, so alignment is not as critical as in an automobile. Or is it?

One member recently complained that, following an oleostrut rebuild by his mechanic, the airplane tended to taxi in circles. The only way to get the aircraft to travel in a straight line was to apply considerable rudder pressure.

The problem developed when the mechanic reassembled the oleo. He put the washers in the scissor assembly back in "according to tlie book" rather than the way they came out of the plane. Unfortunately, the book does not take into account the particular alignment specifications of an individual aircraft.

And this scenario is the one which results in the majority of out-of-alignment Cherokees. Those washers in the scissor assembly are tlie adjustment for wheel alignment

Luckily, wheel alignment on Cherokees is not too difficult Let's cover the procedure

Nose Wheel

The first item of alignment involves the nose wheel. The nose wlieel is aligned to insure that the wheel is pointed forward when the rudder pedals are in the neutral position. The alignment procedure is specified in the aircraft service manual.

The procedure is as follows (consult your service manual for variations for your particular plane):

1. Place tlie airplane on a smooth level floor that will accoinmodate the striking of a chalk line.

2. Level the airplane.

3. From tlie center of the tail skid extend a plumb bob and mark the contact point on the floor.

3. Extend a chalk line from the mark on the floor below the tail skid to a point approximately three feet forward of the nose wlieel. Allow the line to pass under the wheel at the center line of the tire. Snap the chalk line.

4. Clamp the rudder pedals together in a neutral position.

5. Adjust the rod end bearings of each steering control rod to align the nose wheel with the chalk line and to bring the rudder pedals into neutral angle fore and aft. To align tlie nose wheel straight forward, stand in front of the nose gear and align the center rib of the tire with the chalk line or lay a straight edge along the side of the tire and parallel the straight edge with tlie chalk line.

Check that rod ends have sufficientthread engagement by ascertaining that a wire will not go through the check hold in the rod (For rods without check holes, maintain a minimum of three-eights of an inch thread engagement.)

The service manual has additional instructions and provides a table of nose gear alignment tolerance, but you get the idea. You are simply insuring that the nosewheel is pointed forward when you have neutral rudder. Main landing gear.

Main Landing Gear

Alignment of the main landing gear is not covered in all manuals However, the procedure used with the Arrow should suffice for all models It is given below

1 Place a straightedge, no less than 12 teet long, across the front of both main landing gear wheels. Butt the straightedge against the tire at the hub level of the landing gear wheels. Jack the airplane up just high enough to obtain a six and one-half inch dimension between tlie center line of the strut piston and the center line of the center pivot bolt of the gear torque links. Devise a support to hold tlie straightedge in this position.

2. Set a square against the straightedge and check to see if its outstanding leg bears on the front and rear side of the brake disc. (It may be necessary to remove the brake assembly to gain clear access to the disc. If it touches both forwardand rear flange, the landing gear is correctly aligned. The toe-in for the main landing gear wheels is 0 +-1/2 degree. Piper recommends a carpenter's square for this purpose because of its especially long legs.

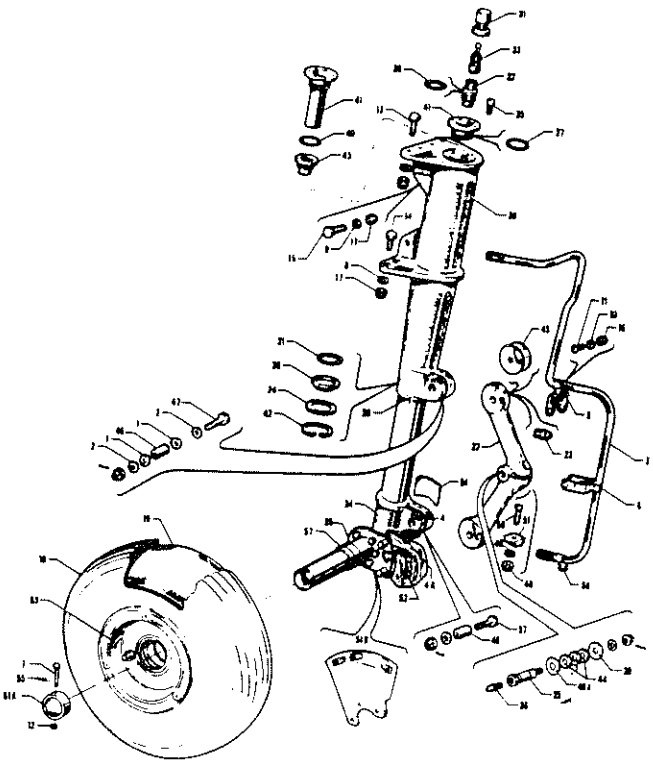

Main Gear Installation (140)

3. If the square contacts the rear side of the disc, leaving a gap between it and the front flange, the wheel is toed out. If a gap appears at the rear flange, the wheel is toed in.

4. To rectify the toe-in or toe-out condition, remove the bolt connecting the upper and lower torque links and remove or add spacer washers to move the wheel in the desired direction.

5. Should a condition exist that all spacer washers have been removed and it is still necessary to move the wheel further in or out, then it will be necessary to turn the torque link assembly over. This will put the link connecting point on the opposite side allowing use of spacers to go in the same direction.

6. Recheck wheel alignment. If the alignment is correct, safety the castle nut with a cotter pin.

The Arrow manual then goes on to specify additional checks to insure that the squat switch adjustment is still correct.

As a rule of thumb, one AN 960-416 washer (.062 inches thick) is good for about half a degree of adjustment in or out. When adding or removing washers, you must add or subtract a corresponding number of washers at the end of the bolt to keep the "working length" the same.

Generally speaking, your plane probably came from the factory with one washer under the head of the bolt and three washers under the nut. If you add one washer to the joint, you must remember to delete one from the end. And remember, you are working for correct alignment - not to put the washers back in the same order shown in the manual.

You should not have to add or subtract more than three washers total. If this does not do the trick, it is time to flip the torque links over, as recommended by the service manual.

When you get approximately neutral alignment as shown by the square against the straightedge, you have aligned your main gear. For you automotive fans who are wondering, neither castor nor camber are adjustable on Cherokees.

With proper wheel alignment your plane will handle better and the tires will last longer. And if your alignment is good make sure it stays that way. If anyone has reason to disassemble an oleo strut, make sure that they note the position of the spacer washers and reinstall them in the same position from which they are removed.

Hot Running Lance Had Bad Gauge

by Owen Waggoner

A few months ago I wrote asking if anyone knew why my PA-32-RT always showed an oil overheat indication. I received letters from other Lance owners with the same problem, but no answers.

I also researched letters from past magazines and found that this has been a problem since the first Lance was produced.

I am writing now to announce that I have solved this problem (at least in my own plane.) I installed an Electronics International Ultimate Scanner and found that when the original oil temperature gauge shows 180 degrees the scanner also shows 180 degrees.

However, when the gauge indicates half way between 180 and 260 the scanner shows 190 degrees. When the gauge is at the red line the scanner shows 212 degrees.

I had the gauge inspected prior to the installation of the scanner and it checked out OK. So I believe the problem is that the gauge is reading the best it can, but the calibrations between 180 and 260 degrees are too small for the gauge to show correctly.

On cold days the gauge will read out of the red and on hot days it will read in the red. But now my problem is solved.

I have always wanted this engine scanner. Now I can really appreciate what it can do.

Without the digital accuracy on each cylinder's CHT, EGT and oil temperature, you are just guessing at how your engine is running. I do not want to guess when there is so much at stake. I want to know, and now I do.

Wants Information On Engine Conversion

My wife and I are the proud owners of N5790F, a 1969 Cherokee 140. We love our Piper, but we would really like to go a little faster and carry a little more useful load.

While going through the specs on early 180s and 140's I noticed that all dimensions (i.e., wing spar, length, height, etc.) were exactly the same. Only the horsepower seemed to set the two aircraft apart.

My questions are as follows:

Is the horsepower the only difference in these two aircraft? Are the airframes the same'! Is horsepower, alone, the only factor determining useful load? When a 180 horsepower conversion is installed in a Clierokee 140 why is the increase in useful load so minuscule'?

Tom Renner
Vincentown, NJ 08088

There are several differences between the 140 and 180, but for all practical purposes the two are identical except that one has a 0-320 engine rated at 140 horsepower. while the other has a 0-360 engine rated at 180 horsepower.

From this you would surmise that the gross weights of each would be the same if an engine were swapped providing tlie 140 with a 180 horse engine. But. of coarse, you would be wrong.

The gross weight is determined not by a paper exercise, but by actual testing during tlie STC process. The weight-and-balance envelope specified in a conversion is that determined to be safe by the FAA during the testing process. You would assume the plane can fly at the same weight as a 180, but legally you are limited to the weight-and-balance information developed during the STC process.

Nosewheel Shimmy Can Be Catastrophic

by John B. Meagher

In September, while trying to eke out tlie last 20 hours before TBO on the engine in N8284X our 1981 Dakotn (it is on a leaseback tor rental so TBO must be observed) my buddv and I landed at Allentown. It was so vio lent (he was flying) that his kneeboard was shaken down to his ankle!

I flew back to Caldwell and gently landed . avoid braking until well down tlie runway when tlie aircraft had slowed considerably. No shimmy.

A mechanic took the Dakota for a high-speed taxi and Wham! It happened again - this time damaging the engine mount and cracking the sheet metal on tlie rudder!

We had the engine removed for overhaul at that point and the engine mount sent out for examination. The firm which did tlie check said the mount WAS bent - perhaps from a hard landing. They straightened it and sent it back.

Two weeks later. Mattituck returned the engine, The boys in the hanger put 84X together and took it out for a high speed taxi. Wow! It happened again AGAIN DAMAGING THE ENGINE MOUNT!

I am told the guys in the tower watched, bug-eyed, while the event unfolded on the runway below.

Piper acknowledged the probletn has occurred in the past and recommended we replace the spring-loaded metal "bungees" that connect the rudder pedals with tlie nose wheel with solid rods.

That was done AFTER the second shimmy attack and it seems the problem is cured. We await the decision of the insurance company as to whether and how much it will pay toward the damage and repairs.

Problem With Shunted Ammeter

I have a 1979 Archer II. Some time ago I installed a new battery and when I flew up to my cabin. which is about a two hour flight. I noticed the load meter or amp meter indicated quite a bit of alternator output slowly coming down to a reading of maybe 10 amps.

I assume that this meant that tlre alternator was charging tlie battery up. However, that was the last time the alternator showed anything and since then it has not moved from the zero peg.

I took it into my mechanic and be removed the load meter or amp meter and told me that it was on a shunted ammeter system whereby it was really reading the loss of power from a cable that actually carried the main lead and that this newer system was designed to reduce the likelihood of a fire in the cabin.

We also tested the two leads to the load meter and on my mechanic's tester it indicated that it had continuity

I took the ammeter to a shop that specializes in auto electronics and the man there thought it worked. He showed me tliat while putting a load consisting of a light tester of 12 volts. that the needle came up to a reading of about 15 amps on the scale. I obtained another ammeter from a used pans supplier that appeared identical to my ammeter. Putting my little electrical tester on it indicated continuity and resistance of 0.2 ohms. We installed tliat ammeter into my aircraft and it also refuses to budge ti-om the zero peg.

My mechanic and I are both a little puzzled as to where to proceed at this point. My mechanic apparently thinks there is still something wrong witli the ammeter arid I think there is something wrong witli the wiring.

I read over the "know your charging system" articles published in August, but tliat does not speak to tlie ammeter problem. I wonder if you would be kind enough to give me some advice on troubleshooting the problem.

William J. Hennessy
St. Paul. MN 55101

I would say that your test of the ammeter as well as substitution of another unit fairly well eliminates the meter itself as tlie culprit.

The problem is in the wiring itself. The ammeter itself is simply a device designed to read a small current - nothing like 20 or 30 amps passes through that small instrument. As your mechanic said, it is a shunted system and the meter is connected in parallel with a wire of known resistance which handles the large amount of current - the reading on the ammeter merely reflects a small portion of the

total current flowing in the overall circuit.

However, a loose or broken wire, or anything which will introduce additional resistance into the amnieter circuit will cause the meter to indicate low or no current. Your problem almost certainly lies in this wiring.

Loose Wires Snag Control Column

by Bob Boriog

My partner experienced a potentially dangerous situation in our 1963 Cherokee 180. While practicing landings he pulled full aft yoke before touchdown. A good landing ensued and he advanced power for a touch and go. The yoke would not move forward so he aborted the takeoff. After wiggling it a few times while taxiing in he got it to go forward.

After shutdown we crawled under the instrument panel and found out that a couple of the wires behind the panel were not secured properly and had moved out toward the nose. The control yokes are connected behind the panel with a bolt and cotter key. One leg of the cotter key was not fully flattened against tlie rod. Tlie wires had caught on this cotter key.

If this happened in flight during a stall series, it would have been sporty to recover from the stall. Fellow Cherokee owners would be wise to look under their panels and check that all wiring is properly bundled and secured, A plastic cap over the nut and cotter key wouldn't be a bad idea either.

Slick 50 For Cherokees

Vance Smith, of Louisville, Kentucky, asked about using "Slick 50" in his Cherokee. His answer:

The question of "super oil additives" comes up regularly and the answer is the same. Why'?

Slick 50 was approved by tlie FAA for use in aircraft engines, but not by Lycoming. The FAA determined that using the additive did not harm tlie engine - it certainly never endorsed any claims that the gook did any good,

Since Henry Ford started mass production of automobiles, someone has been marketing a secret formula additive for oil guaranteed to provide a "tune up in a can." Generally, these super additives do no good except for tlie wallets of their promoters. Proper maintenance is tlie way to go for engine longevity, not Slick 50.

Isham Has Lance Wing-Tips

Isham Aircraft has obtained FAA approval for installation of a new-style wing tip with Whelen recognition lights on all Piper Lance models. The company claims the installation improves flight characteristics and provides safety benefits.

Tlie wing tips add a few inches of lifting surface to the Lance's wing, providing a slight climb and cruise increase, according to Isham.

Whelen recognition lights are mounted in each wing tip making the airplane easier for other pilots to spot. The lights draniatically improve night landing and ground operations and provide a back up system to the factory cowl mounted single landing light, according to Isham.

The tips are not available for the Cherokee Six with fuel tanks in the wing tips.

A set of wing tips with lights is $1,885. Additional information may be obtained from Globe Fiberglass, Inc., 4033 Holden Road, Lakeland, FL 33811 (800) 899-2707.

Wants Curtain Hardware

Mike Finnegan, of Port Charlone, Florida, asked about purchasing curtain hardware for his 1973 Challenger as well as an Autoflite II autopilot. His answer:

Piper makes the hardware for side curtain installation. The Warrior parts catalog lists both curtains and the rod assembly. The rod, itself, is 67969-15 and the three brackets are 67969-02, -03, and -04. Twelve each screws and nuts complete the installation.

You might also try salvage yards, such as Wentworth, to try to locate the hardware.

As to the autopilot, used autopilots are available from salvage yards or from sources listed in Trade-a-Plane, but I do not recommend the used alternative - there is no way to be sure of what you are getting. A new unit, with warranty, is worth the additional cost by far.

Wants Glide Info For His 180

Ricky Griggs, of Cheraw, South Carolina, asked about glide information for his Cherokee 180 The answer:

Unfortunately, Piper owner manuals are not necessarily chock full of information. Sometimes you have to really search for what you need and sometimes the manuals simply do not give you much to work with. Such is the case with glide information.

Both Cessna and Grumman give you nice charts which show glide distances from various altitudes. Now that I think of it, the charts these manuals give are amazingly similar...even the data is nearly the same.

Nonetheless, such information is simply not available for Pipers. So...I decided on a little empirical work of my own. It is easy to create a chart yourself when you know the rate of descent at the target airspeed.

Both the Grumman AA-5 and the Cessna 182 use 80 miles per hour as tlie best rate of glide speed. Piper manuals simply specify "do not let speed drop below 80 mph." It turns out that the Grumman best rate of climb speed is 91 mph, the 182 is 88 mph, while the Cherokee 180 is 85 mph. Therefore, I felt pretty certain that 80 miles per hour is pretty close to the correct best glide speed for the 180, as well.

Now you may differ with this. Empirical testing

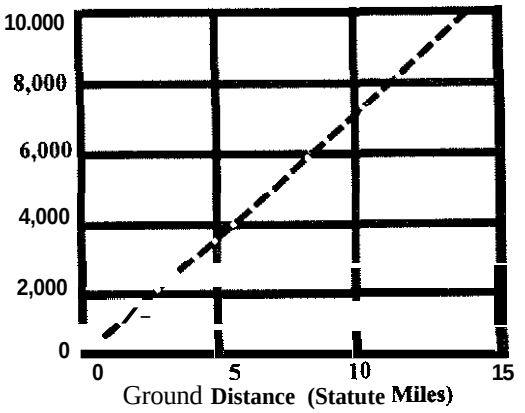

may show that the best speed should really be 78 mph or perhaps 81 mph. But can you really hold such close tolerances in an emergency? I have my doubts as to whether I could. So 80 mph it was.

Both the Cessna and Grumman manuals specify the charts were for a glide at 80 mph with propeller windmilling and with no-wind conditions. And this is the type of test I decided t o m .

I timed the descent two ways: with power reduced to idle, and with the engine moribund because of a full-lean mixture. Wit11 the engine at idle the rate of descent was 833 feet per minute at 80 mph. With the engine completely dead (as would be the case with a completely failed engine) the rate of descent was 952 feet per minute, significantly higher than mere idle.

So, using the 952 feet per minute rate, I created the chart shown. It should be pretty accurate for Cherokee 180s (and probably 140-160 models. as well). The Arrows, with gear up, would glide longer, but not if the automatic gear system decided to put down the feet early.

Oleo Strut Lubricant Stocked

As I was reading the Piper Owner's Magazine I came across a request for information on a lubricant used to protect the exposed oleo struts on his Cherokee.

Since we are in the aircraft maintenance business we see quite a few of the strut seals weeping because of the dirt that adheres to the struts after cleaning. Piper's recommendations to use a "fluorocarbon release agent dry lubricant" as a surface protection is good advice. We use it on all of the aircraft we maintain.

Tlie dry lubricant can he obtained in aerosol cans through us at the Worcester Municipal Airport, in Worcester, Massachusetts, (phone 508-755-1872), or through the manufacturer, Miller-Stephenson Chemical Company in Danbury, Connecticut (phone 203-743-4447).

Piper Specification number is MS122 and can be ordered through either facility under that number.

Robert J. Booth, IA
Piper Service Center
P.O. Box 258
Stow, MA 01775

Big Problems With Piper A/C

We have a 1975 Piper Archer (PA-28-180) with the factory air conditioning (PiperAir) installed.

Over the past year we have been having problems with the alternator belt twisting and destroying itself only two to five hours after installation As you know, the alternator belt is a very thin belt on the front pulley, and the air conditioning belt is the thick one in the back..

We have been to three FBO's and have replaced the following:

The belts (we are up to eight belts in the past year - only 50 hours of total use!)
The alternator pulley
The alternator
The alternator bracket was cracked - it was welded and is now secure.
The idler pulley and bearing

The main pulley around the prop appears to be in good condition.

I have tried to call Gates, the manufacturer of the belt, to see if there is a manufacturing defect, but haven't had success getting through.

This same problem happened to us tluee years ago, hut it only took us four belts to somehow get the problem solved.

We have spent over $1000 in the past year replacing the belts, and we still have very little confidence that we won't throw (twist) another belt.

We are entertaining having the air conditioning removed, which will require considerable expense and sign off by the FSDO. We would like to keep the air conditioning for those hot summers, but alternator operation is much more important than a/c.

We are at the end of our patience (and pocketbook)!

Does anybody else have this problem'? What do you suggest we do?

Gary M. Wieboldt
Bowie, MD 20720-4861

The longevity of alternator belts in air conditioned planes has been a problem. So much so, in fact, that Piper issued service letter number 903

The letter specifiesamethodofchecking belt alignment which Piper considers extremely important with this belt setup, In addition, the dimensions of tlie belt need to be checked before installation to insure proper size. The critical dimensions are given in the service letter.

Once the alignment is found to be o-k, belt tension must be adjusted to 90 to 100 pounds for a new belt with a minimum of 70 pounds after wear-111. Piper recommends checking belt tension every 100 hours or at each annual.

Alternator belt breakage on air conditioned models has caused many owners to scrap the air conditioning system. This is one potential cure, but it can be expensive - in addition to the labor of removal and getting the GADO approval you will need to spring for a new alternator.

Anyone with an air conditioned PA-28 or PA-32 aircraft should obtain a copy of service letter 903 and follow its recommendations.

Temperature Gauge Problem Unresolved

I have owned a 1970 180 for nearly four years and I have one problem I cannot seem to resolve. The oil temperature gauge always registers cold, heat shield on or off.

The oil pressure gauge indicates oil pressure OK, but even on hot days the temperature gauge needle never indicates in the green before takeoff, and just barely in the green after a long cruise.

I have had mechanics tell me there is nothing wrong with the instrument and that I am lucky to have such a cool running engine.

Have you or any other CPA members experienced this problem and, if so, how was it resolved?

Alex H. Chambers
Bethesda, MD 20017

One thing all Cherokees have in common is an air-cooled engine which will nearly always be able to bring a properly functioning temperature gauge into the green during cruise. There is no such thing as an engine which dissipates heat so perfectly that the oil temperature will not rise.

So, realizing that your temperature is running most of the time in the so-called green arc, it is obvious that either your temperature gauge or the sending unit is defective. This may require a bit of work, but the gauge and sender should be checked out and repairs made so that you will be aware of any conditions which DO result in abnormally high temperatures.

Lance Has Rough Idle

I have a Piper Lance which, after flight and during warm weather, does not idle well. It hunts and then eventually dies at 1,000 rpm if the fuel pump is not turned on. Any thoughts?

Steve Richard
Pleasanton, CA 94566

The Engine Troubleshooting Guide (Light Plane Maintenance, pub.), lists fourteen potential causes of poor idling, many of which fall into two major areas: high fuel pressure and over-rich mixture, or, conversely, low fuel pressure and over-lean mixture.

Obviously, your plane is suffering from the latter condition, as evidenced by the improvement when using the fuel boost pump.

Items to check include idle mixture adjustment, plugged nozzles, induction air leaks, and defective engine fuel pump.

However, before you spend too much money on these items, be aware that this is not an uncommon problem and it may simply be caused by too much heat in the engine compartment causing fuel to boil in the lines (a vapor-lock type of condition.) The only suggested cure here is to keep ground operations to a minimum and use the boost pump as necessary.

Wants to Convert to Fuel Injection

I have a 1972 Cherokee 180G. The 0-360-A4A engine in it has 2,450 hours since new.

As it is going to need an overhaul soon, I was wondering what the possibility and economics would be of converting this engine to fuel injection, adding turbocharging and a constant-speed prop.

If any of these mods are legal, what effect would they have on the performance of the airplane?

If you can point me to any manufacturer which has STCs for any of these mods, I would appreciate it.

Larry D. Dixon
Hurricane, WV 25526

A turbocharged, fuel-injected 180 with constant-speed propeller would, indeed, be quite a performer. It would not only get off faster during the takeoff run, but it would climb faster and, with the turbocharger, would be able to climb to amazing heights.

Unfortunately, so would the bill you eventually received in making these conversions.

It is possible to add a constant-speed propeller. The STC holder is Pacific Propeller, P O Box 1187, Kent, WA 98032 (800) 722-7767. They hold STC number SA-2213WE for installing a Hartzell propeller. You purchase the STC and all related parts from Pacific to make the conversion.

This conversion is pricey, but at least it is reasonably possible,

Recommends Shoulder Harness Kits

by Donald C. Renner

The January issue of Light Plane Maintenance has a really good article about installing front seat shoulder harnesses in Cherokees.

I had that done to my Cherokee 140 back in 1989 and while the price seems high - around $900 - the amount of work involved accounts for it.

Back then the Piper 764-981 kit cost $369.50 and the labor was $532. Add a few screws and washers and the sales tax and the total bill came to $930.90.

That is a good investment, especially if having your face pounded into jelly would be the alternative.

Maintenance dollars sitting in a bank account are of no value when they are digging you out of the trees.

Pitot Repair; Yoke Refinishing

A pitot heater does no good when the elements burn out, and unfortunately. even a rebuilt pitot head runs about $100 (ouch).

For those wanting to save some money, Airparts of Lock Haven offers a kit which replaces both heater elements. It is stock number ACC 110 and lists for $127.00. For more information contact Airparts of Lock Haven at (800) 772-3117.

And for those looking for another source of control yoke refinishing, you might try Sacramento Sky Ranch. They advertise a restoration service which might help those with unsightly control yokes.

For more information contact Sacramento Sky Ranch, 6622 Freemont Blvd., Sacramento, CA 95822 or call at (800) 648-5410. (916) 421 7672.

One A/C Belt Solution

by Dan Zastrow

Concerning the alternator belt problem in air conditioned PA-28s. I had the same problem with my Arrow. The belt twisted, frayed and often broke within n very few hours after installation.

Tlie engine was NOT installed by my regular A&P IA and the shop that installed tlie engine told me that "this is a normal Piper problem and there is no tix for it."

Tlie difference was that my problem occurred after the engine was reinstalled from overhaul. Prior to overhaul the belt had lasted several years.

My A&P IA (Clare Patterson of Conklin, Michigan) solution was to:

1. Remove the cowl.

2. Remove all the lower spark plugs and, for safety. the plug lends on tlie top plugs.

3. Adjust the alternator (forward/aft and tilt) so that the belt ran true.

With the plugs out we could spin tlie prop easily and check alignment. If it is out of alignment it will twist during the hand spin. After a couple of hours of continuing careful adjustments and spin checking, the belt stopped twisting and ran true.

I have had that belt on now for two years with no problems.

Paint Touch Up; Beacon Replacement

I am the happy new owner of a 1979 Piper Warrior. I read every issue of the Piper Owners' Magazine that I could get my hands on prior to purchasing the plane and then I subscribed myself. I am learning lots about being an aircraft owner and there is lots to learn.

I am especially interested in any hints and tips regarding exterior surface corrosion. The plane was inspected prior to purchase and it revealed some small bubbles under the paint. These spots were only located under the nose directly in line with the exhaust pipes.

Can these spots be sanded out and repainted without tlie whole cowl being repainted'! Is the technique for aluminum the same as for iron or steel (sand, brush and repaint'!) Is there a primer or clearer required' I would appreciate any ideas.

Tlie inspection also revealed an inoperative rotating beacon. I noticed that several advertisers in POM offer replacement strobes as well as new fairings. The aircraft on the cover of the December issue shows a strobe with a two color lens. Possibly you know of other outlets for similar replacement beacons'!

As you can imagine. I have been getting lots of advice from all the other pilots and owners that come by my hangar. It is sometimes hard to sort out all the suggestions. I appreciate the magazine and look forward to each issue.

Scott G. Klusmann
West Linn, OR 97068

Painting an aircraft is similar in most respects to painting an aotomobile. To get the official word, I posed the question to Bill Henshaw, of Randolph Products.

If your paint is original or the original color, matching is fairly easy. Randolph Products supplied the paint to Piper up until 1984 and the company can match all Piper colors either in liquid form or in aerosol cans.

The first step involves cleaning the area - any good solvent should do the job.

Then you will want to scuff sand the area. You can then wire brush the work, but remember to avoid a steel wire brush - use either an aluminum brush or use a Scotchbrite pad. The use of a steel wire brush simply invites dissimilar metal corrosion.

Once the area is sanded. you will need a very light coat of chromate primer. The coat should be thin enough so you can just about see the metal below. It provides proper adhesion.

Then finish it with the paint. And remember the rule: you can paint with enamel over lacquer, but never paint with lacquer over enamel. Randolph enamel is what was originally used by Piper.

As to your question concerning strobe lights, there are a nuniber of good sources of replacement strobes, some of which simply mount in tlie same location as the original rotating beacon. One of the biggest manufacturers is Whelan Engineering Co. (Three Winter Ave.. Deep River, CT 06417 (203)526-9504).They can provide you with details on what they have available.

Preflighting Control Surfaces

by Terry Lee Rogers

You know all about preflighting your plane. You do it before every flight, just as you were taught. But how tnuch attention to you pay to those control surfaces on your

plane'? And do you really know what to look for to spot a dangerous condition'?

Every pilot is aware of the importance of control surfaces and knows the havoc which would result if a control cable or piece of hardware fails during flight. Few, however, have spent much time studying their control systems or inspecting them for wear.

Unfortunately, control cables are difficult to inspect thoroughly. Nonetheless, prudence requires that you remove inspection plates every now and then aid check things to make sure they are operating properly.

So what should you be looking for when you preflight your aircraft?

First of all, check the control surfaces themselves for damage. Look for dings or anything broken on the ailerons, flaps, rudder, and stabilator.

Damage to control surfaces or to their stops often occurs because of wind. Most Cherokees come from the factory ill-prepared to handle the effects of wind. Most utilize a safety belt or other makeshift device instead of a proper gust lock.

Wind blowing from behind a Cherokee can still bang tlie control surfaces up against their stops and cause damage.

Even those planes with control column locks are not foolproof. Slop in control cables may still permit control surfaces to bang up against their stops. This is one reason why hangaring a plane may contribute to both longevity and safety.

Many pilots prefer an external gust lock for control surfaces - a piece of plywood and C-clamps for the rudder, for example.

This will not help much with the stabilator used on the Cherokee tail - there is simply nothing to clamp onto. The best solution is one of the aftermarket locks (such as offered by Dennis Ashby Co.. P O Box 1584, Upland, CA 91785) or a bungee system to tie the control wheels together.

The controls need to be checked before every flight. You may have just recently flown tliat plane, but it is possible for a fuel truck to have dinged an aileron or stabilator while you were inside the terminal getting coffee,

Obviously, check all surfaces (except rudder) for movement.

Check the rod ends. Although often neglected by both pilots and mechanics, the tie rod ends are a frequent trouble spot on general aviation platies. These rod ends connect the aileron to the bellcrank and, in Cherokees, also connect the flaps to the flap rod.

These rod ends contain bearings which permit the rod to move freely in more than one direction. However, proper movement requires that both rod end bearings be free. You should be able to freely twist any aileron control rod hack and forth through 10 degrees or so of travel.

If these bearings are frozen, they will cause extra stress on hinges, brackets and the rods themselves. These stresses build up until something breaks. If it happens in the air, you have a major problem on your hands.

Carry a can of spray lubricant with you during preflight. Hit any hinge, pulley or bearings which are in obvious need of lubrication. But make sure you check the service manual for your plane. Some bearings are made of Teflon which should NOT be lubricated.

What type of lubricant should you use? Once again, check your maintenance manual for the final choice, but a lightweight oil such as 3-in-1 oil, LPS-2, SAE 5 or 10 should work well.

One place to pay particular attention is the trim actuator drum located in the tail behind that plastic cone beneath the rudder. This is a perennial problem in Cherokees.

Have a friend operate the trim in the cockpit while you check the cable as it reels onto the d m . If you note fraying (or have reason to suspect the cable is chafing), have your mechanic disassemble the unit and check further.

The trim tab on the stabilator should have not more than .15 inch of free play measured at the trailing edge of the tab. Adjustment is covered in the service manual. The trim tab should hit both its stops before tlie trim wheel hits its stops, according to the manual.

And although the drum in the trim system is a particular problem for Cherokees, any pulley in tlie control system has a potential for seizing up. Occasionally, remove as many access panels as you can and check any pulleys you can find. Make sure they turn freely.

If you spot a frozen pulley hit it with LPS-1 or 2 and attempt to free it by hand.

While doing any preflight inspection check the stabilator and aileron for loose counterweights (you may not be able to get to them, but be aware that they arc there and check for rattling or binding or any other obvious source of trouble.)

Cable tension is important and should be checked at least annually by your mechanic. This requires not only that access panels be removed, but the person doing the checking needs access to a special instrument called a cable tensiometer, something most pilots do not own.

A further area where Cherokees are known to have problems is in the flap handle area. A new bushing has been specified by Piper in Service Bulletin 965. The service bulletin resulted after numerous tlap handles were found to be worn to dangerous limits. The flap handles need to be inspected and the service bulletin should be complied with.

But you have your plane inspected every 100 hours or every year and all these things are checked at that time by your mechanic, right! Don't bet on it.

Some mechanics are more conscientious than others. Even tlie conscientious mechanics may miss something. For example, some pulley checks require one mechanic eyeball the pulley while another operates tlie cockpit controls. A thorough check will simply not get done in a situation where a mechanic is working on his own without help.

As the pilot, you are the person wlio has the ultimate responsibility to insure that the control system is oper-

ating properly And as pilot, you have alot at stake to make sure that the inspection you perfonn is as adequate and meaningful as possible

Trim Wheel & Hat Shelf

One of the Cherokees in our flying club is a 1968 180. The electric trim in the winter is very slow and sometimes sticks or slips. Even in wann weather, the trim wheel is very difficult to move manually even when the electric trim seems to be working perfectly.

Is there an adjustment to allow the wheel to move more freely manually? I am concerned that the electric trim would slip. The tail section has recently been lubricated and that didn't seetn to help. Is there another way to free up the stiffness without losing agood trip with the electric trim?

Also, I know there is an after tnarket hat shelf for the 140's. Is there also one for the 180 with the flat rear bulkhead'?

Kent Karr
St. Charles, IL 60175

Unfortunately, once the cable tension is correct and the proper amount and type of lubricant is applied, there is not much left to adjust, assuming that there are no other problems in the system. One member recently had his tail screw rebuilt - bad bearings were found - but even then the trim was nearly impossible to move.

This is a problem which seems to be much more prevalent during the winter months as the lubricant in the system tends to cake up due to the cold. But. as you point out. it can be a problem even in the summer.

From what I have been able to gather, there is not one single problem hut a variety which can cause the problem. The only suggestion I can offer is to troubleshoot the entire system including all pulleys and components (including those located nt the trim wheel).

As to the hat shelf bulkhead, it is unfortunate that none of the after market manufacturers have gotten approval for use in a 180. It is a natural - the same bulkliead could be used in 180 models. The only problem is that no one has done a proper weight-and-balance change calculation and gotten the requisite approval for installation from tlie FAA,

Wants Insight Into Prop Pitch

Jeff Cook, of Tampa, Florida. asked about whether he should have his propeller re-pitched on his Cherokee 140. The answer:

The propeller *furnished* by the factory is generally considered to be the best compromise overall in performance. It is called a "cruise" prop to distinguish it from a climb prop.

The 140 has a staidard pitch of 58 inches. This *means that* a plane would travel *forward* 58 inches for each complete revolution of the blade (assuming 100 percent efficiency) All the factory specifications (including power-setting charts) are based on this 58-inch pitch.

A 56-inch prop would be a climb prop. It allows the engine to turn over a bit more during takeoff aid climb and can steepen the climb angle slightly. It is useful for those who must operate out of very short strips, but it will also result in a loss of about four or five knots airspeed at top end.

Your plane, at 60 inches, is definitely set for cruise performance.

Re-pitching to 60 iuches will give a little more top end, but not as much as some people might think - the blade becomes more inefficient at the higher angle of attack and you do not get the percentage increase you might otherwise think. This is why, for most people. the standard pitch of 58 inches is probably the best compromise.

Any re-pitching should be done by a competent propeller shop and listen carefully to any advice they may offer. One problem with re-pitching - all your aircraft manual charts are then invalid and you are a test-pilot when it comes to creating them for your plane.

Leather Control Yoke Covers Available

Hand-crafted leather yoke covers with built-in posh-to-talk buttons. are now available for most aircraft

Prices are $150 each. or $120 for each yoke without a push-to-talk switch. They are easily installed by the aircraft owner with Velcro fasteners along the back.

For more information contact Warren Cregorie & Associates. (800) 634-0094 or (510) 420-5701.

Strange New Cure For A/C Belt Woes

by Donald E. Walker

I am the owner of a 1973 Cherokee 180 with air-conditioning which started eating alternator belts last fall. Each belt lasted two to six hours before twisting and self-destructing. I tried the same fixes others have. including replacement of all the pulleys.

The alternator was removed and bench tested and found to be OK. As far as we could tell the alignment was correct.

Early on it was apparent that the belts being supplied by Piper (P/N 568 851) were very tight when installed and, in fact, allowed for no adjustment of tension. These belts bore Gates P/N 7M 1030.

lo desperation we contacted Gates aid obtained a couple ofnon-aviation certified 7M 1030 belts. Sure enough, these were a good quarter inch longer than the ones supplied by Piper and, *when installed*, appeared to be tbe correct size. These belts should be readily available directly from Gates so long as you do not tell them it has anything to do with an airplane.

However, the crux of the problem turned out to be *something* else altogether During the investigation, I became aware that just prior to belt failure the ammeter showed

a rhythmic fluctuation at a rate of about two to three swings per second. Attaching a voltmeter to the main buss showed that during this behavior the alternator was rapidly being turned off and on.

On consulting my handy copy of Cherokee Hints and Tips, 1 ran across a comment that such ammeter swings were often caused by a defective master switch. I began to wonder if this could somehow be related to the belt problem.

My non-engineer's mind reasoned that if the alternator was being rapidly turned off and on while under load, rapid changes in belt tension and possibly some sort of harmonic vibration might result in twisting of the belt and subsequent failure.

Since we had tried everything else short of removing the air conditioner, I had my mechanic replace the master switch (He thought I was nuts!) Voila!, no more ammeter fluctuation, and the most recent alternator belt has now reached 15 hours with no sign of wear and tear.

I have no idea if the bad master really caused the belt problem or if the gremlins just decided to go home, but it is something to think about. I did bench test the old master and found that the alternator side was intennittent. On disassembly, the unit was full of dirt and the contacts were pretty well burned, so it needed to be replaced anyway.

Screwdriver For Adjusting Compass

by Don Spangler

Can't finda brass screwdriver for setting the compass? Get yourself about ten inches of brass welding rod, flatten the end with a hammer on an anvil, vise or any thick piece of steel. Then, use a file or bench grinder to square it up to make it look like a screwdriver tip. Then use your vise or vise grips to bend the other end into a triangle shape.

Wants to Update Instrument Panel

I am part owner of a 1963 Cherokee 180. Another partner and I would like to pursue our instrument rating so we have decided to add the necessary equipment to make 57W an IFR airplane.

We discovered substantial alterations to the existing panel would be required to add the second radio with ILS head, audio panel and ADF and we would still not have the standard "T" configuration for the flight instruments. Have you heard of anyone replacing the panel or panel and dash with one from a newer Cherokee'! Did it require an STC or was field approval sufficient?

I am familiar with the companies that manufacture custom panels. We thought this approach wouldallow us to replace the fuses with circuit breakers and use the mounting hardware for the radios. I would appreciate any advice you might have.

We plan to add pitot heat while we are at it. Could you send me information pertaining to the installation of the mast and wiring?

Tim Nilsson
Yreka, CA 96097

Instrument panel renovation is a topic which comes up frequently - especially where older model Cherokees are concerned. So I decided to get some tips from areal expert - Dennis Wolter of Air Mod.

Dennis has been involved in aircraft renovation for many years and has created afew really beautiful planes. He says that field approval via a 337 fonn is possible with the FAA - but the trick is to get the FAA representative involved BEFORE you start any work. Let them know in advance what you plan to do.

The big problem is cost. Dennis says it is possible to eat up 100 hours of shop time quickly when modifying panels. Your first step is to remove and discard the current panel and that plastic overlay. You will make a new panel out of aluminum and, although not an extremely difficult job, it involves skills that many A&P mechanics do not exercise well.

Fortunately, according to Wolter, the skills are usually available at many avionics shops. These people have experience in reworking panels and can probably give you a few ideas.

But, once again, it will cost. Dennis says to expect to spend between $3,000 and $4,000. The cost will belargely labor, but not entirely. For example, when you get into the panel you may find you want to replace marginal engine instrumentation. Those instruments were made by AC and are no longer available. Some may be re-buildable. but others will need to be replaced by more modern, more expensive replacements.

A more modern panel can make flying an older plane a lot more enjoyable, but before you start tearing into the panel, make sure you know what you are getting yourself into. Incidentally, Dennis can be reached at his shop, Air Mod, Inc., Hangar 3, Lunken Airport, Cincinnati, OH 45226 (513) 321-5576.

Reports On Electronic Tach

by Ray Greene

Here is some information on the Horizon P-1000 tachometer.

I have flown behind it now for 30 hours and I think it is great. It has some faults, but overall it cannot be beat

First of all, my mechanic says the instructions for installing it were so simple even I could do it. Second, run up is now a snap - no more guessing about RPM differences - it shows you in numbers. It also shows you what mag is off line. If you over-speed the engine a red light comes on. And by pushing a button you can see what your top RPM was on takeoff. Neat, huh?

Now the bad parts. In 30 degree weather it has a tendency to keep recycling until it warms up in about three

to five minutes with the engine running and cabin heat on. It takes about as long as it takes my loran to quit shivering and come on line. Kind of hard on a cold engine to guess at RPM when the tach is cycling from 688 to 1088.

The other problem isn't quite so bad -just takes getting used to. The fourth number in line - the "one" digit. seems to "flicker", meaning it will not be still. It is quite distracting at first, hut you get used to it.

Well, this is my report. I hope it helps anyone interested in this tach, I do not think you could buy a better one.

Ed. note: this tach is manufactured by Horizon Instruments, Inc., 556 S. State College Blvd., Fullerton, CA 92611 (714) 526-1919.

Resistor Value; Stubborn Screws

I am the owner of a PA-28-180, model C. I would like to obtain tlie resistance value and wattage rating of the navigation light dimming resistor. This is a fixed, wire-wound ceramic resistor.

In addition, I want to submit my technique for removing those troublesome wing tank screws. For the ones that would not back out, with reasonable torque I used an impact drive and tightened them slightly. Very slight tightening and very carefully, with impact blows. This proved 100 % successful for me with the stubboni screws.

Rill Schmauss
Sneads Ferry, NC 28460

Your question prompted me to go to the archives to try to
look up tliat resistor in an old parts manual. if it is the vertically mounted resistor on tlie lower panel located next to the starter switch, it is part number 484 407 and it is classified as a 7.5 ohm resistor of 10 watts.

Your tip on tightening hard-to-remove screws is a good one. Slight tightening tends to break the corrosive bond which holds the screw in place. The one caveat is, of course, not to damage the head by using too much force. Otherwise, you enter the realm of drilling into tlie heads and using the "easy out" method.

Strange New Source Of Ingested Water

by George A Durham Jr.

Last week we worked on the engine of a PA-28-140 including changing some hot and cold air ducts. The plane had been purchased with a "fresh annual."

The aircraft was then pushed outside with the nose pointed south to southeast. When the hard rains came, it blew right on the nose.

After the pilot ran the battery down, we discovered a lot of water - some on the plugs and in the cylinders, but none in the fuel system. We cleaned the plugs and blew out the cylinders. The engine started right away and then stopped - water again.

We foundtliat the carburetor heat valve was in such good condition and sealed so well that the rain which came in through the filter box was held forward of the carburetor heat valve. and starting the engine brought it right to the cylinders.

If the pilot had opened the carburetor heat valve first, before cranking the engine. the water would have drained out and not caused a problem. It is a new one on me, but it may help another pilot aid save him a lot of grief.

Carb Heat--Yes or No?

Daryl Weir, of Carbondale. Kansas, asked why Cessna and Piper had different recommendations in the use of carburetor heat. The answer:

First of all, Piper does not prohibit the use of carburetor heat. It is permissible and you, the pilot, need to make tlie final choice. The difference between the recommendations of Cessna and Piper result more from philosophical differences than from differences in hardware.

Cessoa reasons that because no one can be sure whether carburetor ice is forming, better to use it on every lauding. Piper reasons that good operating technique requires that the pilot be aware of engine performance and use carburetor heat only when necessary.

Is the Cessna recommendation safer'? Not when you consider that there is a downside to it. You should never have a problem with carburetor ice using tlie Cessna method, but there is always the problem of an unexpected go-around. Anyone who has ever tried climbing a 140 with carburetor heat on knows that this can be a real safety problem. As Piper is quite aware, in an emergency situation many pilots will not remember tlie carburetor beat is on - perhaps until it is too late.

One other problem - if a go-around is performed with carburetor heat on. detonation is quite possible which will certainly do your engine no good.

If you do decide to use carburetor heat during landing, use tlie same techniques as usual - do not try a power-on landing unless that is what you really want to do. And if you use carburetor heat, you need to remain aware of this should a go around be necessary.

Strange Pointing By ADF Radio

I have a 1971 Cherokee 180F. Since I bought it I removed the old switch box, Narco MK-16 and Escort 110. 1 installed a KMA-24 audio panel, dual KX-155s, a KN-64 DME & Flybuddy loran and I added only a half pound of weight!

1 did not replace the Narco ADF 31-A. This is my problem. Both before and after, the ADF always points 20 to 40 degrees east of the actual bearing within five miles of the station. I have had both the ADF and tlie antenna checked. Everything checked fine on the bench and 1 replaced the connecting cable. Still, I am 20 to40 degrees offwithin five miles of the station.

Does any other CPA member know how to fix what electronically is not broken?

Charles E. Truthan
Grand Rapids, MI 49546

Unfortunately, electronics installation is a science unto itselfaid only a good, qualified avionics technician is going to be able to get to the bottom of this. Not only must the equipment be working properly, but a good technician must be aware of possible interference witli other radios.

Another CPA member, for example, had an ADF which would give bizarre readings whenever one of the com radios was keyed, even with proper shielding and installation. The solution there involved running ADF wiring to the port side of the ship and tlie com radio wiring starboard.

Would Like to Fly Higher

I have a 1966 235B, N8616W. It is a good plane and I have owned it for 14 years. My only need is for more altitude capability for IFR tnps from the Willamette Valley to points east and south.

Generally I have to deal witli 10,000 to 14,000 foot MEAs. My questions are: (1) are there any turbo installations available for tlie 235? What is the procedure if no STCs are available'? Does Turbo Normalizer make one?

(2) I am looking at an engine soon. How much ceiling improvement would a 260 or 300 horsepower engine add and how about STCs for these?

Clayton Wood
Albany, OR 97321

As everyone who flies is aware, every airplane is a compromise. Some can carry big payloads, but at the cost of speed, while others are speed demons, but cramped and short on payload.

Unfortunately, when a plane does not meet tlie typical mission needs, it may be utieconomical to attempt to modify it so it does. In your case, it would probably be most economical to attempt to trade than to try to upgrade your plane.

I know of no one who offers a turbocharger for tlie 235. If one were available, it would not be cheap. A company which does offer such a modification for a Bonanza advertises a price tag of $32,000 for that conversion.

I know of no commercially available STC for a larger engine, either. A one-time approval for an engine swap would definitely not be cost-effective. The FAA requires the same testing that would have to be done for a production plane.

Propeller Spinner Safety Recommendation

It has come to the attention of FAA inspectors performing inspections on general aviation aircraft that many aircraft are operating with propeller spinners that have been repaired due to cracks or enlarged screw attachment holes. These repairs consist of welding or installation of patches and are not authorized by most manufacturers. In cases of enlarged attachment holes, many operators are installing "fender" washers (large OD with small ID) to cover up the enlarged hole.

This practice is not approved by most aircraft and propeller manufacturers because an out-of-balance condition may ultimately lead to disintegration of the spinner aid a serious compromise of safety. For the reasons previously given, the following manufacturers have issued their policy on propeller spinner repair:

Hartzell: No modification or repairs are to be made. This is to include "patches" and doublers of any type. The only known exception to this policy is repairs performed on PA-31 series aircraft propeller spinners by the holder of an STC located in Tucker, Georgia

McCauley There are no authorized repairs whatsoever.

Piper: There are no authorized repairs whatsoever.

Operators should bear in mind that any unauthorized repair renders the aircraft un-airworthy in accordance with the FARs.

Swinging your Compass Card

by D. C. Harris

This procedure was written to allow you to use the N-S and E-W adjusting screws in your aircraft compass to minimize the compass error caused by the magnetic influence of your aircraft and its electrical system.

If no outside forces (other magnetic fields) are acting on the compass and its N-S and E-W adjustments are correct, the compass card will always accurately point to magnetic north. If a compass is being influenced by the aircraft, or something in the aircraft, the amount of the deviation from magnetic north will change as tlie compass card remains stationary and the aircraft and its contents are rotated around tlie compass card.

This procedure uses the adjustments on your compass to compensate for the magnetic fields found in your aircraft. It is important, during this procedure, to have the aircraft systems operating as close as possible as in an aircraft cross-country flight (engine running, radio on, nav lights on, gyro spinning, etc.) Otherwise, all magnetic fields will not be compensated for.

This procedure simply adjusts your compass by turning the plane until the compass reads exactly North, South, East or West and then uses a sighting tool to rotate your aircraft exactly 180 degrees. If the compass reading does not change by exactly 180 degrees, the N-S and E-W adjusting screws are then used to adjust the reading to remove half of the indicated error.

Begin by constructing a sighting tool. I made my tool using a one-inch by one-inch by 60-inch piece of wood stock with 112-inch finishing nails protruding about two

inches from the wood stock at each end.

This tool is used outside of the aircraft in such a way that sighting over the tops of the finishing nails there is an unobstructed view of a distant object. The further away from the aircraft the distant object is located, the less parallax error will affect your adjustments.

You should use the sighting tool in a level attitude so the view will be much the same when you turn the aircraft 180 degrees and sight the same object from the opposite end of the tool. The sole function of the tool is to provide a way to accurately turn the aircraft 180 degrees. On my Cherokee 180, I placed the sighting tool on the top of the fuselage parallel to the wings. The tool could then be moved up or down the slope of the fuselage to make the tool height correct for sighting the distant object.

The sighting tool can actually be placed on any convenient place on the aircraft.

Move the aircraft into an area that will allow easy positioning in any direction and will allow easy turning 360 degrees and will allow running the engine without interfering with people or other airplanes.

Now, for those who are ready, here is the procedure:

N-S Adjustment

1. Start the engine and power up all tlie equipment you would normally use during flight.

2. Slowly position the aircraft so the compass indicates EXACTLY NORTH. Set the parking brake and recheck the compass reading. Shut down the engine. power off tlie electrical equipment (to conserve battery power and make it safe to exit the aircraft).

3. Exit the aircraft and place the sighting tool on tlie aircraft in some convenient location that allows you to sight a distant object. Tape tlle sighting tool to the aircraft securely with masking tape while keeping it level and aligned with the distant object.

4. Release the parking brake and turn the aircraft exactly 180 degrees as determined by viewing the distant object from the opposite end of the sighting tool. Set the parking brake.

5. Remove the sighting tool and place tlie tool and masking tape far enough away so they will not he disturbed when the engine is started.

6. Enter tlie aircraft, start the engine, power up all the equipment you would normally use during a flight, and note the compass reading. If the compass is indicating exactly south, proceed to the E-W adjustments in step 13.

7. Adjust the N-S adjustment screw until it reads half way between the present reading and South. It is important to adjust only one half the error out. After the adjustment, release the parking brake and slowly position the aircraft so the compass indicates exactly south, Set the parking brake and recheck the compass reading. Shut down the engine and power off the electrical equipment again.

8. Exit the aircraft and use the sighting tool as in step 3.

9. Once again, turn the aircraft, as in step 4.

10. Repeat step 5.

11. Repeat step 6.

12. Repeat step 7. Go hack to step 3 and continue the compass adjustment.

E-W Adjustment

East-West adjustment is accomplished exactly as was the north-south adjustment except you begin by slowly and carefully aligning the aircraft so the compass reads exactly East. Obviously, when you use tlie sighting tool to rotate the compass exactly 180 degrees, you are looking for an exact West reading.

Once again, repeat all adjustments only this time make them with the E-W screw.

Finally, you may need to repeat the entire procedure starting with step 3 on tlle N-S adjustment and continue through the E-W adjustments until no further adjustments are necessary. When no further adjustments are necessary you have completed the compass adjustments that insure that no errors exists because of magnetic influences within the aircraft.

Convinced User Of Vortex Generator

About a year ago I had discussions with most of the vendors of speed mods concerning the efficacy of vortex generators as a speed mod. The consensus of opinion was that vortex generators could not increase cruise speed because they would unavoidably add drag which would decrease cruise speed.

Everyone agreed that VGs could lower stall speeds, hut tliere was disagreement on cruise speeds. One man I spoke with was clearly irritated that such a misguided understanding should be attracting so much undeserved attention. Yet the few who were using VGs on their Cherokees were convinced their cruise speed was improved.

The controversy sparked my curiosity. In asking around for information I finally foundsomeone with an open mind AND considerable experience. He sent me about 50 pages of xeroxed material on Vortex Generators (VGs). Not "popular" stuff, these were research reports of wind tunnel experiments, including pictures of laminar flow, turbulent flow and discussions of factors contributing to each. I was fascinated.

Shortly thereafter, Art Matson introduced his VG kit. 1 was ready to spring for it, but he didn't offer it for my Cherokee Six. So, I decided to experiment on my own, based on what I had heard and read. The VGs I tried were similar to Art's in that I located them in the wing root area. I got about a five mph increase in IAS at cruise using 22 inches MP. I removed the VGs and the improvement disappeared. And, of course, the VGs located the stall speed also, by about five mph.

I tufted the wing root area on the pilot side so I

could observe what was going on. The tufts told me a lot.

It is very clear to me now that both sides of the original argument are correct: (1) VGs themselves are a source of drag which contributes to lower cruise speeds. and (2) VGs can, under certain circumstances, increase cruise speeds.

The reason why wing-root VGs can improve a Cherokee's cruise is apparently due to the considerable washout in the Hershey-Bar wing. Due to this washout, the wing-root area, even at cruise, has an excessively high angle-of-attack. The tufts showed a stall beginning in the wing-root area as early as 90 mph.

It is safe to assume that this wing-root has no laminar flow to worry about, so it is a good candidate for VGs. The high angle-of-attack and lack of laminar flow are already contributing to excessive drag in this area.

The VGs improve the lift, even during cruise, and this lets us lower the aircraft's attitude, which lowers the overall drag. The tufts confirm it: the stall is delayed until well below 90 with the VGs in place.

I did some deep stalls with and without the VGs; I was concerned that the VGs would compromise the Cherokee's legendary stall characteristics. They did not. They did slightly reduce my stall but'tet. Without the VGs, during a departure stall, the but'tet in my Six will shake your teeth out. With the VGs it isn't quite so violent, but there is still lots of warning, and still no wing drop.

So I am convinced. VGs in the Cherokee's wing-root are probably the closest thing to a free lunch as I have ever seen.

By lowering the stall speeds and consequent landing speeds there is a significant improvement in safety. In my opinion, Art Matsoo is to be commended for offering his kit. Art says he is now working on the STC for the Sixes. I want to be his first customer because I do not want to have to make my Six experimental in order to have the VG's advantages. Art Mattson can be reached at AMR&D, Inc., (815-338-7345.)

When To Use Winterization Plate

W. M. Conway, of Brownsville, Tennessee, asked when he should use the winterization plate on his Cherokee 140. The answer:

The oil winterization plate is not a red-line item, There is no specific temperature or flying condition when the plate must be installed and one at which it must be removed. You are kind of on your own in making the determination. In fact, from the number of letters we receive, there are a lot of Cherokee 140's out there with NO plates - they were lost years ago and the planes are being flown regularly with no winterization plate at all.

Generally, I recommend you make your decision based on ground temperature. The ten or even twenty degree difference between ground and aloft temperatures will not make that much difference to your engine. What you are concerned about is bringing up oil temperature to a working range before takeoff High power with semi-congealed oil is what does the damage to your engine.

The plate should remain installed for the worst of the winter and retnoved when you can expect temperatures to remain generally above the 50 degree mark. It is not an item which you should have to install and remove on a regular basis for each individual flight you make.

Seat Adjustment; Painting Wing Tips

I am six-foot-eight and get very cramped and numb after one hour. What adjustments can I make to the seat back and pedals to be more comfortable on longer flights'!

What paint does not peel from my fiberglass droop wing tips' This is very annoying.

John C. Blair
Plymouth. NH 03264

Unfortunately, neither the seats nor rudder pedals are adjustable so as to provide you with much relief. Some members have retnoved the 140 seats and replaced them with the later model articulating seats, but that still will leave you with a cramped cabin. Unfortunately, when the Cherokee (and most other light planes) were designed, it was to a one-size-fits-all philosophy.

As to the paint on the wing tips, just about any good paint should adhere - enamel, polyurethane, or lacquer. As with any painting, the end result will depend largely upon surface preparation. According to the folks at Randolph Products you need to use an epoxy primer before painting. Then paint just as if it were metal.

Still Needs Shoulder Harness

The Piper Owners' Magazine recommends shoulder harness kits for the front seats of my PA-28. How and where can I purchase this kit for my 15, S/N 47 I!

I recently tried Wag-Aero, but their kit did not tit my vintage Cherokee and I had to send it back.

Michael A. Argentieri
West Orange, NJ 07052

As you have noticed, the problem with Wag Aero's approach to the problem - one size fits all - is that it often does not work.

Unfortunately, you are left with just one viable source fora kit and that is Piper Aircraft Corp. Service letter 953 covers retrofitting shoulder harnesses to Piper products.

Also unfortunately, that bulletin indicates that a standard kit is available for later model planes - those wit11 serial numbers after 28-2478. For 150's with earlier serial numbers, such as yours, Piper indicates that installations are available by special order only. Applicability information and price quotations will be provided by Piper Aircraft Corporation upon requests submitted thorough your Piper Field Service facility, according to Piper.

Solid Crank Means No C/S Propeller

by Dallas Vaughn

Larry Dixon is going to be awfully disappointed if he attempts to convert an 0-360-A4A engine to constant speed operation (March edition, page 13). That model engine, according to my data, is a solid crank engine and cannot be modified lo constant speed.

I thought the first solid crank engine was the A4M as in the Archer. In any case. if there is no red band on the tachometer. covering about 2150 through 2350 rpm, the engine is tlze solid crank version and cannot be modified,

1 have tlze Pacific Propeller STC which converts the A3A to an AIA, then installs the Arrow propeller. I am fussing about whether to use it as is or to attempt to go right to a three-blade. Either way. as you mention. it ain't gonna' be cheap. Figure $5-6 thousand.

Matching Your Plane's Paint

by Bob Phillips

When trying to match paint colors you can get very close by taking a sample to an automotive paint supplier. They can mix any shade and color in aerosol cans to give an exact match as I did with red, orange and white on my 235.

Hard Starting Cherokee 180

We have a 1967 180 with a Lycoming 0-360-A4A installed which has 710 hours since major. On initial start up tlze engine starts easily using normal procedures.

However, on subsequent starts. with a warm or hot engine, it is extremely difticult to start using either normal or alternate starting techniques. Virtually every starting technique has been tried. including attempts by several different well-qualified A&Ps with 0-360 knowledge.

When start up is finally achieved, it is difficult to pinpoint what was done to make it start. What seemed to work on one start is no guarantee that it will work on the next one.

Any ideas on techniques or possible problems?
Hob Graves
Pensacola, FL 32507

Could be you have a problem with your engine. I note that it was majored just 210 hours ago. Check tlie routing of the fuel lines to make sure they are not unnecessarily close to exhaust parts. Most of tlie time, hard starting when hot turns out to be a fuel-related (rather than an ignition) problem.

Most hot-start problems (and suggested cures) relate to fuel-injected aircraft. For carbureted engines, generally you want to simply crack the throttle and then start cranking. Do not pump tlie throttle.

If this fails, you might try two short (partial) bursts with the primer, and then try cranking one more time.

Cranking should be liniited to no more than 10 seconds at a time. with a three-minute cool down period - you do not want to damage the staner during a starting attempt.

If the problem persists. you may need to look elsewhere, i.e., carburetor adjustment and magneto operation and timing.

Wants Wheel Pants

I recently purchased my first airplane. a 1078 Archer II. It is really a great airplane.

My problem is the wheel pants. The 1978 model came out with tlze current fat style wheel pant. These pants are very aerodynamic and look nice - from a distance.

My wheel pants. however, were made of injection molded plastic. The nosewheel cover seems tine. but the main wheel pants are cracking and have already been repaired. I really need to replace them.

The Piper factory wants $3,500 to replace the main wheel pants and they have at least a six month waiting list.

Can you suggest companies that I should contact. I have been told there is a builder in Texas. but I cannot find out who he is. What about Globe'! A salvage yard?

It is very important that the quality be truly good.
Bob Eurick
Beaverton, OR 97006

In response to your letter concerning wheel pants, right now your choices are pretty much either Piper or Globe. You can also try the salvage yards. but tlze wheel pants you get may or may not meet your qualifications.

Globe Fiberglass does build quality products and the fiberglass holds up much better than the factory job. You probably should call Ken Rickert at Globe and talk to him about what is available. He is probably the most knowledgeable guy in the business.

I know of no one in Texas. Kenzie Industries makes some interior plastic parts. but no fairings or exterior plastic.

Penn Yan Offers 160 hp Conversion

Judging by tlie number of questions we receive. it would appear that there are lots of Cherokee 140 owners who would like just a little bit more power in their planes. This is the reason a conversion to 160 horsepower is so popular.

A number of companies have held STCs for this conversion over the years - many have gone out ofbusiness, but tlie conversion is still available from Penn Yan Aero Services, of Penn Yan, New York.

Penn Yan's STC calls for removal of the 0-320-E3D engine and installation of a 0-320-D3G engine or a conversion of tlie E2A engine to 160 horsepower. The end result: the owner of a Cherokee 140 or a 151 can get the extra horsepower which will make for much more reassuring takeoffs and climbs.

The Penn Yan conversion requires the use of a standard Piper propeller. It can be pitched to either 58 or 60 inches, according to the STC, although Penn Yan recommends the 58 inch pitch.

You can purchase the STC from Penn Yan - the cost is a modest $250 (1994). Or you can pwchase a new engine from the company. They offer a Penn Yan factory rebuilt engine, with the STC, for either tlie 140 or 151 for $8,750. Or, if you want a (Lycoming) factory rebuilt engine, the cost is $9,816 for the 140 or 59,916 fora 151. All engines are priced in the crate, with new magnetos, new wiring harnesses, new fuel pumps and factory rebuilt carburetors and starters.

For more information contact Penn Yan at 2499 Bath Road, Penn Yan, NY 14527. Or call (315) 536-2333 or (800)727-7230.

Tightened His Sun Visors

by Lou Brinkman

The visors on my Archer liave been loose and wobbly almost from the day it was built. I removed the visor swivel arm and drilled a #48 hole in the threaded end, just above the upper phenolic spacer. I then replaced the existing lock nut with a 10-32 castle nut and cotter pin. The hole in the frame is larger than tlie ann to allow for adjustment. Be sure to use a 1/4 inch external star washer between the top of the frame and the upper spacer as the internal type will chew up the arm when the visor is rotated.

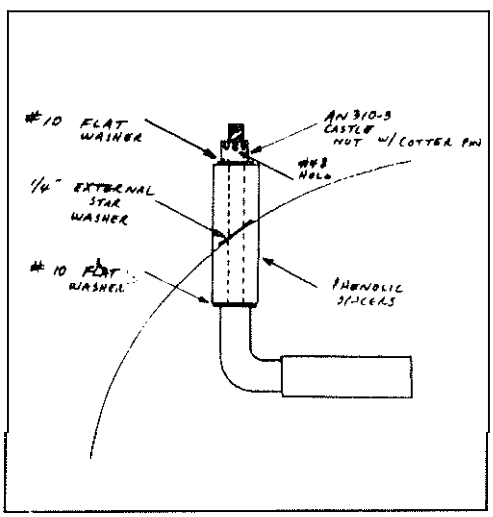

Watch Out for Nesting Birds

by August S Raber

If you own a Cherokee you qualify as a bird watcher; not the flying machine kind, but the nesting breed.

Spring brings out nesting instincts and the Cherokee has lots of holes for birds.

I purchased covers for the cowl and air filter for my Cherokee 140, but no one fabricates covers for the rear openings next to the horizontal and vertical stabilator.

So, I made some out of plastic. No glue, no velcro or screws. They slip in and out easily and don't blow away in a wind. Best of all, for $2 worth of plastic, you can make several sets for yourself and friends.

Metal cutting shears work best for cutting the plastic I used. The yoke should be full forward and secure.

After cutting out the covers I placed masking tape pieces one inch apart diagonally on each and spray painted them red. Removal of the tape gives a striped effect. This, plus a red plastic streamer, reminds you to remove them before flying.

If anyone is interested, send me a stamped-self addressed envelope and I will send you my patterns and a small saniple of the plastic I used plus notes on where to cut and where to bend. Best of all, it is free.

Add On Strobe

by Dan Caliendo

A strobe as a replacement for a rotating beacon is a good way to improve a Cherokee. You have previously suggested Whelen, but anyone considering this route should also consider contacting Knots-2-U (616-526-9646.)

I do not want to insult anyone's intelligence, but I was naive enough to learn a simple lesson the hard way.

Whelen (and I suspect Knots-2-U) offers a beacon replacement that is all self-contained as far as the power supply goes. All you need is the hot wire you already have going to the tail.

I spent unnecessary dollars getting a unit that would tie into my wingtip strobes before I discovered this fact. Another lesson was to avoid the clear lens on tlie front and red lens on hack model. The strobe hitting the wings and prop were a vertigo-inducing distraction.

Get the full red lens and you may even want to put a strip of tape on the lower 1/2 to 1/3 on the inside of the lens at the front to minimize the red strobe on the wing.

Years ago 1 rebuilt the old revolving bulb strobe on my 180. The rebuild lasted less than two years and was almost as expensive as astrobe. (Again. I got scared off by the price of a separate power pack.)

Glareshield & Door Weather Stripping

I have a few questions on my 1972 Cherokee 140.

I Where can I obtain a pattern for the material that covers the top of the instrument panel (where the compass and defroster vents are mounted)'

2 What would be a good choice of material to use as a replacement for the above'!

3. Several years ago I replaced the quarter-round seal on my cabin door. Although I used agenuine Piper seal, the final fit wasn't very snug and had to be augmented with weather-stripping to eliminate wind noise (the door is not sprung or twisted). The seal was positioned so that both flat surfaces were against a surface. In order to obtain a tighter fit it seems the seal would have to be positioned so that only one flat surface was providing support, but doing that looks

as if it wouldn't provide adequate swface contact for ample strength. I wish to replace the seal once again, this time positioning it so additional weather-stripping isn't required. Can you tell me the correct placement'!

4. What type of adhesive do you recommend'!

Paul Gregory
Seymour, CT 06483

Tlie glareshield area on top of a Cherokee panel often looks terrible because tlie heat through the windshield causes it to crack and fade. In fact, Don Stretch, of Airtex Products says lie receives about five calls a day frotn owners who want to refinish theirs.

Unfortunately, there is no pattern available. You need to make one yourself, custotn fitting the area with butcher paper or some other material. Then use that material as your pattern.

Don says lie recommends a flat-finish black vinyl material. He sells, what lie calls the Cherokee cover, for $20 - an excellent buy. You can use either regular vinyl material or you can use pleated vinyl. Cloth will work, but it not only dry-rots, it will fade quickly in the hot sun and soon look ratty.

Installation just about requires windshield removal and you had better plan on a hard day of work. This is one reason the job is often done by owners themselves - they get sticker shock when they add up tlie cost of eight hours of shop time.

Don says he does not waste time on the defroster ducts - drill off the screw heads and let the screws fall to tlie floor. Then, when you are ready to reinstall, drill new holes and mount the ducts with sheet metal screws.

When cutting material, make sure you leave about a half inch to tuck under edges - eyebrows or panel edge. You can tuck the material under molding edges using a putty knife.

Sealing a Cherokee cabin door is always a headache because the door is always somewhat irregular - it is tighter in some places than in others.

You need to take enough time to fit the seal, working it in so it is looser in those areas where there is a bigger gap.

One possible solution would be to use a different seal. A seal which comes highly recommended is called the "5022 Seal" and is available frotn Brown Aircraft Supply, 4123 Muncy Road, Jacksonville. FL 32207 (904) 196-6655.

A good adhesive, both for the dash and for installing the door seal, is 3M 300L which is both easy to work with and highly effective.

Two Saratoga Service Bulletins

Piper has issued Service Bulletin No. 968 pertaining to the Saratoga II exhaust system. Piper considers compliance mandatory.

According to the bulletin, reports have been received of one or tnore loose exhaust pipe attachment nuts and of leaking exhaust pipe to cylinder head gaskets.

The bulletin announces alternative attaching hardware and improved exhaust gaskets to cure tlie problem,

The bulletin requires discarding of the twelve plain nuts and lockwashers which attach the exhaust pipe flange to the engine cylinders, as well as of the six exhaust gaskets.

The exhaust system is then reinstalled with six blow-proof exhaust gaskets. and twelve each washers and locknuts. Parts are available from Lycoming. Piper suggests compliance at the next regular inspection. but not more than 50 hours after receipt of the bulletin.

Also. Piper has released Service Bulletin 926A which applies to several Piper models including the Turbo Saratoga and Turbo Saratoga SP (1980 through 1984 models with listed serial numbers.)

The bulletin was issued to assure distribution of Hartzell service bulletin 165E which pertains to cracks in certain Hartzell three-blade propeller hubs. These cracks. if not detected, may lead to loss of propeller blades.

The bulletin is applicable only to propellers listed in a hub model/serial number listing.

The bulletin requires eddy current inspection of the affected hubs at 10 hour intervals.

"Hartzell recognizes that such demanding inspection requirrtnents will cause added difficulty in meeting aircraft operational commitments, however, we believe that such requirements are necessary in order to maintain flight safety. Hartzell is, and has been attempting to dramatically increase the production rate of replacement hubs which, when installed, will eliminate the requirements of this bulletin."

The bulletin further cautions that a visual inspection of the hub, in itself, is no longer considered adequate. An eddy current inspection must also be performed. It also contains the caution that "effective eddy current testing requires experienced. well-trained personnel, who are familiar with proper procedures for instrument calibration and usage of the equipment."

Battery Preservation - A Few Don'ts

by Terry Lee Rogers

More aircraft batteries are replaced because of carelessness or inattention than from any other cause. And it is a real shame, because battery care is one of the easier preventive maintenance tasks wliicli a pilot may legally perform.

Aircraft batteries are the familiar lead-acid type use for ages in aircraft and automobiles alike. But unlike the autoniotive counterpart, tlie aircraft battery requires a bit more TLC - it is lighter in weight and a bit more delicate than the automotive variety.

Battery maintenance has been covered in these pages before - it involves keeping proper water level in the cells and periodically inspecting the battery and cables. But there are a few definite don'ts which must be avoided if decent battery life is to be expected.

So, here are some of the more common mistakes which pilots make (and which are guaranteed to reduce your battery to scrap value in no time at all).

√ Failure to inspect and Service Frequently in Hot Weather. Hot weather affects your battery requiring more frequent service. The reason: chemical reactions occur more rapidly as temperatures rise. Everything a battery does occurs at a quicker tempo during summer months.

As a result, inactive batteries tend to discharge faster in hot weather and active batteries tend to gas the electrolyte taster in summer. In fact, reactions inside a battery increase in speed exponentially according to temperature!

What should you do? First of all, check the battery more frequently - at least twice a month during the summer. Bring the water level at each cell up to level. Keep a record of how much water is required to bring each cell up to snuff and you will have an idea as to how soon you need to check again.

Check the specific gravity of each cell. To do so you will need to buy a **good** hydrometer. You want a small hydrometer which will work well with the small amount of electrolyte you can extract from an aircraft battery, and one which has a numerical scale - not just a "good-bad color indication or a series of floating balls.

The readings should be within .050 of each other. If the average reading is 1.225 or less, you need to remove the battery from the plane and place it on a charger. You should use a charge rate approximately 10 percent of the amp-hour rating of the battery (three to four amps for a typical 35 amp-hour battery).

You are properly charged when cell gravity readings reach about 1.265 or when three consecutive hydrometer readings taken an hour apart show no change in specific gravity. Also, discontinue charging any time the battery electrolyte temperature exceeds 120 degrees (the battery will be very warm to the touch). Temperatures in excess of this will damage the battery plates.

d Failure to insure good connections. Battery terminals and cables need to be cleaned periodically. You need to remove the terminal wing nuts and eyeball the situation. Use a wire brush to insure good conductivity.

After everything is cleaned up, you reconnect. Twist the wing nuts as hard as you can with your fingers; too loose and resistance will cause the terminal to overheat.

But too tight is bad, too. The screws inside the battery terminal are actually bolts which were imbedded in the tenninal when it was formed from molten lead. Tightening the bolt too much will cause it to loosen and form a cavity in the tenninal. This loose bolt will cause resistance and can result in a post meltdown

√ Overfilling the battery You do not want cells to run dry, but you also do not want to overfill To do so causes the battery to lose acid, a problem in and of itself And as a secondary problem, guess where that acid has a tendency to end up? That's right, inside your battery box.

The filler tube inside the battery ends in a split ring at the bottom. You want to have electrolyte cover the plates, but not go above the split rings.

d Overcharging. If your battery is constantly running dry. either you are not checking it enough or your system is overcharging. Check out the charge voltage with your aircraft engine running at a high idle rpm. (God, watch out for those propellers, folks.)

The reading should be no more than 14.8 volts. If it is higher, your voltage regulator needs adjustment or replacement.

√ Permitting acid bridging. If wetness appears on the battery, it needs to be cleaned up. If it persists, you end up with acid bridging - the acid forms a good conductor from one battery terminal to another and your battery will be constantly discharging. That is until it dies completely and you end up buying another.

To stop acid bridging, simply wipe the top of the battery with a wet towel treated with baking soda (make sure no baking soda enters the vent caps). Repeat the treatment if acid buildup is heavy.

√ Boost Charging the Battery. This problem occurs when you suddenly find you have a completely dead battery and you are in a hurry to get somewhere. You do not want to wait for a proper charge (remember the ten percent rule above) so you opt for a "quickie", a charge in which the battery is subjected to a high rate charge for ten or 15 minutes. This can be a real battery killer.

If your battery is old and badly sulfated, you will not charge the battery with this condition - you will merely overheat it, boil out some of the acid and perhaps warp the (sulfated) plates.

If your battery is in very good condition, but merely run down (you did remember to turn off the master switch the last time you flew, didn't you?) the quick charge may be used in an emergency, but it needs to be limited - no more than 10 amps for 15 minutes and watch the temperature carefully,

If the battery is really old and sulfated, you might try to revive it with a trickle charge - a charge rate of less than one amp - for two or three days. If that does not do the trick, the battery is beyond help and a new replacement is in order.

√ Failure to keep records. You need to know how old your battery is, what its specific gravity history and water usage history have been. Otherwise, you are not going to be able to spot early indications of trouble and you will end up being one of those who first find out he has a problem when it is time to crank up the engine. That can be as inconvenient as heck

One final thought Take a few precautions when working around a lead-acid battery That acid can eat through aluminum - it can eat through flesh and eyeballs, too

Safety glasses may seem like the sissy way to go, but ask anyone who has been surprised by a sudden, unex-

pected, explosion from a battery, and you will know why some simple precautions are necessary.

Make sure you have an ample supply of water available to wash off any skin or facial areas which come in contact with acid.

Coping with the Bendix Mag AD's

Magnetos are one essential aircraft accessory which is often neglected by aircraft owners. Out of sight, out of mind. Two events can bring the magneto out of anonymity - sudden engine stoppage or the receipt of an AD issued by the FAA.

Although AD's on magnetos are rare. owners of many Bendix-equipped aircraft have bad to contend not only with one AD, but with two...and two service bulletins as well. All since the first of the year.

Each AD was promulgated to address a particular problem. And each AD comes with one service bulletin to expound on that deficiency.

First the AD's. AD 94-01-03 requires replacement of certain coils in Bendix magnetos, including the S-1200 series. The FAA is estimating that the AD will affect 20.000 planes with an "impact" on general aviation of approximately $15 million. This allows for $700 for parts for each magneto.

However, the same agency is suggesting the AD can he accomplished with one hour of shop time per magneto. That hour would be spent opening the cowl. removing the magneto, splitting the magneto, identifying and replacing the coil. reassembling the magneto, reinstalling it on the engine, a finally re-timing the engine. Quite a busy hour, indeed.

The AD would need to be accomplished within 100 hours or at the time of the next inspection, whichever comes first.

AD 94-06-09 covers replacement of certain capacitors which may tend to short internally and produce a "hot" magneto even when the ignition switch is in the off position.

The AD must be accomplished within ten hours of receipt of the "Priority Letter AD."

Both AD's nerd not be complied with at the same time, although it will be more economical in many cases to do **so.** AD 94-06-09, in some cases, may be performed without removing the magnetos - depending on the clearance involved.

What specifically needs to he done?

The coils are covered not only by AD 94-01-03, but by Teledyne Continental Mandatory Service Bulletin (MSB) 614. The first problem involves determining which magnetos are involved.

All S-1200 magnetos are included if they have a red Bendix (not TCM) data plate having a serial number with a letter prefix A and a number of 132843 or lower. Also included are red data plates (Bendix, not TCM) without a letter prefix and with numbers below 2000000. Finally. these Bendix magnetos are included with a blue data plate, marked "remanufactured." with a serial number lower than 901001

A note indicates that the newest magneto affected by the bulletin was built December 31. 1978. Magnetos built by Bendix in Jacksonville or by TCM in Atlanta are not affected.

Of course, to use this information you nerd to read your data plate. Wash those plates carefully with soap and water. One member reports that heavy cleaning with solvents not only removes the data, it removed tlte color from his plate. He ended up not knowing what he had.

What you will do is open the affected magnetos and check for coils identification. The bad coil in tlte S-1200 series is marked part number 10-349271 and is "opaque amber" in color. That part needs to be replaced with part number 10-391088 (although you are supposed to order 10-391088-1).

Once the work is done the magneto case is to be stamped with a "C".

Capacitor replacement is covered by AD 94-06-09 and Teledyne Continental Critical Service Bulletin (CSB) 641. Covered are magnetos with capacitors, part number 10-349276, with date codes of 93-40 and 93-42

When the work is accomplished, the magneto data plate is to be stamped with a letter "E".

Slick Aircraft Products. the other major magneto supplier, is not shy in suggesting Slick Magnetos as an alternative method of AD compliance. Slick magnetos are not affected by either AD and tlte coa of obtaining two new Slicks is about half what AD compliance would cost (including a new wiring harness.)

To help make its point. Slick announced a rebate program which would rebate a total of $200 and also provide a 5300 core credit for anyone who switches to Slick magnetos and returns the original Bendix magnetos and harness to Slick.

Slick's reputation suffered several years when the company concentrated on "throw away" magnetos. but recent products have gotten much better reputations.

For more information contact your Slick distributor, or call the Slick service department at (815) 965-4700

Refurbish Those Control Yokes

The instrument panel is impressive, the upholstery immaculate. Yet there it sits - a deteriorated control yoke. It looks bad, it feels bad.

Most control yokes are an aluminum alloy that is plastic coated. Eventually the plastic cracks and peels off the substrate. Sweat and contaminates corrode the exposed alloy leaving pits and pock marks.

The original coating was created using powdered plastic which is melted onto the aluminum. The process has two problems: poor adhesion and pinhole sized marks in the finish.

Over the years, CPA has recommended several

firms to recondition yokes, but those firms have since disappeared. However, Sacramento Sky Ranch is offering a service which makes those yokes look brand new.

They use a special process which involves stripping off the old plastic and then pre-cleaning the yoke with plastic bead blasting.

The yoke is then heated to 300 degrees F. to degas. Next, virgin glass bead is used to blast clean the yoke, Then, to eliminate any traces of glass bead from the metal the yoke is ultrasonic cleaned and oven dried.

Finally a coating is applied. The coating is a hybrid epoxy/polyester plastic which is applied as a dry powder. eliminating any air entrapment. The powder is then cured at 400 degrees F.

Just about any color or texture can be applied. Typical finishesare ink black, a high-gloss black, yoke white, a cool, slightly textured finish, and yoke gray, an attractive slightly textured finish.

The company warns that there are limitations to the process. The quality of the finis11 is dependent upon the quality of the substrate. If the yoke has deep corrosion pot marks tlie finished product will have some pot marks in tlie finish, although somewhat filled and rounded. Sacramento will not use fillers in the metal.

"Ifa yoke has lost enough metal to require a filler than it has probably lost its structural integrity," according to the finn

To get yokes refinished, you need to completely strip tlie control yoke of wiring and switches and send it to them. Access plates will be *finished* if *included*. Decals and identification plates are removed and sent back, uninstalled. The company warns they might not be salvageable.

The price'! $150 per pair for standard colors, $100 for one yoke. Standard turn around time is three days.

For more information contact Sacramento Sky Ranch, P O Box 22610 Freeport Blvd., Sacramento, CA 95822 (800) 433-3564, (916) 421-5719.

For those who want to spruce up tlie control yokes without so much trouble or cost, consider the control grips offered by Warren Gregorie & Associates.

These grips are made of leather and fasten easily to *the* yokes wit11 velcro at the back. The cost *is* just $39.95 for most models, although a special model for Cherokees with the Bow Tie control wheel cost $29.95 each. A build in push-to-talk switch is available for an additional $30.

For details contact Warren Gregorie &Associates, P O Box 11562, Oakland. CA 9461 1 (800) 634-0094.

How To Check Wheel Alignment?

Lou Brinkman. of La *Habra*, California, *com*plained that tlie service manual for his Archer did not cover main gear alignment. His answer:

Many PA-28 manuals do not cover the procedure, but it is spelled out in the Arrow manual.

Only the toe-in is adjustable on Cherokees - castor and camber are nonadjustable. Toe-in is adjusted by moving washers around on the joint connecting the torque links of the wheels.

For most planes, the factory standard was probably one washer under the head of the bolt and three spacer washers under the nut - a total of four washers. If you add an additional washer to the head, you need to remove one from the end to keep the total number of washers the same.

Here is the procedure:

I. Place a straightedge, no less than 12 feet long, across the front of both main landing gear wheels. Butt the straightedge against the tire at the hub level of the landing gear wheels. Jack up the plane just far enough to obtain a six and a half inch dimension between the center line of the strut piston and the center line of the center pivot bolt of the gear torque links.

2. Devise a support to hold the straightedge in this position.

3. Set a square against the straightedge and check to see if its outstanding leg bears on tlie front and rear side of tlie brake disc. (It may be necessary to remove the brake assembly to gain access to the disc.) If it louclies both forward and rear flange, the landing gear is correctly aligned. Correct toe-in for the main wheels is 0 degrees +- 112 degree. Piper recommends a carpenter's square for this purpose because if its especially long legs.

4. If the square contacts the rear side of the disc, leaving a gap between it and the front tlange, tlie wheel is toed out. If a gap appears at tlie rear flange, the wlieel is toed in.

5. To rectify the toe-in or toe-out condition, remove the bolt connecting the upper and lower torque links and remove or add spacer washers to move tlic wlieel in the desired direction. (Generally, one AN-960-416 washer is good for about half a degree of adjustment in or out.)

6. Should a condition exist that all spacer washers have been removed and it is still necessary to move the wheel further in or out, then it will be riecessary lo *turn the torque* link assembly over. This will put the link connecting point on the outer side allowing use of spacers to go in the same direction.

7. Finally, recheck wheel alignment. If the alignment is now correct, safely the castellated nut with a cotter pin. You are finished.

Open Door Can Alter Characteristics

by Donald Renner

In my Cherokee !40 the lower door latch sometimes does not get fully closed and the door will crack open *in flight*. If the upper latch is locked there are no control problems whatever, just a little extra wind noise and a normal landing can be effected easily. Once I attempted a normal landing with both latches open. The door was trailing open in the wind and I was surprised to find greatly increased vibration on short final.

The Cherokee Starting System

By Terry Lee Rogers

Based on past performance, it can be said there are two kinds of Cherokee owners: those who have had starting problems and those who will.

The Cherokee is a tine plane with an excellent Lycoming engine (Turbo Arrows are tine, too.) But with a starter motor up front and a battery in the back. problems do develop. And the use of a non-geared starter on the 140 compounds the problem.

Starter problems fall into two areas: mechanical and electrical. Let's take a look at a typical Bendix starter and see how it works mechanically.

Meet Your Rendix

The grinding noise you hear when you crank your engine is not the sound of the starter motor which is relatively noiseless. The grinding comes from the Bendix adaptor which mounts on the front of the motor in a cast iron housing.

The unit consists basically of a sliding pinion gear on a spiral-splined shaft. When the shaft spins the pinion wants lo slide down the spiral spines because of inertia. This drives tlie pinion forward to engage the flywheel.

Now the flywheel is turned until tlie engine fires. Presto. Tlie spinning tlywheel now drives the pinion backwards which causes it to screw itself down the shaft and out of tlie way until it is needed again.

A very simple device which created quite a fortune tor Vincent T. Bendix, the inventor, and permitted the self-starting automobile and airplane.

Actually, automobile and airplane Bendix drives are nearly identical. But aircraft have far more problems because of the starter placement - right out in front where it is exposed to rain, snow and din.

Once the splioed shaft becomes contaminated with even a small amount of din or ice the pinion can no longer work its way along tlie shaft. It cannot move forward to engage the tlywheel or, what is worse, it may become stuck during cranking and fail to disengage when tlie engine cranks.

This has happened many times and when it does you can be sure you will need a complete starter motor and Bendix drive. The unit continues to speed with the engine until all bearings and moving parts are totally destroyed.

Cleaning and lubricating the Bendix are the keys to continued performance. Piper recommends a 50 hour interval between servicing. but more frequent lubrication may be helpful.

Silicone spray applied to the Bendix can be helpful, but avoid oil as it can attract dirt. This is a procedure which can and should be performed on every walk around.

But for top performance you will have to plan on removing the unit from tlie plane periodically for more complete maintenance.

Unfortunately, this is not going to be easy - in fact. it is quite a chore. Plan on taking tlie entire motor and Bendix assembly out of the plane as a unit.

First, to avoid any possibility of a short, disconnect tlie battery ground cable. Then, undo all bolts and wires from the starter making notes as to where everything goes. Then remove the unit from tlie plane.

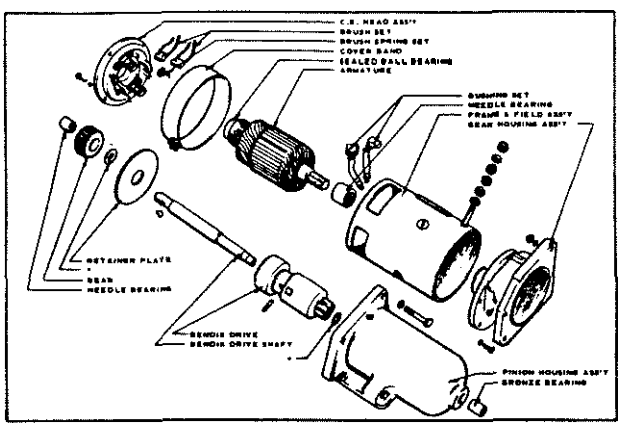

Exploded View of Gear Reduction Starting Motor

Now, move to a convenient working place and remove the Bendix unit from tlie motor. Remove the bolts which hold the Bendix housing to the starter and slide the housing off Be careful to note the position of any washers or spacers. And of course, be sure not to lose any parts.

Now. to remove the Bendix gear push out the pin wliich affixes the Bendix drive to the shaft. (Note, this pin is shown in the accompanying diagram - it fits in the narrow center section of the Bendix drive body.)

With this pin removed the Beadix should slip off now.

Check the unit to insure that the pinion gear slides freely on the splined shaft. Check for badly worn or missing teeth. If there are any plan on buying a new Bendix (cost about $75.)

If the unit appears to be okay, it is time to being reassembly.

Clean all dirt and lubrication from the splined shaft using an appropriate solvent Then, lubricate the Bendix mechanism. Piper recommends a thin film of Lubriplate #777 lubrication for the splined shaft, but other sources recommend a graphite-kerosene mix applied by brush.

(If you are installing a new Bendix, it is already lubricated and you can skip this step.)

Apply #1925 Molytex-0 grease or the equivalent to tlie splined shaft at the point where it connects with tlie bronze bearing as well as to the reduction gear (not on some 140's). Piper recommends using about 1.3 to 2 ounces of this grease in packing tlie gear box and drive end of tlie shaft.

Now, you are ready to reassemble and reinstall the starter motor. reversing the procedure for disassembly.

Torque the attach bolts to tlie engine to 150 inch-pounds and reconnect the battery and the unit is ready to go.

The 140 Non-Geared Starter

One special prohleni exists for owners of 140's. To save some money, Piper designed tlie 140 to use a non-geared direct drive starter. This starter has barely enough power to get the job done when the airplane is new, but when it gets a few years old, performance falls below that of marginal and may not be enough to start the plane.

One quick (but not inexpensive) way to increase 140 starting performance is to replace the standard starter with a geared starter.

A geared starter to replace the standard model costs about $350 to $400. This price. although it seems high, is only about $100 more than a new stock starter, and it may be worth it to a 140 owner who has been plagued with starting problems over the years.

Electrical Troubleshooting

A Cherokee exhibits more than its share of hard starting problems because of the placement of the battery - it is located toward the rear of the plane while the starter motor remains up front.

Compounding the problem of the long cable travel is the use of aluminum cable.

Many members of CPA have changed the aluminum cable to copper to good advantage. Copper cable, although slightly heavier then aluminum, provides lower resistance and more current to pass.

Good contact and corrosion avoidance are a must. Piper advises checking the battery box for signs of corrosion every 50 hours or 30 days, whichever comes first.

The box must be properly cleaned and any corrosion neutralized with a solution of water and baking soda mixed to a consistency of a thin cream.

All electrical connections, throughout the starter system - including the ground at both the battery and the starter motor - must be clean and tight. Otherwise, voltage loss will occur.

Piper recommends an overall starter system voltage check. It must be made witli a low-reading voltmeter capable of reading no more than two volts full scale (one volt full scale is even better).

In checking from the battery positive terminal to the starter motor terminal, while the engine is cranking, the voltage loss should be no more than 0.3 volts maximum. On the otlier side, the voltage from the battery ground post to tlie starter frame should be no more than 0.1 volts.

A loss greater than either of these means there is an overly high resistance in the starter circuit and additional tests must be made over each part of the circuit to locate the high resistance connections.

Cliecksof the starter motor performance itself must be performed by a shop which has proper equipment, including voltmeter, ammeter capable of reading several hundred amps, a tachometer and a brake-arm scale assembly capable of reading foot pounds of torque.

Piper specifies three tests: the no-load test, lock-torque test and the resistance test.

In the no-load test, the motor is spun with the battery while voltage is adjusted to a specified level witli a variable resistance. The amperage and rpm are then measured. Low speed and high current draw indicate too mucli friction or a shorted annature.

Failure to operate, along with a high current draw. indicates a direct ground in the terminal or fields or frozen bearings.

Failure to operate, along with no current draw, indicates an open field or armature circuit or broken brush springs.

Low speed or no speed, coupled with low current draw, indicates high internal resistance due to poor connections, defective leads, dirty commutator or otlier worn or open parts.

High speed and high current draw indicates shorted fields.

In the lock-torque test, the motor, rather than spinning freely, is connected to a brake arm which connects to a

spring scale. The motor is then operated at a specified voltage (controlled by the variable resistance) and tlie torque and amperage measured.

The resistance test operates the same as the lock-torque test except that the pinion is locked into position rather than being pennitted to turn at all. Once again, the proper voltage is applied and the amperage is detennined, but this test does not give a torque reading.

If any of the internal electrical checks show the unit is defective, it should be repaired by aqualified electrical shop. If the tests show it is operating properly and if all external checks show there is no abnormal resistance in the control circuits, the plane should start properly.

The aircraft starter motor is simple - a blood brotlier of the dependable unit found in your family car. It is somewhat less dependable than the car unit because of the conditions under which it is used.

Most pilots think little of their starters until the day they find they cannot start their planes. But periodic preventive maintenance can keep their motors operating like new and their planes flying.

And one final word. Starter maintenance is not one of the items which the FAA permits pilots to do with impunity. To make it all legal, work with your A&P mechanic and make sure that be signs off all work in the aircraft logs.

Fuel, Oil and Hydraulic Leaks

by Terry Lee Rogers

Cherokees suffer from two types of leaks - those which result in water leaking into the cabin, and those which result in vital engine fluids leaking from the plane.

We have discussed cabin leaks several times in the past. This month we will concentrate on those leaks which result in an oily mess on the ramp and which may be the harbinger of expensive future trouble.

Actually, although the majority of potential leaks are of engine fluids, they are riot necessarily so. Induction leaks, for example do not let tluids out - they permit air to enter. But they may mean disaster to an engine which is permitted to operate leaner in some cylinders than is permissible.

So, what are they potential leaks in your plane and what can you do about them'?

Fuel Leaks

An aircraft engine needs fuel, induction, oil, cooling a i d exhaust systems, and any of them can leak. Although it is possible for a metal part to break or crack, generally leaks will not be from a metal part. The leak will come from a seal, O-ring or a baffle.

Let's start with the fuel tanks. The O-rings at the sump drains have a tendency to deteriorate and leak. This can be a real problem when it occurs with a full tank of fuel.

So, why not try a preemptive strike? Every couple of years mn a tank dry - then. with an empty tank, remove the sump drain and replace the O-rings. Then, do the same thing with the other tank.

By planning ahead, you have eliminated a potential problem for peanuts.

To check the fuel system further you will need a helper. With the engine un-cowled, have your helper turn on the electric boost pump while you check the fuel pump housing and the lines running to the carburetor or fuel injector body for leaks.

If yourplaie has a carburetor, remove the air filter and turn on the boost pump. Check for fuel dripping from the venturi or accumulating in the bottom of the heat box. If this is occurring it is a sign of a leaking tloat needle and seat or a fuel-saturated carburetor float. (And you always wondered why you needed to lean the engine so much to keep it running.)

Do not forget the engine-driven fuel pwnp as a potential source of leaks. The AC fuel pump is held together by five or six screws and these have a tendency to loosen in service. Check for tightness every few months. This is a neglected item which is rarely checked by anyone, including some tine mechanics. Make it a point to check it yourself.

Oil System

Although leaks at tlie pushrod tubes of Continental engines are common, they are rare on Lycoming engines. The pushrods, located at the top of the cylinders, should be checked, but rarely should you have to worry about replacing a pushrod seal.

However, tlie oil which goes to the top end in a Lycoming has to go somewhere and these engines have extenial aluminum oil-return lines which can be the source of some dramatic leakage.

These lines carry little pressure, hut they are subject to quite a bit of vibration and rubbing wear. And they are secured to the case with hoses and clamps - just the right combination for creating a leak. Those hoses work at elevated temperatures and go un-inspected for long periods. After awhile you can expect them to be age-hardened and brittle.

Once again, replacing these hoses is not a difficult or exoensive iob. If vour engine has some time on it. plan on replacing the hose sections a i d inspecting the oil-return lines for signs of damage or cracking.

Oil lilies to tlie oil cooler, turbocharger, or prop govenior are subject to leaks and, if a rupture occurs, can be catastrophic. And although Piper recommends replacing all oil lilies every 1,000 hours it is surprising the number of planes with 2,000 or more hours with the original factory hoses. Anyone who wants to tmst his life with a 20-year-old hardened, brittle hose, has no business flying an airplane.

Oil can also leak from the front seal of the plane.

Luckily, however, this is a very rare type of leak because it is also the hardest to fix. Generally, this seal is a large 0-ring which must be stretched with a special tool to fit over the propeller flange (the propeller must also be removed, of course.)

If the front crankcase seal goes out yourplanemay leak oil at the propeller, but more commonly, air pressure during flying will pressurize the case and force oil out the breather pipe. Suspect the seal if oil consumption suddenly goes sky high and there is no indication the oil is being burned.

A final source of oil leakage is the constant-speed propeller on some models. The propellers have an O-ring which sometimes leaks and needs to be replaced. The 0-ring is set in the propeller groove and then the propeller is slipped on the engine shaft and flange. Doing it the other way around may result in a pinched O-ring. Also, care is necessary to insure that the proper O-ring is used. McCauley and Hartzell use similar O-rings, but they are not interchangeable.

Oleo Struts and Brakes

Up until now we have concentrated on oil leaks at the engine, but leaks may appear elsewhere and a pilot should be on the lookout for them during each walk-around inspection.

As most Cherokee pilots know only too well, struts and brakes can leak. Both systems use the same Mil-H-5606 aircraft hydraulic fluid. Determining where the leak is located is usually easy, however, as it is obvious where the fluid is coming from.

Fluid coming from a brake means the cylinder will need rebuilding. Fluid coming from a strut means a strut-rebuild (replacing the O-ring), although an application of Granville strut seal may also do the trick.

Some Different Kinds of Leaks

Back to the engine, there are a couple of additional kinds of leaks to look out for. Although neither results in fluid leaking, they are important and demand attention from the pilot. I am referring to induction leaks and exhaust leaks, of course.

How often has it been since you checked your air box for integrity or for the condition of the seal. Deterioration here will allow dust to enter the engine even when you are not using carburetor heat and will shorten the life of your engine.

More important are those little intake manifold tubes found on carbureted engines. A leak here will cause a cylinder to run lean. Either an exhaust valve will eventually bite the dust due to the higher temperature created or fuel consumption will increase as the pilot increases mixture until the engine runs smoothly (the lean cylinder finally gets enough fuel to run properly.)

How do you spot a leaky induction tube? The best indication is generally found in the form of fuel stains near the gaskets at the intake manifold end.

Exhaust leaks generally result from general deterioration of the system or from corrosion of non-stainless steel parts. However, white or sooty deposits at the cylinder exhaust bosses or at the flanges are indications of a leak. Not only is an exhaust leak dangerous because of the possibility of carbon monoxide, tlie flurry of hot exhaust gasses can erode the exhaust bosses a i d eventually destroy the part.

Blow-proof gaskets are a good investment at just a few dollars each. Not only are they a guarantee against a blown gasket in the future, they can be reused if the system is opened in the future.

In summary, the job of spotting leaks is the job of the pilot. Whether leaks are of oil, hydraulic fluid, exhaust gasses, or induction air, the pilot is in the best position to spot them during his walk-around inspection. Also, he has a vested interest in finding and correcting them before they become bigger problems.

Questions on Early English Bird

My partner and I have been members of the association for a couple of months now, and we are both very impressed by the magazine.

We operate a very old, but nice Cherokee 160, serial number 52. This makes our aircraft one of the very earliest Cherokees about, but with very low hours, she still flies beautifully. However, there are a few minor "niggles" that we would like to rectify in due course.

1. Our aircraft has a generator. With the nav kit we have aboard we have often wondered whether it would be advantageous to upgrade to an alternator. Is this a worthwhile modification? Who makes a modification kit with the relevant new components'!

2. Our engine is a Lycoming with a non-replaceable oil filter. First, is this enough oil filter for this engine, and, if not, can you give me names and information?

3. Our aircraft suffers from some engine-induced vibration at certain ROM and while this is not uncomfortable, it is certainly worse than later model aircraft which have a quite different engine mounting system. Is it possible to retrofit this engine mount, or is this likely to be a very expensive option?

4. When we bought our aircraft the operating manual was very short on a lot of infonilation, such as performance details and system drawings and descriptions. Is it possible to purchase more comprehensive manuals such as those produced for later Warriors?

5. The flight manual states: "The aircraft is not cleared for flight into known icing." It might seem an obvious question, but can you clarify this point for us'? Does it mean tlight in cloud is forbidden or just that flight above the icing level is forbidden? Our aircraft has anon-heated pitot. What effect does rain have on this?

Sincerely yours,
John R. Lawson
Metheringham, Lincolnshire

Cherokee Hints & Tips

Dear John,

The alternator conversion is a good idea - this is why nearly all modern cars and planes use an alternator rather than the old-fashioned generator. Generators have a hard time keeping up with the current drain of modern electronic equipment.

There is one kit STC'd for your plane. It is manufactured by Interav, 106 E. Rhapsody Drive, San Antonio, TX 78216 (210) 344-2785. It comes complete with all components need for the conversion. The list price for the kit is $738.

Although it is possible to get by with an oil screen rather than a filter, it is obvious that a screen just isn't going to do as complete a job as an oil filter. Luckily, it is possible to convert to an oil filter.

Adapters are available from Lycoming for the 0-320 engine. The part number is 77852 and it replaces the housing where your current oil screen is located. The process of making the conversion is covered by Lycoming Service Instruction 1319A available from your Lycoming distributor.

Changing engine mounts is definitely not a cost effective way to proceed. If the vibration is not uncomfortable, you might be best advised to live with it, although a propeller and engine dynamic balance, if available in England, is a solution which has benefited many other'herokee owners.

Likewise, you are pretty much stuck with the information contained in the operators' manual. The more modem manuals were supplied when GAMA adopted a standard format, but the older manuals were riot rewritten. Your manual is as up-to-date as you can get.

Obviously, you do not want to fly your plane into icing conditions. It has no capability of deicing itself and icing is one of those conditions that can only get you into serious trouble.

The phrase "not approved for flight into known icing conditions" is designed to differentiate the Clierokee from those planes which do, in fact, have deicing equipment aboard. What conditions should you avoid? That depends upon how nmch pucker factor you can stand.

You can fly into clouds and above-the icing level (if the plane is properly equipped for instrument conditions), but not if you know or have reason to know you will actually encounter ice. In the US., it is up to the pilot to make this decision, but the record shows that the FAA will second-guess pilots who make erroneous decisions (if they survive, that is.)

Rain will not affect the non-heated pitot, but, of course. ice will, and that is just one more reason you do not want to fly into any situation wliere you are likely to encounter ice. I know 1 personally have no desire to practice partial panel IFR while actually in the clouds.

Sincerely yours,
TERRY LEE ROGERS

Problems With Cowling Hardware

Dear Terry,

In the past five years no fewer than three different mechanics on several occasions told us they properly fixed the retainer and stud on the top cowl fasteners. I got the same story with our last annual and the first time the cowl was taken off these parts dropped into the engine compartment.

I cannot find any suggestions in my Hints & Tips binder Is there any pennanent solution to the proper mating of the retainer and stud to keep them attached (Piper parts 484 428 and 487 719).

I would appreciate any suggestions since ow A&P people do not seem to have the answer.

Sincerely Yours.
L. C. Kolditz
New Athens, IL 62264

Dear Loren,

The problem you describe bas been around for awhile and is getting worse as fiberglass-cowled Cherokees, from the late 1960's to the present wear. The problem exists on many different models right up to the Lance and Saratoga. In fact, the higher horsepower, the more likely the problem.

I talked with Ken Rickert, at Globe Fiberglass, in Lakeland, Florida, who has seen a lot of cowls with worn hardware - in fact, he keeps a small collection of it in his office.

According to Ken, what happens is that the hardware wears and, as it wears, it provides more and more clearance. Vibration increases due to the looser fit and wear increases some more

The hardware can be repaired by replacing the Teflon bushings if the condition has been permitted to go on too long. These bushings are available for about $10 each from Piper or from Brown Aviation, in Jacksonville, FL (904) 396-6655.

If these bushings are not repaired in time, eventually, the hardware becomes worn out and needs to be replaced - not repaired. Unfortunately, although the female portion is fairly easy to replace, the male sections are part of the fiberglass portion of the cowling and are not so easy to replace.

In fact, working with the fiberglass cowling requires technical expertise which most mechanics simply do not have. That cowling is heavy on antimony trioxide - you do not repair it with Bondo or some other fiberglass product which might otherwise work well on a car or boat. A repair by someone who does not know what he is doing can cause more problems than it solves.

The proper repair requires de-mating the hardware and then "encapsulating" it in fiberglass, including several layers of aircraft-quality fiberglass cloth, and with a composition the same as used by Piper. Not only is technical expertise required to work with the fiberglass, as you can imagine, the location of the parts is critical. Just a fraction

of an inch miss-match in the male and female connectors will prevent the cowl from attaching properly to the plane.

Despite the difficulty, replacement of the hardware is the only real permanent solution to the problem if the condition has resulted in damaged metal-to-metal components.

Oil Consumption - How Much?

by Terry Lee Rogers

Just when should you get excitedabout the amount of oil your engine is consuming?

According to most mechanics and other experts, the answer is probably never. Even when oil consumption humps up against the manufacturer's recommended maximum limits, oil bum is rarely a safety of flight item. Inconvenient and expensive, yes. Dangerous, hardly ever.

Most pilots are somewhat shocked at the manufacturers' recommended upper limits. The number (for general aviation engines) ranges from about a half a quart an hour for the 0-235 up to 2.2 quarts per hour for the 0-470-E and J.

What about Cherokees? The upper limit on oil consumption for the 0-320 is 0.7 quarts per hour, for the 0-360 and IO-360, 0.8 quarts per hour, and for the 0-540-B, it is 1.0 quarts per hour.

Think about it. One quart per hour! This comes as quite a shock for most pilots who think anything greater than one quart in six to eight hours is ridiculously extravagant.

Nonetheless, aircraft engines do burn oil. Air-cooled engines have a looser fit than automotive engines and are guaranteed to burn some oil. The only question is how much oil and how quickly in a particular engine.

Just about everyone agrees that the biggest factor in causing an oil-guzzling engine is improper break in, particularly in an engine with Chrome or Cermicrome cylinders.

The standard advice about breaking in engines - don't baby it. Run the engine hard. It is good advice (which applies equally even when only one or two cylinders are being broken in after a top overhaul.)

Unfortunately, even if an engine is flown hard, it will not help much if the engine, after assembly, was extensively ground-run by the mechanic before being turned over to the pilot. You want to run that engine hard from the beginning to eliminate any glazing of the cylinders. When that happens, that engine is never going to break in properly unless the cylinders are pulled and the glaze broken. Then the break-in process can start over again - but oh, what expense and inconvenience it causes.

What Causes High Consumption

We have talked about poor break in - the leading cause of high oil consumption. The procedure is to use mineral oil until consumption stabilizes, usually from 50 to 100 hours after an overhaul. Always use full throttle for take-off during the break in period and use a high power setting for cruise.

After break in, use the proper engine oil recommended by the manufacturer (consult Lycoming Service Instruction 1014 for more information.)

But even though an engine is broken in properly. it does not mean that the pilot is home free for the remainder of the TBO run. It is not uncommon for oil consumption to suddenly increase and then a pilot faces a new set of decisions.

What other reasons are there for high oil consumption'!

√ Ring damage or wear. Rings do wear and when they do they can no longer provide as good a seal as when they were new They tend to pass hot gasses into the crankcase pressurizing the crankcase, and they permit a film of oil to remain on the cylinder walls during the combustion stroke. That oil film is burned as part of the combustion process.

√ Piston damage. A cracked or otherwise damaged piston will permit oil to pass and eventually, may suffer catastrophic failure as well.

√ Stuck rings. Stuck rings do not configure themselves to follow the cylinder walls accurately. Like worn rings, they permit a film of oil to pass and burn in the cylinders.

√ Cylinder wear or scoring. Just as worn or damaged rings will permit oil to pass, so will worn or damaged cylinder wall surfaces.

√ Loss of choke. Normally, cylinder walls are not perfect cylinders. The walls tend to taper down at the top. When this choke is lost, oil conswnption goes up.

√ Ring alignment. Each ring has a gap - this is what allows it to be expanded so it will fit over the piston. Normally, the rings are aligned in a helter skelter manner. However, as each piston ring turns while the engine is operating, the rings occasionally reach a position where the gaps line up. When this happens, it is possible for oil consumption to increase - oil goes straight through the in-line gaps rather than being caught at each ring. Fortunately, this cause of oil consumption bas a tendency to fix itself as the rings continue to rotate. After a few hours of flying, oil consumption tends to return to normal

√ Valve guide wear. Valve guides which are too loose will permit oil to pass through them. Intake guides will permit oil to siphon down into the cylinder after shutdown. This oil will then be burned at the next start up (unless the oil has fouled the plugs so badly that start up is impossible.)

√ Oil Leaks. This is obvious. An engine may he burning excessive oil, or it may be simply leaking it out. Worn or torn gaskets or seals are a problem. Also, overfilling the engine will cause it to be thrown overboard.

√ Pressurized case. The crankcase may be pressurized if the engine front seal is defective. Ram air, caused when the plane flies through the air, causes a high pressure at the front of the engine. This pressure can pass through, behind the

propeller, if the front seal is defective. The pressure then forces oil from the breather. It ends up on the belly of your airplane rather than in the crankcase.

In addition to monitoring oil conswnption, there are a few other diagnostic tools which should give you an idea of the condition of your engine.

A differential compression check will show whether there is excessive wear or damage to valves, rings or cylinders. Your mechanic will rotate the cylinder to top dead center (TDC) on the compression stroke. Then, after insuring that the prop will not turn (a very important safety check - that prop can take off your arm) he will introduce 80 psi air into the cylinder and observe how much is retained. If air is escaping past the rings, a hissing sound will be heard at the crankcase breather. If it is escaping past the exhaust valves, the hissing will be at the exhaust pipe. And if it is escaping past an intake valve, the hissing will be at the intake side of the engine.

The procedure is specifically covered by Lycoming Service Instruction 1191

And one other tool, oil analysis - especially analysis over a period of time where trends are monitored - will show whetherrings are wearing abnormally or whether cylinders or other engine components are wearing at a high rate.

Turbocharged engines have an additional source of oil consumption - oil passing through the turbocharger seals. If this occurs, the turbocharger must be replaced or overhauled. Also, on turbochargers, the oil drain line which returns oil to the crankcase must be checked for blockage. A blocked line will cause high pressures which will eventually burst the turbocharger seals and permit oil to enter the engine via the coinpressor.

Should you continue to fly your engine when it is burning oil at the maximum rate suggested for that model engine - even a quart or hour or so. Yes, it is not a critical safety item.

But you should not put that planned overhaul off too long. Although high oil consumption, in itself, is not dangerous, it can lead to other problems.

Rings can gum up and then break. Then you have not only high consumption, but metal throughont the engine. Your core value may have just gone way down.

Valve and cylinder damage are real possibilities, too. And that high oil consumption may just cause you to run out of oil during a long cross country.

Yes, you can continue to fly with high oil consumption, but not for too long. That oil consumption may just be telling you that the engine is on its last legs and in real need of a rebuild.

Oil Flow, Screens, Filter, Cooler and Pressure

(From Lycoming Flyer)

The flow of oil through a Lycoming reciprocating aircraft engine is known to be a necessary function during the operation of the engine. Pilots are often not at all concerned about how this function occurs, as long as the oil pressure and oil temperature indicators show a proper reading. A & P mechanics, on the other hand, often need to know how the system works and what parts control the flow of oil during various phases of operation.

Because of the large number of calls concerning this subject which are received by Lycoming Service Engineers, we can be sure that there are many who do not have a good understanding of the oil system.

It is not surprising that many A & P mechanics do not have a firm grasp on the operation of the oil system. There is room for a great deal of confusion since there are two basic systems and several variations on each of these.

Except for the screens, filter, and oil cooler, the flow of oil through the engine is completely predetermined by the engine running clearances and by the passages which are drilled in the crankcase and accessory housing during engine manufacture.

The flow of oil serves three purposes. First, it lubricates, but cooling the engine by carrying away the heat generated by combustion is a second purpose which is often just as important.

Many engines, particularly those which are turbocharged, have oil squirts in each cylinder which are designed to direct cooling oil on the back side of the piston.

And finally, the oil cleans the engine by picking up dirt and depositing it in the screens or filter, or by keeping that dirt in suspension until the oil is changed.

The oil which has done its lubricating, cooling, and cleaning flows by gravity back to the oil sump. From the sump, the oil pump pulls oil through the suction screen.

This screen will filter out large particles of carbon, dirt, or metal. The pwnp then forces the oil through one of the two basic systems. In each of the two basic systems there is a valve which forces the oil through the oil cooler when the engine valve is open.

Lycoming engines were originally equipped with a By-Pass valve which was controlled by a spring. Referred to as a spring and plunger type, it functioned as a result of the amount of pressure in the oil system.

The spring controlled bypass system was superseded by a system controlled by a Thennostatic Oil Cooler By-Pass which reacts to oil temperature changes.

Operation of the spring controlled By-Pass system is the result of thick oil which causes an increase in differential pressure across the bypass valve to be open, thus bypassing the oil cooler. As the oil warms up, oil viscosity and pressure in the system are reduced allowing the bypass valve to close and forcing oil flow through the oil cooler.

Although the By-Pass valve helps the engine to wann up more quickly by routing cold oil around the oil cooler, its primary function is for system safety; should the oil cooler become plugged for any reason, system pressure across it will rise and the differential pressure across the bypass valve will again cause the valve to open. This bypasses the oil cooler and prevents a possible rupture of the cooler and loss of oil.

The Thermostatic Oil Cooler By-Pass Valve was designed to provide better control of the engine oil temperature while also maintaining the safety of the oil system by bypassing oil around an oil cooler which is plugged for any reason.

The thermostatic oil cooler bypass valve may be used on engines which use the pressure screen system and on engines which have a full flow oil filter. For most engine models an oil filter also requires an oil filter adapter.

While the oil is cold, this system allows oil to flow through the oil filter without passing through the oil cooler. As oil temperature rises to approximately 180 degrees Fahrenheit, the valve closes and forces oil to pass through the oil cooler. The oil returns to the accessory housiiig where it is routed through the oil filter adapter, the filter, and then again through the filter adapter, accessory housing and finally into the crankcase.

The oil filter is another part of the system where blockage could cause serious problems. For this reason an oil filter bypass is built into the oil filter adapter, or in the case of engines utilizing a dual magneto, into the accessory housing.

These bypass valves are a built-in safety feature which activate as a result of excessive pressure in the oil filter. The oil filter bypass is not adjustable.

Oil enters the crankcase of most Lycoming engines near the top of the right rear cylinder when it passes through the pressure relief valve.

There are three types of pressure relief valve. With either the short or long dome valve, pressure is adjusted by removing the dome and adding or deleting washers which are located under the controlling spring.

There is also a third style pressure relief valve which may be adjusted with the twist of a wrench or screwdriver.

An individual looking for the pressure screen lionsing may not find exactly what he or she is looking for since there are two possible variations. The housing for the pressure screen may have one hole facing the rear of the engine. This housing is used onengines incorporating a spring and plunger to control oil flow, and the single hole will be used for an oil temperature probe.

Another style pressure screen housing has two holes facing the rear of the engine. The small hole is used for the oil temperature bulb connection, and a Thermostatic Oil Cooler By-Pass Valve is installed in the large hole.

Even more attention to detail may be required when an oil filter is installed. The pressure screen housing must be removed and the oil filter adapter installed in its place. With the oil filter adapter installed, either a spring controlled bypass valve installed in the accessory housing just above the adapter, or a thermostatic bypass valve installed in the bottom of the adapter may be used to control oil flow to the oil cooler. Because of the better oil temperature control, use of the thermostatic oil cooler bypass valve is preferred by Textron Lycoming.

For engines shipped from the factory with an oil filter, and requiring an oil cooler in the aircraft installation, it is standard procedure for Textron Lycoming to supply a thennostatic bypass valve. The hole in the accessory housing which is provided for a spring controlled bypass valve is capped with a plug.

A hole on the top of the adapter is provided for the oil temperature bulb.

One case of confusion over the possible variations of this installation was docmnented in the November 1990 issue of Light Plane Maintenance. The owner of a 1976 Cessna 172 could not determine why oil temperature in his engine tended to be high during hot weather. Upon examination, he found that the filter adapter had a plug installed instead of a Thermostatic By-Pass Valve.

"The Case of the Missing Bypass valve". Engines delivered to Cessna for this model year were delivered with a pressure screen housing and a spring controlled oil cooler bypass valve. When the aircraft manufacturer provided an oil filter as an option, the adapter and filter were installed at the aircraft manufacturer's plant, but the original spring controlled bypass valve was retained and installed in the accessory housing.

As stated in Textron Lycoming Service Instruction 1008B, installation of a thermostatic oil cooler bypass valve will provide better control of the engine oil temperature. This aircraft owner did achieve better control of his oil temperature by modifying his oil system to include a thermostatic bypass valve instead of the spring controlled one.

There is one more possible variation to the flow of oil which may be found with a Lycoining engine. Some air frame manufacturers have utilized small engine models without an oil cooler. At the request of these airframe manufactures, these engines are not machined to accommodate an oil cooler. Individuals who acquire these engines for use in their home built aircraft may need an oil cooler to keep temperatures within operating limits.

This can be accomplished by utilizing an adapter - Lycoming part number 62418. Utilization of this adapter will allow the engine to be used and the oil to be cooled, but there are limitations. An oil filter cannot be installed, and only the one-hole pressure screen housing can be used. This limits the system to use of a spring controlled oil cooler bypass valve which is installed in the adapter.

There are several bits of information which may be helpful to those who have now acquired a better understanding of the Lycoming engine oil system. Lycoming Service Instructions 1008B gives instructions for installation of a Thermostatic Oil Cooler By-Pass Valve on engines which have a pressure screen housing and no filter.

Special Service Publication (SSP) 885-1 gives instruction for the installation of engine mounted oil filter kits. And finally, a kit (Number 05K21437) for a remotely mounted oil filter has been developed. Instructions for the installation of this kit are not complete as this article is being written.

Wants Wing Walk Material

John B. Gratzek, of Athena, Georgia, asked how he could repair his wing-walk material. The answer:

For wing walk material you have two choices: Piper sells the material pre-cut - P/N 494718 is a sheet 18 by 56 inches while P/N 494720 is a small sheet for the flap. The cost is somewhere around $30.

Another choice is to purchase the material from Wag Aero, P O Box 181, Lyons, WI 53148. They sell it in one foot width for $39 9 per foot (catalog K-311-001). You will have to cut and shape it to fit. Wag Aero's phone number is (800) 558-6868.

Pitot Heat Elements

One member has pointed out that you do not need to buy a new or used pitot head to get new heating elements. The elements are available from Piper separately and any avionics shop can install them.

For most planes, even without pitot heat, the heads are the same -just the elements are not in place.

The elements are P/N 464-356 for the front element, and it retails for $26.82. The rear element is P/N 464-357 and it retails for $40.69. (A used pitot head runs $300 or SO.)

Cures Leaking Side Windows

by Tom Cox

Want to keep your Cherokee dryerrr? Tired of those side windows leaking? You say you can't stand that musty smell of wetness that causes corrosion and other nasty problems for you and your Cherokee?

Well, brother do I have a fix for you! I was tired of the same problem, so I set out to do something about it.

Go to your local hardware store and buy some colored electrical tape approximately 318 inch wide that closely matches your background color around your windows. This tape is to be installed on the outside. Yes, on the outside!

Clean your windows and edge metal so they are free of all dirt and oil film. Install a strip of tape on the vertical sides first, between the metal and the plexiglass, allowing a 114 inch overlap at the bottom. Be careful with the trimming! Install the bottom tape next, overlapping across the vertical tapes. No need for one across the top - water won't run uphill.

Important - do not overstretch the tape! Allow the tape to return to its normal shape before installing. This is an inexpensive fix for a serious problem.

Induction Hoses Nearly Ruin Day

by Merve Wetherley

I am half owner of a 1970 Arrow, a well-maintained airplane of 4700 TT and 1700 hours since a factory new engine.

Last month at our local Birchwood Airstrip, 20 miles northeast of Anchorage, Alaska, I flew apractice traffic pattern while waiting for my three passengers to arrive. Operations were normal and then I taxied to the ramp, shut down and loaded for the flight to Talkeetna.

Returning to the run-up area and then the active, we rolled down runway 19. The Arrow was close to gross weight, with a light cross wind from the west.

Clearing the tree barrier at the departure end of the runway it immediately became evident my Arrow was neither accelerating nor climbing as it should. Slowly banking right, above the arm of the Cook inlet, a glance to the engine gauges indicated a smooth and inexorable decrease of both manifold pressure and rpm. Something was very wrong.

During the following 30 seconds, while attempting to hold the airspeed above 80 mph, searching the mud flats below for a suitable forced landing area, shoving quadrant levers full forward, checking auxiliary fuel pump on, fuel on proper tank, alternate air to open, magnetos on both, and thinking "This cannot be happening," I managed to nurse the Arrow in a descending teardrop and, after a quick emergency warning to any airplane in the area, touched down mid-runway in the opposite direction from takeoff.

The instruments indicated less than 23 inches of mercury and 2200 rpm. Normal readings would be 29 inches and 2650 rpm. The landing gear was down the entire time.

Taxiing to parking, we secured the plane and drove to a local "watering hole" to contemplate the meaning of life. Jeff, my A&P partner, arrived the following day, removed the top cowling and immediately determined the cause of our problem.

The 3 1/4 inch flexible air induction line, leading from the air filter casing to the 90 degree elbow on the engine's metering valve had completely collapsed allowing only a small amount of intake air. Further examination revealed the following:

1. Air induction line was too long allowing for excessive movement.

2. The real culprit was improper installation of the line prior to our obtaining the airplane. The 3 1/4 inch flexible hose has an inner wire coil for rigidity, but the first few inches of hose fitting over the metal, 90 degree elbow on the metering valve had no wire inside. The hose clamp was only securing the material. After many hours of flexing, vibration and engine heat at this un-reinforced sector, the inner coil un-bonded, allowing the air line to simply collapse.

3. The air line appeared normal at the last inspection as the problem was out of view.

I do not know if our incident was a fluke or if others might experience a similar happening, but hose is cheap and the inspection takes five minutes.

Our little plane now sports new air hoses. Every few flights a preflight includes unsnapping the four fasteners for top cowling removal. You simply cannot view much through the tiny oil dipstick opening. My final pre-rotation call out now includes manifold pressure and rpm readings.

Engine-Out Emergency Procedures for 140

by Donald C. Renner

Here are some thoughts on engine-out emergency procedures for a Cherokee 140:

1. Pitch for best glide speed - 80 mph (outside ring of airspeed indicator.)
2. Set mixture full rich.
3. Switch tanks.
4. Fuel pump on.

If propeller is turning, engine should start or try cranking with the starter. The mag switch can be left on left mag or on both.

If it is ascertained that no power can be restored, prepare for an emergency landing.

1. Squawk 7600 and call Mayday on 121.5. Determine coordinates from loran or give position from a VOR radial or known landmark.

2. Do complete shutdown so that the engine cannot start up unexpectedly. Fuel pump off...mixture to idle cutoff...mags off...open and block the door...turn off the master switch before ground contact.

3. Maintain best glide speed of 80 mph. Do not get too slow.

4. Try to obtain ground contact with wings level...full flaps...slowest possible speed. Sacrifice the wings to absorb kinetic energy.

5. It will take full up trim plus considerable back pressure on the yoke to maintain 80 mph airspeed. Any relaxation of back pressure will result in increased airspeed and resultant loss of gliding distance.

Be prepared for hard ground contact. have the lap and shoulder belts cinched tight. If possible, select a hard surface for ground contact; a soft surface will almost always result in a flip over.

Energy absorption in a gradual manner is the name of the game here. If the energy is absorbed too rapidly serious injury will most likely result.

Weight-and-Balance for 140

Dear Terry,

I am trying to bring my weight-and-balance up on my 140, S/N 28-21528.

I suppose the datum starts at tlie nose cone or in front of it. I cannot figure it out exactly because the measurements don't seem to come o w correctly. Exanple - the whip antenna is located at 131.0 inch ann in the original weight-and-balance data. However, the way I measured it came to a 159.8 inch arm.

Ihave installed some new equipment and I would like to know what the arm is for the instrument panel. I have the information for the CG on the radios and I want to get it as close as I can. I am guessing the arm for the instrument panel is 68.8 or 69 inches.

I have a Cherokee Cruiser information manual for serial number 28-7425001 to 7625275. The arms in the weight-and-balance section are tlie same on some things and different on other items. Example: the rotating beacons are the same arm: 263.4. However, the nav antenna is 1.2 lb. at 203 inches arm on the old plane while the new one has .5 lb at 265 inch arm. I figure the old weight-and-balance was averaged CG instead of actual arm installation.

Also, my aircraft has a hat rack and I can find no figures for its installation in my logbooks that are correct. Was this mod called a close out panel'! I have called Piper who referred me to a dealer in Kansas and I have yet to hear from them

Sincerely yours,
Mitch Darnell
Altus, OK 73521

Dear Mitch,

Actually, you are doing a pretty good job of interpreting the information already. Yes, the datum runs to the front of the propeller spinner, aid you can plan accordingly.

As a general rule, use the actual measured distance to determine tlie ann whenever practical. If it is not practical to do so, you may be able to use the arm specifications for tlie later-model 140. Some arms will remain the same - the location ofradios, for example. Antennas, however, were reduced in size and weight over the years and changes were made in location, so you will want to use the actual arm on them.

Unfortunately, the original data on your plane may be in error - if you are showing a discrepancy of nearly 29 inches on the location of the whip antenna, tlie original figures are obviously way off. Also, if someone installed a different rear bulkhead without making appropriate weight-and-balance calculations, it will be extremely difticult to get this corrected.

But you are on the right track - make your own measurements whenever you can - you should end up very close on any changes you make.

TERRY LEE ROGERS
Sincerely yours.

Ways to Clean Grease from Belly

Dear Terry,

I don't know if you have come across this way to clean the bottom of your airplane. If you have, then, oh well. Anyway, I have tlie same problem everyone else has in getting the accumulated gunk off the bottom. So, I put my beanie on and thought for awhile and came up with hand cleaner I purchased at Pep Boys for 79 cents.

Let me tell you, it works great. Not only did it get the oil and grease off, but the exhaust streak came off in a flash also. I used the kind with no pumice and applied it with a rag on the bottom from stem to stern. Surprisingly, it went through everything down there like adose of salts. Next, I just hosed it off and cleaned the plane as usual with automotive car wash concentrate.

I also tried it on the leading edges of the wing, cowling, etc., with the sane results, only I applied it with one of

those sponges contained within a nylon mesh, rubbed lightly over a wet surface, and, viola. I keep the plane waxed so that may have helped some. It seemed to come off very easily though.

Richard T. Langan
Truckee, CA 96161

Dear Terry

One more belly cleaning method. I simply spray a light coating of WD-40 over the accumulated oil and dirt. It immediately loosens up the oil making it very easy to wipe off with a dry rag. It leaves a nice slick belly that wipes up even the more easily the second time.

Jim Belding
Florence, OR 97439

Auto Fuel Running Rich?

Dear Terry,

I own a 1969 Cherokee 140B purchased in February, 1994. it lias an STC for auto fuel. The exhaust pipes have a thick, black sooty deposit. On takeoff, with full throttle and mixture rich per the checklist, tlie engine throws out noticeable amounts of black smoke.

I have taken one long cross-country from Smithville, TX (84R) to Canidenton, Missouri. The flight took live liours eacli way consuming less than one tank of fuel each way. I estimated five gallons of fuel remaining putting my fuel consumption at 7 - 8 gallons per hour. My 140 does not have a "black belly" from exliaust and observers have noticed the black discharge only on takeoff.

The engine does not run rough or hot, oil pressure is good. I have changed tlie oil filter at 25 hours. The engine does not appear to he "making metal."

The engine lias 110 hours SCOH with 3300 hours on the airframe. When I changed the oil it still had a golden tank color (Aeroshell 15-50.) Since purchasing the Clierokee and flying approximately 30 liours it has not required the addition of any oil. The plugs were sooty, but not fouled.

It lias been suggested that I use 100 LL rather than auto gas. That may be the answer, but I would like to continue the savings in fuel costs. I have become more adept at leaning the engine while flying. I have begun experimenting with leaning the engine on takeoff. I am considering adding a fourchannel EGT/CHT gauge.

Do you recommend that I continue using auto fuel'

Should I use the highest octane auto fuel or the 87 octane grade'!

How about auto gas with alcoliol'? Hangar talk has so far kept me away from any auto fuel with alcohol.

Considering tliat I have an auto filter what is your recommendation for oil changes? I have heard everything from 25 to 50 hours.

Sincerely yours,
Jack Else
Bastrop. TX 78602

Dear Jack,

If you are operating according to the limitations of the auto fuel STC, the use of auto fuel should not cause you problems. The discharge of sooty smoke from the exhaust tends to indicate an over-rich condition. Have you checked to insure that tlie primer lines are not leaking'? Does your carburetor have a metal float installed? Your mechanic may need to take a look at that engine.

Once again, the auto fuel should cause you no problems, but I do recommend using fuel with as high an octane rating as you can get. I know your engine is supposed to run on 80 octane, but automotive octane and aircraft octane ratings are figured differently. Cheaper 87 octane fuel may not cut it in your engine.

And avoid any fuel with alcohol. Tlie alcohol has very deleterious effects on seals and gaskets in the fuel system.

Assuming you are getting continuous use out of your plane and that it does not sit for long periods of idle tinie, an oil change, with filter, of every 50 hours should suffice. If the plane is infrequently used or operated in extremely dusty conditions. than you had best lean toward 25 hour changes.

Sincerely yours.
TERRY LEE ROGERS

Fuel Filler Necks; Nosewheei Shimmy

David Hardin, of Auburn, Washington, askedabout pitted gasoline filler necks aid also about a problem with nosewlieel shimmy during braking and certain taxi speeds in his Cherokee 140. The answer:

Unfortunately. there are no shortcuts for repairing the fuel filler necks. If they are corroded to the point where they are leaking. they need to be repaired. Unfortunately, epoxy or other "quickie" methods are likely to result in short-lived cares. Skycraft can do the most thorough job.

And beware of any attempt to formulate a gasket on your own. Ingestion of foreign material into the fuel system is one good way to have an engine-out accident - it is certainly not worth taking the chance.

Nosewheel shimmy can result from several things - rudder cables with improper tension, worn or mis-assenibled scissors, and worn shimmy dampers.

The cables should be adjusted according to service manual specifications.

One other cure presented itself recently. One member, tired of the shimmy, replaced the shimmy dampener with a solid set of push rods (Piper kit *664* 992V).

Oil Pressure & Temperature: 235

Dear Terry,

I own a 1972 PA-28-235, S/N 28-7210001, equipped with the Lycoming 0-540-I3458 I purchased the aircraft in February, 1993, with 1500 hours TTA&E. The plane now has just over 1700 hours.

Ever since I purchased this aircraft it has shown, after engine warm up of a few minutes, high oil temperature, 220-250 degrees, and low oil pressure, 30-40 psi. It

matters not whether I a n at 12,500 feet or at 4,000 feet, or if the day is hot or cold.

I change the oil and filter regularly at 50 hour intervals. I typically add about one quart per each ten hours of engine time. The annual in September, 1993, showed compression of four 78s aid two 76s. The oil filter has been cut open and did not display any metal.

My A&P added a ninth washer to the oil pressure relief valve spring. He said he'd never seen eight on there before, but we'd try a ninth. It made no difference in either oil pressure or oil temperature.

The A&P said he didn't think there was anything to worry about as he felt that 30 - 40 psi of oil pressure was plenty. The wanner oil temperature was not a problem either, as far as he was concerned.

Any comments, ideas, suggestions, tips, concerns?

The original attitude indicator in this plane recently failed. After a local shop installed a replacement rebuilt unit they taxied the plane around the airport to make sure everything was working. The mechanic then told me my vacuum regulator was not working properly as the vacuum gauge followed the throttle (i.e., low rpni, low vacuum, high rpm, high vacuum - 5 inches). He explained that the regulator would keep the pressure constant, around five inches. I agreed to have a new regulator installed.

Guess what'? There was no change in the vacuum gauge indications alter the new regulator was installed. After a little research tlie mechanic said lie thinks Cherokee vacuum gauges are supposed to follow the throttle so he didn't charge me for the new regulator it its installation. Also, he left the vacuum regulator set at about 4.25 inches saying that this is easier on the gyros. My POH says five inches, so I upped it to five inches.

Is the A&P correct about the vacuum gauge display'! Is 4.25 inches of vacuum better on the gyros?

Sincerely yours,
Edward F. Murphy
Mesa, AZ 85203

Dear Edward,

The Cherokee 235 is known for its propensity to run a bit hot, but I am concerned about the marginal indications not only for oil temperature, but for pressure as well.

A few things to check:

√ Check the oil screen for blockage by tin foil or oil caps

√ Remove the thermostatic valve for the oll cooler aid check foi proper operation

To increase oil pressure you need to remove washers - not add additional ones to the valve. But if this does not help, you should consider the possibility that the oil pump itself may be in need of attention.

Slightly lowering the vacuum may be of some help in lessening strain on vacuum instruments, but they were designed to operate at full rpm at the recommended vacuum - five inches is certainly the way to go.

It is normal for the vacuum to fall below five inches when your engine is idling - the vacuum regulator only begins to function when that level of vacuum is being produced, and a vacuum pump at idle commonly produces less than five inches.

Sincerely yours,
TERRY LEE ROGERS

Hinge Rods For Cherokee 140

One member recently needed to replace the hinge rods on his Cherokee 140 but could not determine the proper material or gauge. Piper, does supply the material, although the part itself does not show up in the parts manual

The material can be ordered as PIN 189-310. According to Rick Davis it only comes in six-foot lengths - this is the way Piper purchases it.

Wants Landing Gear Specs

Dear Terry,

I have a 1978 Turbo Arrow. Please tell me where I can find details about my landing gear:

1. What is allowable side movement in the main scissor links.

2. Nose gear trunnion up/down movement (currently has .025 inch)

3. Nose gear trunnion fore/aft movement (currently has .030 inch)

I have looked through my Hints & Tips but 1 cannot find anything specific enough. My mechanic says he cannot find the tolerances in any of his Piper manuals.

Any suggestions?

Sincerely yours,
Gary Manchester
Portland, OR 97225

Dear Gary,

The reason your mechanic cannot find specifications for the gear in the maintenance manuals is that Piper does not provide this information. Basically, you are limited in gear inspection to searching for defects in the casting itself, such as cracks, or for any signs of obvious misalignment or binding.

I contacted Piper for advice and their only response is to check with a Piper service center (Flightcraft is in Portland) for additional help - each center has a D.S.A. on staff who can hopefully provide guidance.

Sincerely yours,
TERRY LEE ROGERS

Auto Fuel & Percolation

by John Schreiber

Regarding previous comments on auto fuel, refer-,,,,, to "vapor lock" and leaning are very important. The thought that vapor lock will cause the engine to quit from fuel starvation is not entirely correct.

What is happening in this case is a phenomenon

known as fuel percolation. Liquid fuel, under pressure, is delivered to the float bowl of the carburetor and it boils violently once inside the bowl, pushing vapor and extra liquid fuel out of the bowl vent and venturi. Airplane engines are designed to use extra fuel for engine cooling and, as such, are close to the point of being too rich.

Any unmetered fuel added to the full-rich mixture will result in poor performance. All pilots need to know that leaning the mixture can produce more power. Try it instead of having an accident.

Interested in Back-up Vacuum

Miles C. Gerberding, of Fort Wayne, Indiana, asked what type of backup vacuum system was available for his Arrow. The answer:

Basically, there are two ways to go for backup power - using tlie vacuum from the engine intake manifold, or going to an electrically powered auxiliary vacuum pump.

The electric standby pump is a system which has been around for years. The auxiliary pump is mounted in-line with the engine-drive pump so you need only switch it on after detecting failure of tlie primary pump. The induction manifold system, on the other hand, requires some additional thought.

You activate the system by pulling out a knob which opens a valve that allows manifold pressure into the system. But you also need to reduce power to get enough vacuum to operate the gyro instruments. Because the engine needs to run at reduced power levels, this is definitely an emergency system only.

For an electric standby pump, contact Airbonie Division, Parker Hannifin Corp., 711 Taylor St., Elyria, OH 44036 or Pamco Industries, 7702 Geralayne Dr., Milwaukee, WI 53213 (414) 771-8792. Be prepared to spend in excess of $2,000 for tlie system.

A less-expensive alternative is the manifold vacuum system which should cost about one third the cost of an electric system. This system is manufactured by Precise Flight, P O Box 3375, Sun River, OR 97702.

Piper Distributor Listing

In many cases, Cherokee owners experiencing a problem with their planes are requested to contact their local distributor. Each has a full-time DSA on staff who is supposed to be able to handle most technical questions. But where are the distributors located.

The following is the current list (by state).

Aviation Wholesale Supply
2113 Merrill Field Drive
Anchorage, AK 99501 (907) 272-4397

Avex, Inc.
106 E Santa Marla St
Santa Paula, CA 93060 (805) 933-1328

Turbo West
10656 W. 120th Ave.
Broomfield, CO 80020 (303) 469-7372

Aviation Sales, Inc.
12260 E. Control Tower Road
Englewood, CO 80112 (303) 799-9999

Columbia Air Services Inc.
Groton-New Longon Airport
Groton, CT 06340 (203) 449-1257

AMR Combs
4050 SW 11th Terrace
Ft. Lauderdale, FL 33315 (305) 359-0000

Pensacola Aviation Center
P O Box 2781
Pensacola, FL 32513 (904) 434-0636

Sun Aviation, Inc.
P O Box E
Vero Beach, FL 32960 (407) 562-9257

Avsco Aviation Service
5125 Blalock Indust. Blvd
Atlanta, GA 30349 (404) 765-1871

Epps Air Service
Peachtree-Dekalb Airport
Atlanta, GA 30341 (404) 458-9851

Muncie Aviation Ce.
5201 North Walnut St.
P O Box 1169
Muncie, IN 47305 (317) 289-7141

Signature Flight Support
International Airport
P O Box 35033
Des Moines, IA 50315 (515) 285-4221

Kansas City Aviation Center
P O Box 1850
Olathe, KS 66061 (913) 782-0530

Sky Tech Inc.
701 Wilson Point Road
Baltimore, MD 21220 (410) 574-4144

Piper Sales East, Inc.
P O Box 708
Norwood, MA 02062 (617) 762-3500

AMR Combs
P O Box 888380

Grand Rapids, MI 49588 (616) 949-5000

Modern Aero, Inc.
14801 Pioneer Trail
Eden Prairie, MN 55347 (612) 941-2595

Av-Pac
P O Box 81887
Lincoln, NE 68501 (402) 475-4125

Flightcraft Inc.
7505 NE Airport Way
Portland, OK 97218 (503) 331-4200

Penn Jersey Piper Sales
3715 Sullivan Trail
Easton, PA 18042 (215) 258-6251

Cheyenne Air Center
325 Airport Road
Washington, PA 15301 (412) 228-6400

Brown Flying Service
1331 Northern Blvd.
San Antonio, TX 78216 (210) 824-7241

Intermountain Piper
237 N. 2370 West
Salt Lake City, UT 84116 (801) 322-1645

Plastic & Fiberglass Parts

By Terry Lee Rogers

A Piper Cherokee lands at a small airport. It is a good larding, but the speed is a little hot. As the pilot attempts to turn off at the second taxiway, he veers off the runway and clips a runway light with the left gear.

Very little damage is done except to the pilot's pride. But because of damage to the wheel pant, he will soon learn niore than he wanted to know about plastic and fiberglass repair.

Actually, most Cherokees have alot of parts which are referred to as "plastic" by many owners. Some of them really are plastic while others are fiberglass. Whether an item can be repaired at all depends upon what it is made of and also how much damage it sustained.

Let's take a look at some of the common Cherokee parts which may require repair or repla ement and see what can be done about them.

Plastic Items

Plastic items include wheel fairings, dorsal fin caps, wing tips, stabilator tips, and all interior plastic as supplied by Piper. The word on these items is simple: replace them. They are not realistically repairable.

You can take these items to your local Corvette or boat repair man, but simply putting fiberglass against the Piper plastic is not going to cure the problem. Fiberglass simply is not going to bond with the plastic.

One Ohio entrepreneur provides a two-part kit for repairing plastic for about $30. It may have some effect on new plastic, but it can do little to repair old plastic which has seen years of use. The underlying plastic remains brittle and breaks around the repair.

At least one pilot, seeking a quick and cheap cure, got his hands on some war surplus Devcon - a compound used by the Navy to repair fighters. The goop was applied liberally to a damaged wheel pant, but it soon cracked and came off in large sheets. In addition, the amount added was so great that the wheel pant was way overweight, with the weight concentrated in the tail end.

The pilot soon wondered why lie ended up with a bad nosewheel shimmy in addition to a continually deteriorating wheel pant. The reason - that Devcon not only failed to make a repair, it caused an out-of-balance condition.

So if a plastic part is damaged or just wears out, be prepared to purchase another one. You may replace it with an original plastic part or, in some cases, you may be able to replace it with an FAA-approved fiberglass part for the same price or even less.

Fiberglass

One man who knows his fiberglass is Kea Rickert, of Globe Fiberglass, in Lakeland, Florida. Globe, under Ken's direction, has gotten more FAA approvals on aftermarket parts than any other fiberglass supplier in the world. Globe has been around a long time and has an excellent reputation in the industry.

Globe supplies approximately 100 different Piper parts from its 2,000 foot production facility. Globe's prices are sometimes a little bit higher than other fiberglass suppliers, but all the company's products are FAA approved - something the competition cannot always say.

Sometimes the production gets a bit confused. For example, Globe has discovered Piper manufactured eight different designs for wheel pants over the years for the Cherokee. Piper also produced 12 different designs for wing tips.

"Sometimes even Piper does not know what they are dealing with," said Rickert.

When a fiberglass part is damaged a pilot needs to decide whether to repair or to replace it. Rickert estimates that 30 percent of damaged fiberglass parts can be repaired, while it is cost effective to replace the remaining 70 percent.

"Some parts are just not repairable," said Rickert. "The antimony trioxide used by Piper is flame retardant and it is cheap to manufacture, but the disadvantage is that when it is damaged you cannot just slap on a patch. It is like putting a Band-Aid on cancer."

As the Piper fiberglass parts age, they tend to wear out. They become brittle and crack just from normal wear. Although the damage is often not considered repairable, some items, such as nose bowls and engine cowlings, need to be repaired because the item is extremely expensive new or is just not available.

But when repairing such items, the person doing the repair work must be knowledgeable about what he is doing and must use the proper materials. Unfortunately, for most people, buying the proper chemicals is simply not possible.

For example, at Globe Fiberglass, products are made using Ashland 692TP25FR flame retardant resin and Hexcel 7532 bi-directional cloth. You cannot just go out aid buy a quart of resin and a few square feet of cloth. It comes in big rolls and in 50-gallon drums and is considered hazardous material so you cannot just put it in a package and ship it.

Or, you could try the Piper method and add antimony trioxide to regular resin. The problem is that you will end up having to buy the antimony trioxide in 50 pound bags - it is not available in small quantities.

Knowledge of working with fiberglassmay be hard to come by, too. Piper, for example, bas absolutely nothing in its manuals about how to repair fiberglass parts. The processes require too much skill on the part of the individual to try to teach him by letting him read a training manual,

And repair of engine cowlings are somewhat a grey area even to the FAA. Cowlings generally are considered non-structural items - only the Cessna 210 and the Bonanza cowlings are considered structural - all other plane cowlings are considered fairings. However, if a cowling breaks loose in tlight aid departs the plane, it may create a serious accident, especially if it goes through tlie windshield or strikes a wing or tail section.

Although Globe has done some repair of these items for customers, Rickert does not advertise this service and makes it clear to his customers that repaired parts can only he utilized by someone who has an IA able and willing to return tlie aircraft to service after installation of the repaired part.

What does it cost to do arepair'? For a damaged set of cowlings (upper aid lower), Ken estimates the cost of repair would be between $500 and $750, depending upon tlie condition. If a part is available, it might not cost much more new, from Globe, than having it repaired.

Globe keeps accurate records of pricing over tlie years and many of its current prices are actually lower than the sane part cost seven years ago. Approximately 80 percent of Glohe'sparts are priced lower than Piper parts, while 20 percent cost more than Piper's.

What are some specific problem areas involving Piper plastic and fiberglass parts? Below are listed some if the items which concern Cherokee owners:

Cowling Fasteners

Several Cherokees have had cowlings depart tlie aircraft in flight because of broken or worn fasteners. Generally, fasteners are items which may be purchased from any aircraft hardware supply company.

Pin plates, however, are items which need to come from a Piper dealer or distributor. And although the lower pin-plates on most cowlings are easily replaceable, the upper plates are generally bonded into the cowling. To make a proper repair you need to grind the old plates out, replace them, and then bond them back.

Many of the defective fasteners have gotten that way because of lack of proper inspection over the years. If a plane has been getting $200 "paper" annuals for a number ofyears, it is likely no one has examined the cowling integrity at all for quite some time.

Exhaust Burns

Some Cherokees run the exhaust pipe pretty close to the fiberglass cowling. it results in bubbled paint and burned areas on the cowling.

The only cure is to cut out the burned area and replace it with new material.

To solve the problem requires use of a heat shield. Globe uses a material known as Gentex to make the shields. but this material is not cheap - it costs $40 per square foot aid requires special handling. But Ken has found it to be the most effective material to prevent exhaust burns on cowlings.

Painting

Painting fiberglass is not much different than painting any other aircraft surface, according to Ken. No special preparation or tecliniques are required. It does help. however, if you start with a two-part primer, such as DuPont Kolar.

Interior Plastic

The thin plastic used by Piper (and others) for window frames and other interior trim becomes brittle with age aid cracks easily. It becomes unsightly and, unfoitunately. is not considered repairable. Some people have repaired it. but it soon cracks again. The material itself is worn out.

The good news is that it can now be replaced. Up until a few years ago no one made much of tlie trim available. Now you have two choices. Plane Parts Co., of Lawndale, California (310-542-1702) makes much of the trim in plastic, while Globe Fiberglass (800-899-2707) makes some of it in fiberglass (it is more durable. but, of course, more expensive.)

Wing Tip Tanks

Piper used wing tip tanks to hold auxiliary fuel on certain models of the PA-32, including the Cherokee Six, and on the Cherokee 235. The tanks were very useful in extending range, hut as time went on they developed a problem with the fiberglass delaminating inside the tanks.

Unfortunately, the tanks are no longer available from Piper.

When Piper built them they put about six coats of resin inside. There are reports today (based on mirror examination) of delamination on the inboard wall around the sump area. The owners are getting resin flecks inside tlie inboard tank wall. These flecks can block fuel system screens and can also clog carburetors and fuel injector nozzles if

they get that far into the system.

There are also reports that some have been repaired by hollowing out the inside tank cavity and applying several coats of gel coat inside. However it is not something to take lightly - if the job is not done well, it can result not only in bad tanks, but even in engine failure (due to contamination of the fuel system.)

Ken Rickert's frank recommendation is simply to disarm the tanks and be prepared to accept the lower range. Under no circumstances should sloshing compound be used to try to stop the problem.

Sticker Shock

Unfortunately, there is no free lunch, and this is certainly true with plastic and fiberglass parts. Although many aircraft owners are un-fazed when they shell out big bucks for such high tech items as avionics with lots of bells and whistles, they balk spending money for on fiberglass parts.

Globe Fiberglass sells Cherokee wheel pants for about $1,000 a set. This may seem high, but it is a quality product which will fit the aircraft and last for a long time. It would be possible to manufacture a product for a lot less with less quality and perhaps without any FAA approval - install it yourself at night while no one is watching and "forget" to put anything in the logbooks about the change. However, most people do not want to get involved in this kind of maintenance procedure on the plane they fly and Globe Fiberglass does not operate that way either.

Nonetheless, a few years ago there was little available in the way of plastic or fiberglass parts. Today there is competition and that is what makes it better for every aircraft owner concerned about keeping his plane in flyable condition.

Knots-2-U Ups Performance

by Bob Hechlinski

Like all members of the Cherokee Pilots' Association, I read each issue of the Piper Owners' Magazine from cover to cover when it arrives. I learn a lot from the other owners' experiences in POM. I just recently had a pleasant surprise with my 180C that I want to share with you and the members.

We just installed a full complement of gap seals from Knots-2-U. These included seals for the stabilator, ailerons and flaps. Also installed were the six pieces ofspecial flap hinge fairing. The results were impressive. In order of increasing benefits, they are:

1) There was an increase in overall speed. The best I can calculate is about four to five knots, but this is the least of the improvements.

2) There are some Cherokee pilots who claim that Hershey-bar wing Cherokees roll like a fat dog. Adding the new fairings has changed this markedly. The feel is much more responsive and controllable than ever before.

3) There is significant control authority improvement during approaches and landings. The airplane feels much firmer during landings. Tracking the centerline during final is much more accurate now even in squirrelly cross winds. Our 29-year-old Cherokee is behaving more like an Archernow.

4) The most improved aspect of the streamlining has to be the rate-of-climb. The airplane now climbs like the proverbial homesick angel! Even on hot, sticky days, I can typically reach pattern altitude by the end of the runway. We generally fly with full fuel and two people. The new and improved climb has become a fun thing to do; I look forward to it! As you well know, this really says something for the short Cherokee 180 that has always been a nose-heavy rascal!

The seals are of very high quality. I especially like the stabilator installation. Jim Bradshaw is to be congratulated for his high quality products and his approach to customer satisfaction. I had a number of self-inflicted wounds and he helped me out quickly and in the most friendly fashion. When Mr. Bradshaw develops additional mods (like a new engine cowling for the early Cherokees), I will be the first in line to place an order.

Nose Gear AD On Piper Arrow

Arrow owners received an unwelcome surprise in August with the publication of AD 94-14-14 requiring modification of the nose-gear on numerous Piper aircraft - particularly Arrows.

The AD became effective on August 16 and, according to FAA estimates, affected 6,888 aircraft at a cost per plane of $382. This cost includes the cost of pans ($52) and an estimate of six hours of shop time at $55 per hour.

The AD requires the modification of the nose gear by installation on the Arrow of Piper PIN 764-377 which strengthens the nose gear to prevent nose gear collapse "which could lead to airplane damage."

The kit consists of a close tolerance bolt, four bearings and associated hardware for installation of these parts on the draglink assembly.

Compliance is required within 100 hours of operation after the effective date of the AD.

Planes which are affected are the PA-28R-180 S/N 28R-3004 through 28R-7130013; PA-28R-200, S/N 28R-35001 through 28R-7635545; PA-28R-201, S/N 28R-7737001 through 28R-7837317; PA-28R-201T, S/N 28R-7703001 through 28R-7803373; PA-28RT-201, SIN 28R-7918001 through 28R-8218003; PA-28RT-201T, SIN 7931001 through 28R-8231009.

Master Switch Remains Active

Dear Terry,

We have a question about our master switch which we have never seen discussed in POM, so I'll run it by you.

We own a 1969 Cherokee 180. The master switch is the usual red split switch with battery on the left and alternator on the right. I have always flipped both sides of the switch on and off at the same time. Some time ago the switch

started to be "slow" in turning off.

In shutting down after flight we turn off the radios, strobes, transponder, etc. and lean the mixture to idle cut-off. The engine quits. Then we turn the master switch off, but nothing happens for four or five seconds. Then we hear the click of a relay closing from behind the baggage compartment bulkhead where the battery is located and the rest of the electrical system shuts down as it should have when the master switch was turned off.

Our mechanic said that some electrical component was keeping the relay charged and keeping it from closing. As the master switch is really a safety device for shutting down a malfunctioning electrical system in flight, do you have any suggestions as to why it may not be working? Thanks. We read POM every month and enjoy it.

Sincerely yours,
Geoffrey J. Arnold
Boise, ID 83703

Dear Geoffrey,

If you check out the schematic for your aircraft you will note that the circuit for the master solenoid is very simple - the battery (and alternator) feed into one side of the energizer coil and the other side proceeds to the main side of the master where it is then grounded.

Other than the wiring, the only two places there can be aproblem are in the solenoid or the master switch. If either component gives a partial ground to the solenoid coil, it will pemiit the solenoid to stick or remain energized even if the master switch is physically in the open position.

Your mechanic should check the voltage at the ground side of the relay coil. It should read battery (or alternator) voltage - 12 to 14 volts - when the master switch is open. If it indicates less, than there is a partial short in the master relay or master switch.

In some planes there is one more component to consider - those planes with an auxiliary power receptacle. These planes have an additional relay which is wired in parallel with the master relay and may also induce feedback into the circuit.

Return to Keeping the Belly Clean

by Joe Datres

There has been a lot of discussion on cleaning the oil off the belly. I would like to add one more idea to the pot. I have used mineral spirits for years for this job. It is easy, quick, and doesn't cost very much!

Mineral spirits is basically what is sold in auto departments, labeled as Tar Remover, for a lot of money for a very small can. OR, in paint stores labeled as paint thinner (it usually says on the can it is mineral spirits).

In a discount paint or lumber supply store you can usually get a gallon for about $2. It is plenty safe enough to work with and only mildly flammable.

Just take an old rag and moisten with the mineral spirits and wipe off the oil and dirt. I usually go over it once, quickly and then another quick pass with a clean rag (and more mineral spirits) to complete the job. Just let it air dry and it is done in only a few minutes.

Another Source of Backup Vacuum

by Alvin M. Younger Jr.

I just wanted to follow up on a reader response in the August issue. On page 20, you pointed a reader towards a couple of options on electric standby vacuum pumps. I would like to add another name to your list: Aerosafe Corporation, Route 1, Box 289, Milsap, TX 76066 (800) 433-5689.1 am extremely satisfied with the Guardian I vacuum unit for my Dakota. Additionally, the service support from Aerosafe could not be improved upon.

EGT Reading Getting Higher

Dear Terry,

The EGT (Mixture Monitor'?) in tny 1967 Arrow used to read about three quarter scale at optimum mixture setting. Over the years it has drifted so that the optimum seems to be a little past full scale. Is there a calibration procedure, or is the problem solved by buying a new part?

Also, in Hints & Tips I noticed several articles on replacing side windows. Are PA-28R-180 windows also "flat" so my local plastics shop can reproduce them.

Sincerely Yours,
John Stettler
Whinier, CA 90603

Dear John,

The EGT used by Piper was an Alcor unit which is adjustable via a potentiometer screw accessible after removing a plastic plug from the rear of the gage case.

You should be able to adjust the unit to get the needle back into the meter scale. If you run into problems, you should contact the folks at Alcor (12043 Colwick, San Antonio, TX 78216 210-349-6491 or 800-354-7233.

The side windows in your plane are basically the same as those in all other PA-28 models. They do have a slight curve, but you utilize flat plastic which then acquires the curvature of the mount when they are installed.

Wants to Know Service Ceiling

Dear Terry,

Perhaps you can help us with one question. Whenever we see statistics on any airplane, "service ceiling" is usually included. We do not know what the service ceiling is on our airplane, a 1979 Cherokee 6 300. We have been all through the manual and cannot even find any mention of the words "service ceiling." What gives!

Our engine is an IO-540-K1G5.

Sincerely yours,
Morton Lessans
Chevy Chase, MD 20815

Dear Morton,

The service ceiling on your aircraft, like all aircraft, varies by weight. Piper published service ceiling specifications for your airplane at two different gross weights. They are as follows: 3,400 pounds, 16,250 feet; 2,900

pounds, 20,000 feet. The absolute ceilings for the aircraft at these two weights was published as 18,000 feet and 21,500 feet, respectively.

The published figures were actually obtained by Piper by utilizing the performance graphs for the aircraft.

Emergency Procedure -Additional Comments

by Lee Hunter

I would offer a couple of comments on the emergency procedure information supplied by Donald Renner:

(1) don't switch to 121.5 if you are already in communication with an ATC facility. Advise the controller of your problem. He has your location and can relay your flight path to search crews.

(2) It is correct to establish best glide speed, but I would not have stated a specific speed since it varies with aircraft weight. I seem to remember that 85 mph was best glide at gross weight in a 140.

(3) I am not sure at what point I would do a complete engine shutdown (I have read too many cases of engines restarting just when all seemed lost!) Altitude remaining would be the deciding factor. As part of the procedure, I would turn the fuel valve off as well as setting the mixture to idle-cutoff.

If the engine-out occurs on a moonless night over sparsely settled terrain, there are two additional steps you might consider:

(1) When close to anticipated touchdown, turn landing light ON.

(2) If you don't like what you see, turn landing light OFF.

Working on 235 Oil Temp & Pressure

by Edward Murphy

Thanks for the information on the oil pressure and oil temperature problem on my 1972 235. After hearing from you I went ahead and contacted Lycoming. They confirmed your advice that washers are added to the oil pressure relief valve to increase pressure, not deleted. They also suggested I add a heavier spring. The part is on order.

I have heard from one other 1972 235 owner who has the exact same problem. He has tried most of the suggested cures at one time or another since he has owned his plane beginning in 1980 and none have worked.

Since there were only 23 of these planes made in 1972 I'd sure like to hear from anyone who knows the whereabouts or final status of the other 21. I'd like to exchange information about engine performance, paint schemes and other details about this wonderful plane. Information from Piper is, at best, sketchy.

Three-Blade Prop, Tach, Manual Prop

by Mike Stevens

I wanted to tell about two items I have installed on my plane.

The first item is a three-blade Black Mac prop from McCauley. I now have about 150 hours on it and am very happy with it. The best thing about the prop is that I still have not had to file any nicks out of it yet!

The airport I keep the plane at has a gravel taxiway and a grass runway. The prop has not changed cruise or climb noticeably. The prop sounds different, but interior noise level seems to be about the same. The prop did add about 13 pounds right on the nose of the plane. The worst thing about the prop is the longer spinner. The standard tow bar is now too short to move the plane around without holding on to the base of a blade.

The second item is a digital tachometer from Horizon Instruments. It works great. Determining preflight mag drop is just a matter of reading the number on the tach. Setting and monitoring the exact rpm for cruise is easy. The display is just slow enough to give a good indication of rpm without displaying 8's.

And one final item - I just got back from Oshkosh. The representative for Avia-Hamilton Standard Aviation told me that the new prop they advertise for the C-172 is being tested on the Cherokee line (mechanically adjustable variable-pitch prop.) The prop on the C-172 weighs 60 pounds.

Case of the Leaky Studs

by Don McGohan

I read with interest the recent article about oil and fuel leaks because I was experiencing an aggravating oil leak at the time. However, the source turned out to be different from any mentioned in the article.

I have a 1967 PA-32-300. The leak was coming from the port side of the engine around the area of the middle cylinder. My mechanic replaced the oil return lines for all three cylinders on that side, cleaned up the engine, ran it, but no good - it still leaked. It was obvious that the leak wasn't coming from anything at the front of the engine, because all that area was clean. Next he tightened all the cylinder bolts - still leaking.

It was time to get serious, so the next step was to remove the offending cylinder, check all seals, look for any other problems and try again. It still leaked!

Keep in mind that this process involved taking off and reinstalling the exhaust system and other parts several times while the mechanic tried different solutions.

Finally, it was decided that the leak was coming from the bolts (studs) that hold the cylinder in place, since they go through the case into the interior of the engine. A call to an engine re-builder brought the suggestion to try putting 0-rings at the base of the studs and reinstalling the cylinder. We were told that if this didn't work, we were looking at a major tear-down (not a happy prospect!)

Although quite a few hours of shop time were run up (along with a pretty hefty bill), I am happy to be able to report that this solution seems to have worked - the leak has stopped.

Maybe if some other reader has this problem it will work for them.

Lycoming Literature Keeps Owners Informed

At least a few Cherokee owners were surprised and upset when they received a letter from Textron-Lycoming listing the service bulletins, service instructions and service letters applicable to their engines.

They were among 37,455 owners of 0-, 10, and AI0-360 engines who received the 12-page letters compiling the service literature which may or may not apply to their engines.

The reaction to the letters has been mixed, according to Marian L. Folk, technical design coordinator for the engine division.

"We have had those who love it and those who hate it' she said.

"The intent was simply to encourage owners to take an interest in the maintenance of their airplanes, she said. "Most owners do not do their own maintenance. We wanted to make them aware of what publications apply."

Although many plane owners simply turn their aircraft over to maintenance shops to have work done, their shops should have access to the publications listed by Lycoming. Unfortunately, some do not.

"Maintenance shops need access to literature to maintain any engines they are licensed to maintain - not just Lycoming engines," said Folk.

"If this letter causes one maintenance facility to purchase a *subscription* and get the *material* they *need* to properly service the aircraft they are working on, then the letter has done its job, she added.

Lycoming intends to send similar letters to the owners of all their engines. Many who received the 0-320 letter indicated they no longer own the planes listed on tlie FAA roster, but they have upgraded. Many want to know whether they can get similar letters for their new planes.

According to folk, after all the 0-320 letters have been sent out tlie company will prepare them for 0-360 engines. Others will come along as they can be prepared and mailed.

"We intend to cover all of our engines," she said.

According to Folk, the letter is broken up so it can be used in conjunction with service publications. Lycoming does not intend the letter to cause additional expense to aircraft owners.

"If maintenance has been perfonned in a timely manner by a reputable company, the letter should not require any action on an owner's part." she said. "All this is, realistically, is an attempt to notify owners of what publications are out there and what may or may not affect their engines.

"There is nothing in tlie letter which is mandatory. We merely recommend that tlie owner check with the person doing the maintenance.

"We don't want anyone to land except for the reason that this is where they want to be."

Curtains & Engine Questions on 180

I am the proud owner of a 1968 model Cherokee 180. It is fairly low time (2,600 hours) with a mid-time engine (700 hours) in need of paint.

1 have several questions. After researching speed kits and reading back issues I feel 1 have a handle on the different offerings, but my questions are of a different nature:

1. Where can I obtain a polished metal spinner for my 180?

2. Where can I obtain curtains and tracks similar to those used in the later model Archers and Arrows?

3. What is the merit of going to a 200 hp IO-360 with constant speed two-or three blade prop (the Arrow 200) at rebuild in the future?

4. If going to the above, would long-range tanks be a consideration?

5. In reference to question three, why not upgrade to 235 hp?

6. Oil consumption is approximately one quart in two to four hours; is that acceptable?

Gary Edwards
Independence, MO 64055

Dear Gary,

The only sources for polished spinners are Piper Aircraft or one of the salvage yards. It might be possible to purchase one from an aftermarket supplier, such as Wag Aero, but when doing so you must be careful that any such spinner is designed for your plane and comes with appropriate FAA/PMA paperwork.

Spinners have been a major problem for Cherokee owners - they and their bulkheads are susceptible to damage, especially when subjected to stress during ground maneuvering of the planes (those spinners are not convenient handle holds.) They are also expensive and hard to come by. Many owners have gone to composite spinners, as offered by TCB Composite Co. (ad on page 26) to avoid these problems.

Curtains are not commercially available. although you may be able to modify tracks from Piper to fit your plane. Most people have their curtains made to order by someone very good at sewing.

The questions conceniing engine conversion are easy to answer: there is no STC for any conversions to a higher-horsepower engine or for any longer range tanks. It might be possible to get FAA approval, but the last person I know who did so spent nearly $22.000 just on engineering work to get it approved by the FAA. Believe me, these are not just bolt-on conversions.

As covered in last month's magazine, the oil consuniption of your engine, although nothing to write home about, is acceptable, at least according to the limits set by Lycoming.

Can Panel Be Re-Done?

Ron Mathews, of Sherman Oaks, California, asked about replacing or modifying his instrument panel on his early 235 to a modern "T" configuration. His answer:

A panel can be modified, but it is a time-consuming and expensive proposition.

Recently, Light Plane Maintenance magazine ran a two-part series by an older Mooney owner who completed just such a modification. Some of his observations:

√ An instrument panel has scads of wiring and tubing behind it - it is a nightmare to work on and requires a lot of time and diligence to complete the detail work.

√ Finding a mechanic who will tackle the project is a job in itself. Most mechanics have a lot of work coming in and they do not have the time or energy to spend on a project which may take in excess of a hundred hours of shop time.

√ Design time is a lot greater than you might think - it requires not only fitting items to the panel but insuring that brackets and hardware mate together properly when the installation is to begin.

√ An inexperienced installer may quote a lower price than one who knows what a job will take, but you will end up paying more in the long run if you try to get a low-ball quote to complete the job.

√ Be prepared for a lot of downtime. The Mooney project took nearly three months to install a new panel even though the parts had already been prefabricated.

√ Do not even considering modification unless you can get some cooperation from the FAA early on. The Mooney project nearly ended up without approval even after the completed installation was finished.

√ Due to the comolexitv of the project, it is quite possible that some parts of an installation will not work properly aid require reworking later on

Of course, the Mooney installation involved a complete redesign of the panel. With less involved, an installation would involve correspondingly less hassle. But any panel redesign is a major project and it should be approached that way. Most people with older planes learn to live with nonstandard panel layouts because of the money and time involved.

Wants To Fix Interior, Panel

Dear Terry,

I am enjoying my 1963 Cherokee 180. During last winter tlie dash became cold and brittle. Unfortunately, it has begun to crack and split in a couple of places.

Can you guide me in helping to find information on how I might recover the dash area? Reupholstering seats and side panels is another improvement I am hoping to make soon. Should these all be done at the same time?

Sincerely yours,
Randy Herrop
Douglas, WY 82633

Dear Randy,

Although "Royalite" plastic overlays are available from Piper for later model Cherokees, the early models, with the nonstandard instrument configurations, are out of production.

Your choices theo are to repair the panel you currently have, to replace it with a custom panel, or to seek a panel from a salvage yard.

It is possible to repair the plastic, although it will never look like new. Repair consists ofremoving and cleaning the panel and using fiberglass tape and two-part epoxy glue applied to the back side of the panel around the crack.

A custom designed hardwood panel is available from Pfluger's Custom Hardwood Aircraft Panels at the Rio Vista Airport, Rio Vista, California (707) 374-4359. Although the panels are beautiful, they obviously are not cheap.

A final option, assuming your panel is so far gone it is not worth saving, is to try to find an early-model panel from one of the salvage yards (such as Wentworth - see back cover). Of course, any panel you buy will have quite a few years on it and it may need repair before it can be used.

Seat and side panel upholstery is the province of Airtex Products. 215-205-4115. For $3 they can send you not only their catalog but an actual sample of fabrics and materials available.

My suggestion is to do one job at a time, rather than trying to do it all at once. That way, you are more likely to take tlie time to work carefully. Cutting and fitting and detail work are important when doing interior work and you do not want to be rushed by the shear volume of work you need to accomplish at one sitting.

Use Only Piper A/C & Alt Belts

by Thomas P. Bowen

In a recent issue a reader suggested one could save money by ordering A/C and alternator belts direct from Gates bypassing the Piper parts system and saving money. The reader noted that the Gates industrial belt, 7M 1030 Polyflex was a direct replacement for the Piper Part # 452-823 alternator belt. I ordered the belt from Gates and upon receipt the belt looked identical. vet it iust didn't feel right.

I didn't pay much for tlie best so 1 cut it apart and, wonders of wonders, there was almost no reinforcement cord within tlie belt.

The four-year old belt on my Challenger was packed with reinforcing cord. (I bad removed it, but it hadn't failed after four years in service.)

In this instance, it would seem prudent to stick to the Piper part irrespective of cost.

creating a "Cherry Key"

By Sterling Brooks

Okay, I confess to being the mystery writer of last year's article entitled "Hazards of Hasty Piper Purchase."

The purchase was indeed hasty and the aircraft was a bowser, hut nearly two years and thousands of dollars later, I am calling my 140 a "Cheny-Key" and not a dog.

My 140 just went through an $11,000 renovation. In bringing my Cherokee up to snuff I learned many things along the way and will submit articles about an IFR Freedom-Cerminil top overhaul, new Airtex interior, leather seats and the resultant burn-test needed to comply with the FARs.

I also installed new Met-Co-Aire wing tips, Knots-2-U wing root mods, King loran, and a Garmin GPS, as well as all new tinted glass (from Knots-2-U) and copper cables from American Aviation, new Slick magnetos, new fuel-pump, new oil and fuel hoses, and some repainting, to boot, as well as sound proofing. I also had great success with a wonderful rubber door seal that survived the dreaded "garden hose test" and has reduced interior wind noise.

Other repairs include a fix for split foam-pads on the older seat bottoms, repairing cracks in the plastic instrument panel face and the installation of a Lycoming full-flow oil filter with rare-earth magnets Io capture and hold ferrous metals. THE RARE EARTH MAGNETS ARE AMAZING!

Don't even think of using Bondo to fix hail damage! Bondo might be good for your '78 Chevy, but not for your Cherokee! I found an aircraft grade product this year that is vastly superior, won't shrink and is easy to work with.

Although the Cherokee is flying again, and flying great, I am not finished yet. In a few weeks I will be installing Laminar Flow speed mods. Will these mods work as advertised and will my former dog turn into a greyhound? I'll report my findings and submit photos showing some of the installation procedure.

Up to this point in time, 1 can say that I am very satisfied with all companies I have purchased parts from that advertise in the Piper Owners' Magazine. As an experienced experimental aircraft builder, I will also recommend other vendors that have treated me fairly on both avionics and parts purchases.

Back to the Future

Fortunately for me, my dad is a crackerjack mechanic, a retired jet jockey, and still holds an A&P. Working under his supervision and with the skills I previously had in building mv last airplane. I was able to shave off an estimated $6,000 in labor costs during my nine-month Cherokee rehabilitation.

I will admit to a few problems along the way, one of which is a running dispute with Piper Aircraft over a windshield collar. More on that later.

New parts for any type-certificated aircraft come rather expensively these days and Piper is especially proud of their parts, but I am willing to pay the piper (pardon the pun) in order to keep my airplane in tip-top shape.

MY dad and I checked the propeller tracking on mv Cherokee and found a 1/8 inch discrepancy when measuring the tips of the blade during the tracking test. He wasn't satisfied and would only sign-off on something less than 1/16 inch.

Prop track is easily checked by using a few large spring-type clamps and attaching a bar or wooden dowel from the scissors on the nose gear leg, going forward to meet a point at the prop tip.

Remove one spark plug from each cylinder and rotate one blade of the prop to a point where the very tip of the trailing edge meets the wooden dowel. Then spin the next blade down and see where it meets. If it is more than 1/16 inch off, you could be experiencing engine vibration, such as I did. Engine vibration translates into stress on bearings which can mean shorter engine life.

When we further looked into the tracking problem, we discovered bidden horrors lurking beneath the prop spinner. Someone has installed the wrong washers on the prop bolts.

I eventually learned that my Cherokee needed many new parts in addition to new prop bolt washers. I also needed a new forward propeller spinner bulkhead that was damaged by the incorrect washers. The bulkhead cost about $70, but the prop-bolt washers were outlandishly expensive. Piper's price for new washers for the propeller bolts listed at $48 each, and a Cherokee 140 needs six total. Yes, my friends, $48 for a single washer! I wasn't ready to spend nearly $300 for six tiny washers!

I was lucky to eventually locate Air Parts of Lock Haven (800) 772-3117, where I found the best deal. The incredibly expensive washers, part number 80122-55, are a little smaller than a quarter and much thinner than a very old dime.

In talking to George at Air Parts of Lock Haven, I found him to be helpful and knowledgeable. He discounted the washers to $21 each, for a grand total of $126, saving me $162 over Piper's "asking price."

I don't know who installed the wrong, smaller-diameter prop-bolt washers, but they "dug" into the soft aluminum forward spinner bulkhead. I suspect that incorrect torque contributed heavily to the damage.

A damaged or warped bulkhead can easily contribute to engine stress, believe it or not, and excessive vibration can place an extra burden on the forward crankshaft bearing. $126 for correct washers is cheap insurance to insure long bearing life. Splitting the case to repair a crankshaft or bearing is an expensive and time-consuming process.

(Side note; my father was the pilot of a brand-new Cessna 421 in the 1960's in which a prop completely departed the aircraft during a ferry flight. All 421s were grounded as a result until a cause could be found. The cause: soft bolt washers which deteriorated to the point that the prop bolts loosened.)

Cherokee Hints & Tips

After removing my spinner and propcllcr and checking my Cherokee's prop-flange witli a micrometer, everything looked fine. After installing the new washers and spinner, the propeller track worked out to about 1/32 of an inch and resulted in a much smoother running aircraft.

The installation of all-new tinted glass from Knots-2-U was easier than I expected and priced very fairly. It was a satisfying installation espcricncc and resulted in a remarkable cosmetic and functional improvement. If you decide to do this. bear in mind that it must be done under the supervision of an A&P mechanic. Also note that during windshicld replacement, tlicrc is no better time to replace the rotted or faded glare-shicld material No way would I attempt to do this with the windshield in.

The low-point in my nine month Clicrokee restoration came with the purchase of a new right-side windshield collar. The original right-side collar (see photo) suffered a fcw too many nicks and scratches over previous years and through several windshield installations in tlie past. I decided to fork over nearly $80 and ordered a new collar

The product that came to me is promoted by Pipcr as a "one-size fits all" part that tlic factory says will fit most Clicrokees. (Sounds like Piper took a marketing approach that hosiery makers made famous).

I. along with my dad and another A&P mechanic bclicvc that Pipcr either sent tlie wrong part, or is trying to pull a fast one witli owners of older Cherokees. Piper will not admit to error nor have they expressed any intcrcst in having me send the part back for verification.

The "one size fits all" collar will in no way bend along the lower radius of the windshield without creating a scvcre buckle from a point about 13 inches from the trailing end, as seen in plioto 2. In addition. the new part is nearly a half-inch wider than the original part. As a result. even if tlic part could be made to fit the turning radius, there is an ugly half-inch uneven union where tlic new part meets the sister part from the other side at the front center windshield support.

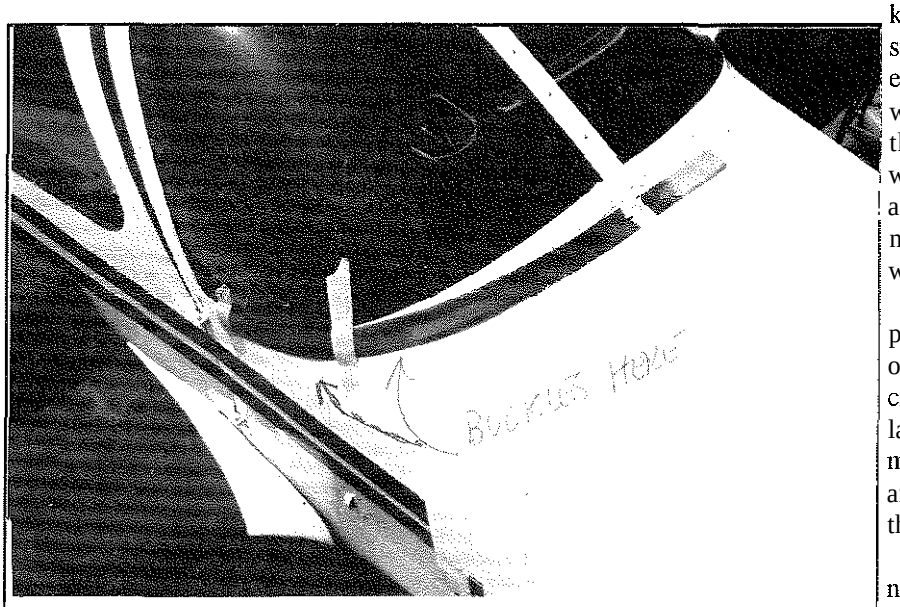

New Collar Buckled When Installed on Plane

Lastly, the part is about seven inches too long, but this problem can be eliminated by trimming with aviation snips. The half inch width problem cannot be rcctilicd by trimming. No craftsman in the world could trim the entire length of tlic collar and make it match the other side. And 1 am confident tliat no A&P mechanic can make tliis collar fit without distortion along the lower radius of the windshield.

My warning and lesson to anyone replacing windshields... if you need a new windshicld collar. contact Wentworth Aircraft for a used part. I have purchased uscd pans from them and am very pleased with not only their pans, but their attitude.

Next up... service bulletins complied with, including the Piper headlight-air filter mod, spar-wing attach plates, and the really scary Lycoming prop-sludge horror (easier to check and comply with than it sounds, but jeeze, you should see the goo that lurks in your crankshaft near tlic prop hub!)

The Interior

A twenty six year old Chcrokcc is usually a candidate for a number of cosmetic upgrades and my Chcrokcc 140 was certainly overdue for a new interior. Fortunately, the headliner was in good shape, but tlie side panels and seat covers were terrible.

At some point in the last decade or so sonicone had installed cheap, automobile-grade black carpet in the Cherokee. The black carpet looked terrible since tlie interior was done in brown earth-tones and burnt orange. There was no indication in the log books when the carpet was installed. but it certainly wasn't FAR certified-grade carpet. I put a match to some scrap carpet and it ignited like rocket fuel. No way this stuff would pass an FAA burn test.

After removing the scats the carpet was rcniovcd from the floor. Some of it was glued down and it was a big chore cleaning off the old glue. Thick layers of original pressed cardboard material was under much of the carper area and had deteriorated to the point that it flaked badly when touching it.

I removed all old material and finally had to use acetone to clean old adliesivc from the interior aluminum floor panels. I couldn't find a sourcc for the pressed-cardboard, but found something even better to be uscd as floor and wall soundproofing.

Aircraft Spruce and Specialty Company (800-824-1930) had been a good source for building supplies when 1 built my kit plane a few years ago. They offered a closed-

cell insulation material, FAR certified, and it was perfect for soundproofing my Cherokee's cabin. (See page 235 of their 1994-95 catalog, part number 09-42720). It comes in thicknesses from 1/4 inch up to one inch.

This material replaced all the old cardboard and fiberglass insulation I could remove from the floor, side walls and door. It easily glues to aluminum with Ptibond adhesive.

I purchased premium all-fabric side walls, new carpet and five yards of seat vinyl material from Airtex Interiors (a POM advertiser). Some trimming was needed to make the side walls and carpet fit, but it was certainly worth the effort. The final installation looks first class and much better than the original items ever looked when new.

I wanted to do my seats in leather and when I called several shops that specialize in aircraft upholstery, 1 was astounded how much shops wanted to cover four tiny Cherokee seats. Most quotes were around $3,500 to $4,500 and this was if I removed the seats and shipped them to their shop.

I elected to use a local upholstery shop which didn't mind the fact that I was supplying my own vinyl. He understood the need to use aircraft-grade materials and was able to find and buy leather that matched the color of my Airtex vinyl.

When using non-certified upholstery materials such as leather, the FAA will require that the material he tested with a horizontal bum test as per CAR Part 3, Advisory Circular of August 20, 1984, AC No. 23-2. Sounds like a bureaucratic nightmare, but actually it is no big deal.

If you want a sample test, contact your area Flight Standard District Office for information on labs in your area. If you cannot find a lab in your area, try International Textile Center on the campus of Texas Tech University in Lubbock (806-747-3790). My tests were done by R. D. Mehta, Ph.D. This FAA approved lab requires three samples about 13 by 4 inches. It charges a $45 fee.

My seat tops are now covered in leather and the sides and backs are done in vinyl. This type of covering is called "leather match in the upholstery business. It offers all the comfort of leather at a fraction of the cost of full leather. I can assure you that the comfort is superior over my old fabric seat covers and I sweat less on warm days.

If you are interested in having leather seats in your own Cherokee, you will need about four yards of Airtex vinyl and one full leather cowhide. The hide cost me about $350 through my upholsterer. Total cost of all materials and labor for the seats came to about $900 and this included rebuild of a foam-seat bottom. The old bottoms were split from front to rear and made for a rather low ride in the seats. My seats had a black rubber membrane under the foam and attached to the frame seat bottom much like a trampoline.

I couldn't find replacements so my upholsterer made repairs by installing new seat bottom webbing on the seat frame. I repaired the split cushion by applying a generous amount of clear silicone adhesive in the crack and allowing it to cure for a few days.

Next came repairs to the plastic instrument panel face. My 26-year-old panel had a number of cracks and holes that needed fixing.

After removing the panel I cleaned all surfaces with MEK (Keytone). Areas near cracks and holes were sanded with 80 grade sandpaper, then wiped down with acetone. When using either acetone or ketone, be careful. These cleaners will easily clean too much material off of the plastic. Use chemical resistant gloves unless you don't mind getting your fingers jet-black. Also, watch out for ignition sources. Ketone is an extremely flammable solvent, but an excellent cleaning agent. Ketone is also on the "endangered species list" because it is so volatile it is getting hard to find.

Next I applied a two-part epoxy paste to the backside of the panel where I found cracks and holes. Use a good quality tape on all cracks and holes. Tape the front of the panel and apply paste on the backside. The tape prevents the paste from protruding through the front and also helps to align the lip of the panel to nearly original alignment.

I had several large holes in the areas where screws hold the face to the aluminum panel. Previous owners had simply settled on using very large washers to hold and cover the enlarged boles. In many cases, the holes were so large I had to glue in small, dime-sized aluminum washers over the worn-out holes before applying epoxy paste to each hole.

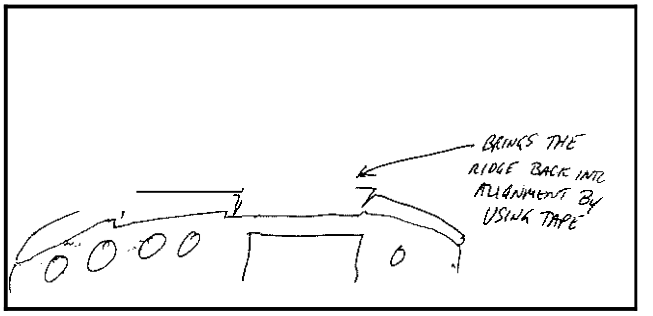

After allowing to cure for a few days, I injected YB Weld into the front of the face in all cracks and areas where I attached aluminum washers, using a large veterinary hypodermic needle (I'm talking elephant grade!) Seriously, I'm not sure what size the needle was, I just went to my local ag-vet supply house and bought the biggest specimen I could find. The needle is a trick I learned from my experimental airplane building days. It allows you to apply glue to areas that are hard to reach or where you need precision in application.

After curing for a few more days, I drilled out new holes where the original attach screws would go and sanded places where some residual epoxy paste and JB Weld had seeped out. After cleaning with regular alcohol. I painted the top and lip of the panel with Krylon ultra flat black spray paint. This paint is getting hard to find, hut ultra-flat black is usually available at good suppliers of automotive paint. It is deeper than regular flat black and it holds up well on plastic.

The plastic panel face was painted medium gray using a paint formulated for spraying on plastic. The fin-

ished product makes the panel look like something commonly seen on aircraft produced in the 1990s. I especially like the nice, styling contrast between the black instrument faces and gray panel.

One note on my panel upgrade: I upgraded the avionics prior to repairing the panel. The best time to do this is when you have pulled all the seats out of the plane because you need to lay on your back and took up under the panel. A small folding camp stool is helpful when you actually need to sit in front of the panel. The camp stool makes this work "user friendly"

My Cherokee now sports digital Terra avionics to include flip-flop navcom and transponder. It also has a King KLN-88 loran that makes some GPS units Iook anemic. The KLN-88 was a $5,995 hot-rod a few years ago, and now you can find them for $995 from J. A. Avionics, a very helpful and reputable dealer (800-323-5966.)

The KLN-88 has more functions than I'll evcr need, but I really benefit from a CRT lube that is easy to see in the strongest sunlight or darkest night. It also has a nifty pseudo moving map that is handy in keeping on track to my final destination. It also tells me all the flight service station and center frequencies.

A new PAI-700 compass was added as well as a panel mounted external temperature gauge. The old gauge protruding through the windshield was difficult to view with bifocal glasses and I suspect created measurable aerodynamic drag. The new temperature gauge has a small belly-mounted sensor about the size of a tip of a lead pencil.

Tlic Cherokee also has a Garmin GPS 90 that fits neatly on the left yoke and works fabulously with the small-attached standard anlenna. The LCD display is Easy to see, amazingly full featured, and runs for about 14 hours on batteries. If I should evcr lose panel power, I have a nice, independent backup navigation device. One caveat about the GPS 90: on days colder than 45 degrees, the display is difficult to see until the interior of the cockpit warms. Night illumination is very good, giving a pleasing blue-green glow that is easy on the eyes. The Garmin shows altitude, runway diagrams and more, and is a really great asset for the cross-country Cherokee driver

If your panel-mounted windup 8-day clock is not working (like mine), do not throw it away and replace it with a modern digital clock. These clocks are worth a mint - up to $800 for a new one, and I am not talking about what Piper Aircraft Charges. If ever there were a Rolex of airplane installed clocks, many Cherokees have them and owncrs have no idea of their value.

Since minc wasn't working, I took it to a Rolcx repairman. Hc almost salivated when he set eyes on it and I explained how I wanted it cleaned and repaired.

I knew good and well that if I told him it was out of my airplane he would probably charge me twice what the repair was worth. I think we all know the stigma that comes with airplanc ownership - everyone tliinks we have money lo burn. The opposite is usually true - I'm poor because I own an airplane, not rich.

I told the repairman I bought this funny looking clock at a garage sale and just wanted it for a desk-clock at work. He knew enough about this Cherokee clock to say it was a precision time piece usually found in tanks and airplanes. The final repair bill came to $65 and now I have a collector's item back in the panel that keeps accurate time.

Laminar Flow Speed Mods

My first airplane was a 1979 Piper Tomahawk. It was a great little ship and sewed me well, but when I eventually purchased my Cherokee 140, 1 knew I was getting a more impressive looking airplane and I thought I was going to be able to fly faster. I was greatly disappointed in the fact that the Tomahawk was a faster airplane.

Tomahawks can easily fly about eight knots faster than a Cherokee 140. It may be hard to believe, but the *Aviation Consumer Used Aircraft* ***Guide*** will verify that a Tomahawk flies faster than a Cherokee 140. What an embarrassment!

Many 140 owners remind me of fishermen who boast about the "one that got away," by saying they can easily cruise along in their stock Cherokees at 120+ mph. Stock 140s simply don't move very fast despite the fact that many owners say otherwise. The Used Aircraft guide says a 140 will chug along at from 110 to 117 mph. My Cherokee was closer to the bottom figure and I was very displeased in the overall performance.

As a result of my disappointment, I decided to do something about my slow flying plane, An engine upgrade was out of the question because it would be costly to install and would only consume more fuel. I really liked the fact that my 150 horsepower 140 flew well on auto fuel at about $1.09 a gallon. An upgrade to a 160 Hp Lycoming wasn't practical because 100 LL at $2.20 per gallon wasn't an option on my meager budget.

I took about a year to investigate different speed modification kits offered by manufacturers and it is easy to see why speed mods are popular for Cherokees. A lot of things can be done to improve a Spam-can such as mine. The flap hinges, for example, are appalling energy-efficiency robbers. Next time you look under the wing of your airplane look closely at the hinges. They are large pieces of U-channel type material facing directly into the wind. Try holding four fingers of your hand out the window of your car as you drive 60 mph next time. Imagine that force at 120 mph over the life of your airplane. This one small example of drag, alone, has been robbing all Cherokee owners of both speed and fuel.

And while looking under your wing, look at the massive gap between the trailing edge of the wing and the leading edge of the flaps and ailerons. This entire area, on both wings, is almost large enough to park a set of golf clubs minus the woods. I'll be first to admit the Cherokee is a great-looking little airplane, but 'geeze, Piper sure came up with a serious drag problem in taking design and production shortcuts.

Cherokee Hints & Tips

After reading everything available about Cherokee spccd mods and examining a few Cherokees that had speed-kits, I settled on a kit from Laminar Flow Systems.

The company offered a very comprcliensive line of aerodynamic enhancements beyond aileron and gap seals, to include some attractive and very slippery looking wheel pants. I also liked their flap hinge fairings and fairings that cover the screws, seams and rivets along the fuel tanks. Talk about a dirty airfoil - Cherokee wing tank screws and rivets resemble something one would expect to see holding iron blanks together on a WWII battleship.

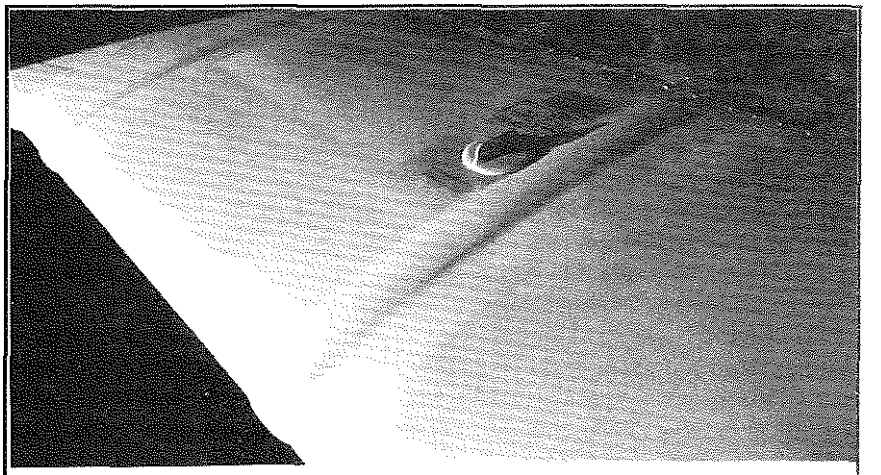

Fuel Tank Rivets are Covered by Fairing

Despite the fact that Laminar Flow Systems had just csperienced a very devastating hurricane this past storm season. I received my kit a few weeks after the island was nearly blown out of tlic Caribbean. Robin Thomas, prcsident of LFS, Inc., must be kin to Hucklcbcrry Finn or at least Leif Erickson.

When the LFS mods arrived I clicckcd everything, reviewed the instructions and was ready FOR installation.

I found the whole process rather simple and completed all installations in four days. I guess after spending more than two years in building a kit plane this installation was a breeze, but it might take an inexperienced owner a while longer to install. Also, note that all work must bc done under the supervision of an A&P if you plan on doing the installation yourself. like I did.

The only thing that really required a little elbow grease was sanding a two-part epoxy material that is applied along the fuel tank fairings. 1 elected to use a product produced by Poly Fiber that I purchased from Alexander Aircraft Co. The installation called for using Bondo. which many people have used over the years on various aircraft. I likc the Poly Fiber material because it was developed for aircraft and won't shrink. Poly Fiber worked great on my experimental airplane and the small amount nccdcd for the LFS fuel tank fairings worked perfectly.

Much of the installation proccss was done working alone except I needed a spare set of hands when installing the Fancy Pants on tlic main gear legs. Help was needed to hold some parts for marking. but this installation was very easy and took just over an hour for all three gear legs.

The moment of truth was near. On the fifth day. an A&P-IA signed off my paperwork and I was ready to makca few touch and go landings. My Cherokee flew differently and I wasn't prepared for what followed.

The first thing I noticed upon takeoff was that the Cherokee took less runway lo become airborne. despite the fact that I didn't have the usual 10 to 15 rnph prevailing headwind The nose-up attitude was very noticeable on climb-out and my rate-of-climb improved as much as 300 feet per minute.

On my first turn to base I was doing everything as I had in my first two years of flying the Cherokee, except I grossly overshot the runway. I couldn't beiicvc it. Cherokees sink like a rock without power on final approach! After not even touching down on the runway bccausc of the overshoot, I went around for another landing attempt. Still. on the second try, I came in loo fast. and again overshot my intended landing spot.

After taking a few days to become accustomed to landing my newly modified Cherokee, I lravc found that it actually is more controllable upon landing and I now make more "greaser" landings than I was ever able to do in the past. Colic are those unpredictable landings that I've been guilty of making with my unmodified Cherokee. I'm sure most Cherokee drivers arc very aware that if airspeed bleeds off in a stock 140 on final. the airplane will drop on the runway like a fat pig.

The second new sensation came after making a few short cross-country flights. I had to relearn and become accustomed to seeing more landscape over the nose. My angle-of-attack had changed in flat-out level flight. The nose on my airplane now seemed to bc lowered by about three degrees. This took me several weeks to get used to, but I really like the new and improved view over the panel. I feel much safer by having a better view of traffic ahead and below me during long cross-country flights.

My Cherokee also seems to zip along like a new airplane now. I have seen a great improvement in cruise spccd. No stock Tomahawk will every fly faster than my Chcrokcc now because my cruise speed has gone up from about 111-112 to 134-135 mph at just under 2.550 rpm. Flat out. at 2.700 rpm, I am getting somewhere close to 145 mph, but I've only made a few runs at this engine rpm. I'm not a speed-demon, I'm simply a penny-pincher.

On a recent trip from Santa Tcrcsa. New Mexico to Abilcne. Texas, my GPS showed a 175 mph ground spccd. I will admit to having a quartering tailwind of 30 mph on this trip, but tlie old Cherokee has never-ever shown this type oi performance since I bought it in 1993. I don't expect to experience this speed very often, bur I do believe that LFS

mods greatly increase flat-out speeds, cruise speeds, and lower stall speed while increasing overall performance.

Another area that I am thrilled with is the performance of my airplane when fully loaded. I used to really sweat when making takeoffs with tanks full, luggage in the back and me and the wife up front. The Cherokee now has a wliole new attitude and has given me greater peace-of-mind when taking off at full gross weight. Climb out is impressive when the old bird is stuffed full.

Duc lo tlie increased speed, I now have the option of either flying faster or flying at lower engine rpms consuming less fuel during my cross-country trips and extending the life of the cngine. I also have a new level of confidence if theengine should ever quit. The Cherokee seems to bc happy to glide now. Previously, when cutting engine power. the old bird just dropped out of tlie sky. Thesc days I think 1'11 have more time to find an emergency landing site if the Lycoming locks up.

I spend a lot of time flying back and forth to see my parents in a town about 200 miles a way. In looking at my log book I have noticed that I liave shaved off nearly 25 to 30 minutes of flying time on this routine cross-country trip. This translates into saving nearly 100 gallons of fuel per year on this one destination alone. It is now faster and cheaper to visit my folks! And. I now make this cross-country trip faster than my Tomahawk ever did.

A final note about speed kits. Prior to installing the kits. I installed new Met-Co-Airc wing tips and Knots-2-U wing root mods. While I didn't notice any particular speed increase. I did see an improvement in rate-of-climb and believe these two mods helped improve a right heavy wing problem I had for some time. I don't know why they improved the wing condition. but I know that since their installation I no longer fight a heavy wing.

I am looking fonvard to seeing what my new service ceiling will be. In theory I should be able to get a bit higher since the airplane now has less drag and greater efficiency. but I won't find out until a few months when I fly across mountains over New Mexico and Arizona on a trip to Death Valley. California.

The really big adventure that I wouldn't have planned with the "old" Clicrokcc is a flight from Florida to the Bahamas...(Hey, this is bold and brave for a desert-locked land-lubber from west Tesas!) Looking at my globe, and feeling more confident in how the Cherokee now seems to glide. I might just take this leap of faith...but it sure won't bc during the hurricane season!

Oil Filter **Tricks**

My Chcrokcc originally had a screen-only oil filtration system and I elected to remove it. adding a full-flow paper element filler system. The old screen did a grcatjob at filtering out small boulders. but made for a lousy engine oil filtcr by allowing lots of small particulate matter and rnst to go by through the screen.

I purchased a used spin-on oil filter system from Wentworth Aircraft and got a much better deal than by buying new Wentworth was good to work with. The phone rep knew exactly what I needed and shipped the product in less than three days.

The used spin-on oil filter system was made into a super filtration system by adding four each rare-earth supcr magnets outside the Champion oil filter housing. 1 learned this trick from the book, *101 Ways to Extend the Life of Your Engine.* The book can be ordered by calling (203) 834-0330.

These tiny super magnets suck metal particles from your oil and increase the filtration efficiency by tenfold or more. Regular oil filters can "catch" impurities down to 25 or 30 microns, but rust and smaller particles can easily pass completely through a filter. The rare-earth supcr magnets capture much smaller ferrous particles and can make your filter trap metals down to three microns.

I remember as a youngster watching my dad cut open oil filters. looking for clues of engine wear. Many A&P mechanics still do this today to determine how an engine is wearing. The best way to do this is by using an oil can cutter, not a hack saw. Oil can cutters from aircraft supply houses cost around $100, but I bought a large pipe cutter from Harbor Freight Sales for less than $18 that works fine in cutting my Champion filters.

In cutting open my filters, I discovered what a great job the super magnets were doing. At each attach point where the magnets were inountcd, metallic residue remained on the inside walls of the can. It is easy to see how this type of abrasive material can easily pass through the old oil screen and enter tlie lubrication system for more passes through an engine.

I would highly recommend that anyone breaking in a new, rebuilt or top-overhauled engine consider this type of tiltration system. I had just installed new pistons. rings, valves and jugs on my cngine and the magnets captured a lot of material that typically is associated with tlie first hours of engine break in.

I took a photograph of a cut-open filter and a new filter about to be installed. If you look closely at the cut-open filter, you should be able to see the metallic residue still clinging to tlie interior wall of the oil filtcr, captured by the super magnets.

The super magnets didn't create any interference with my compass and they are so powerful they never move once installed.

Don't rush out to Radio Shack to buy magnets for your filter. I tried some and they don't even come close to the strength of the super magnets. These special magnets arc made of a rare material that apparently only comes from China. They arc $5 per magnet in a set of 4 and can bc ordered through TBO Advisor at (203) 967-8260.

New Oil Lines

One of my greatest concerns was the fact that my log books did not reflect when or if the oil lines had been

replaced. I had heard and read too many horror stories about lines breaking during flight and I didn't want to be another statistic.

Precision Hose Technology, of Tulsa, OK (800-331-5946) offered an exact replacement kit ior my Cherokee. I was amazed at how many different variations were available for the PA-28-140 and I was happy tliat PHT knew exactly what my Cherokee needed.

I found PHT through Trade-a-Plane last year after calling about five or six different companies. PHT was the easiest to deal with over the phone, had the best price, and I was very satisfied with the quality of the product.

I took a Polaroid plroto of the oil lines before removing them. While looking at a couple of other Cherokees on the field, I discovered that one of my old oil lines was installed incorrectly. I elected to use a better routing method as found on the other airplanes.

I was lucky that I decided to change out my old lines. One small oil line crumbled in my hands when I removed it. I can only guess, but suspect that these hoses were probably the original hoses that left the factory some twenty-six years ago.

In removing tlie oil cooler, I poured a quantity of oil through it to check for obstructions. Next, the new PHT hoses were installed and fit perfectly. I can highly recommend PHT products.

Crankshaft Plug

A recent Lycoming service bulletin. #505A, calls for removing a plug from the crankshaft on certain engines, such as the one in mv PA-28-140 the problem is crankshaft corrosion in certain hollow crankshafts, the result of sludge build-up.

Some crankshafts have been severely damaged as the result of moisture accumulating in and around the sludge area on tlie interior wall of the crankshaft area.

Engines with constant-speed props don't seem to have this problem because of tlie flushing action of oil passing tlirough the front of the crankshaft. If your crankshaft is like mine, oil doesn't "flush" through this area, it simply gets trapped and turns into sludge when mixed with other deposits. Infrequent flying and use of 100LL (which contains a lot of lead) only seem to exacerbate the problem. as do aircraft owners wanting to go 50 or more liours between oil changes.

Over the ycars. some crankshafts have lusted on the inside to the point where they cannot be repaired. The problem is apparently found in aircraft that aren't flown very regularly and in areas of high humidity.

My dad carefully drilled a small hole in the plug and placed a hose from a shop-vac near the drill to collect metallic particles. Tlie plug was easily removed by inserting a screw driver into the liolc and working tlie plug loose.

It was like pecnng into a haunted house as I saw all the goo lurking in the chamber of the crankshaft. Over the years, a lot of lead and oil deposits had accumulated on the interior wall of the crankshaft. The sludge went back about five inches into tlie crankshaft, but was clean from tliat point back where oil journals keep the crankshaft flushed.

We made a small scraping tool out of 3/8 inch aluminum tubing, that resembled a small spoon with a 90 degree bend at the head. This tool. along with a chisel-point screwdriver allowed removal of tlic sludge. Tlie goo was scraped carefully forward into a plastic container. We removed enough sludge to completely fill two good-size coffee cups, but fortunately, there was no cvidcncc of corrosion on the interior wall of the crankshaft. The original milling marks were still evident, which was a good sight to see.

We purchased two new crankshaft plugs in case I damaged one during installation. They wcrc purcliascd from Superior Air Parts in Dallas. Texas. This group has been good to do business with and often docs not need a part number when talking to them on the phone (214-233-4433).

The new plug was easy to reinstall. We used a large wooden dowel about the size of the plug and simply tapped it back in wit11 a hammer. After more than 120 hours of flying, there is no evidcncc of oil leaks in this area.

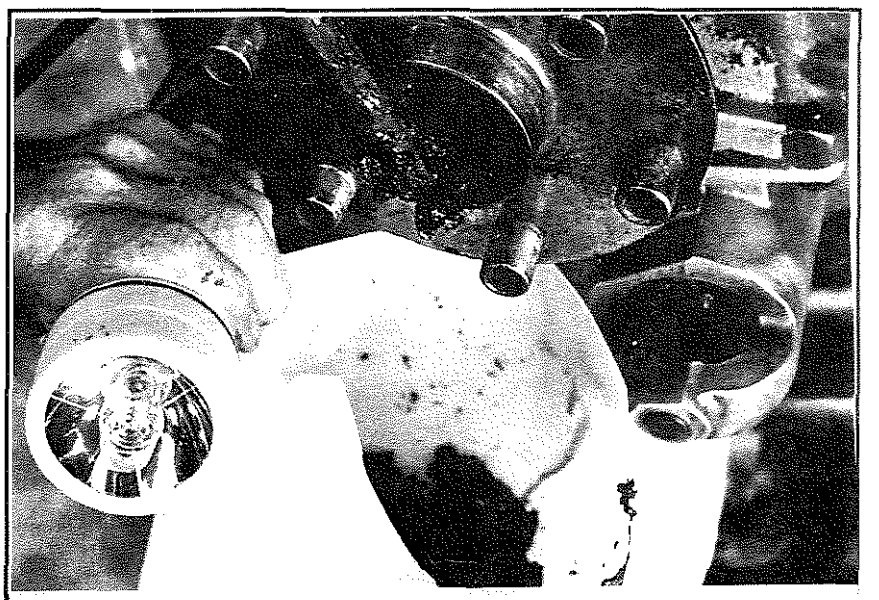

Sludge Occupies Large Portion of Milk Container

Power Chart For 140

by David Johnson

Recently a Cherokee owner passed through our local airport for a fuel stop and I visited with him for awhile and cornpared notes on Cherokees since I am a proud Chero-

kec owner, too.

Cherokee 140	2150 Gross Wt.
Take Off Run (Flaps Up)	800'
Take Off Over 50' Obstacle (Flaps Up)	1700'
Landing Roll (Flaps Up)	523'
Best Rate of Climb	85 MPH
Best Angle of Climb	75 MPH
Climb Enroute	100 MPH
Useful Load	949 LBS
Flaps Down Speed	115 MPH
Stall Speed (Flaps Down)	54 MPH
Touchdown Speed	55-65 MPH
Stall speed (Flaps Up)	64 MPH
Approach Speed/Short Final (Full Flaps)	75 MPH
Long Final/Approach	85 MPH
Manuvering Speed	129 MPH

Power	75%	70%	65%	60%	55%	50%
Gal/Hour	8.4	7.8	7.2	6.7	6.1	5.3
Horsepower	105	98	91	84	77	70

Standard Altitude	RPM/TAS					
1000	24001122	23251118	22751114	22251109	21501105	20751102
1500	24251123	23501118	22751115	22251110	21751106	20751102
2000	24251124	23501119	23001115	22251111	21751107	21001102
2500	2450/124	2375/120	2325/116	2250/111	2175/107	2125/103
3000	2450/125	2375/121	2325/117	2250/112	2175/108	2125/103
3500	2475/126	2400/122	2350/117	2275/113	2200/108	2125/103
4000	2475/127	2425/122	2350/117	2275/113	2200/108	2125/103
4500	2500/127	2425/123	2375/118	2300/114	2225/109	2150/104
5000	2525/128	2450/123	2375/118	2300/114	2225/109	2175/104
5500	2525/128	2450/124	2375/119	2325/115	2250/110	2175/105
6000	2550/129	2475/124	2400/120	2325/115		
6500	2550/130	2475/125	2400/121	2350/116		
7000	2575/131	2500/126	2425/121	2350/116	2275/111	2200/106
7500	2600/132	2525/126	2425/122	2375/117	2275/112	2225/107
8000	2600/132	2525/127	2425/122	2375/117	22751112	22251107
8500	2625/130	2525/128	2450/123	2375/117	2300/113	2225/107
9000	2625/128	2550/128	2475/123	2375/117	23001113	22251108
9500	2650/126	2575/127	2475/124	2400/118	2325/114	2250/108
10000	2650/125	2575/125	2475/125	2425/118	2325/114	2250/109
10500	2675/122	2575/122	2500/122	2425/119	2350/115	2275/109
11000	2675/120	2600/120	2525/120	2425/120	2350/116	2275/110
11500	2700/118	2625/118	2525/118	2450/117	2350/117	2275/111

He shared with me information from a performance chart that he had and allowed me to copy it. I had not seen this material before - at least not on the 140, and pass it along for wliatevcr it is worth . (See chart above)

Stop Mess From Fuel Drain Leak

By Jerry L. Kessler

We have suffered from a malady that wc are certain afflicts all Cherokee owners - the leaking of fuel tank drain valves onto the wheel pants of tlie airplane.

The positioning of these valves are such that a slight dnp of fuel is destined to create a stain on top of the pants or destroy tlic paint entirely At our last annual, wc installed a set of Laminar Flow Systems Fancy Pants on our 1967 Cherokee 180. Since this procedure called for removal and incorporation of our existing pants into tlie fairings of tlie Fancy Pants kit, we applied new paint to the completed assembly before reinstallation.

We had recently replaced the O-rings in both tank valves and they were remaining bone dry. Apparently they were only lying in wait for the newly painted wheel pants to be installed. for within a month both sides had managed to drip just enough fuel to ruin the new paint on the pants.

In trying to come up with a way of preventing this situation in the future we devised a very siniplc fix. Using a couple of small plastic snap lid refrigerator food storage containers found in a discount store, we fabricated cups to hang from the cross-T portion of the drain valves. We cut a keyhole shaped slot which allows the cup to be placed up over the valve and then turned 90 degrees to lock in place. They can be quickly removed prior to flight and reinstalled before hangaring. This less than $3 solution has eliminated a very frustrating maintenance problem for us.

Winter Starting; Other Alaska Tips

By Bradford Parker

Although high-wing planes arc preferred up here. I have seen some PA-28s with 850 tires and a PA-32 fork on the main. This makes them look really tough, like a jeep of the air.

My 140 is a 1975 with wingtip and tail strobes. copper cables, loran and an auto gas STC. No problems at all with auto gas, although 1 always have a few gallons of avgas 100 in tlie tank with tlie auto gas and I only use avgas in one tank which I use for takeoffs and landings.

I take great interest in the ideas in the Hints & Tips book At a recent FAA seminar one of tlic presenters. a commercial air tasi operalor, recommended not turning the prop over by hand in cold weather prior to starting. He said that the oil really docs not lubricate well because there is no oil pressure and you are just scraping bare nictal against bare metal. After preheating, he says, you should just get in. prime her and start her up.

Finding suitable auto gas without alcohol in it in the ~ i n f emonths is difficult, but one of the avgas dealers at Anchorage International offers discounts on Sundays.

My plane developed a bad case of vibration which necessitated leaning immediately after takeoff. My A&P and I invcstigated and found the cause: a leaking primer.

One thing I keep in mind when draining tanks in the winter is do not force the drain. If the sump docs not work it is because there is ice there. Forcing it will only loosen it up so it can possibly float around and plug the fuel line. You need to get it in a hangar where you can get tlic ice inside to melt and then drain it out.

Electrical Problem--Voltage Too High

By Joe Konicki

A friend of mine recently ran into some interesting electrical problems which I'd like to share with fellow members. Since my friend isn't too mechanically inclined. he typically takes his problems to the local mechanic who is really good in most areas, but very weak when it comes to electricity (he admits this himself).

The problems started soon after my friend had a copper cable upgrade (I do not know what brand) installed in his 79 Turbo-Arrow. Coincidentally, during the same gen-

eral time frame. I also had a two-gauge copper cable kit installed (from American Aviation) with which I am very happy. Anyway, my friend's starter really cranked well after the installation, but after 15-20 minutes of cruise flight the alternator would drop off line.

Putting a voltmeter on the electrical bus showed the voltage at cruise would start out at 13.5 volts and begin to rise to 15.5-16 volts until the overvoltage relay would take the alternator off line. The mechanic adjusted the voltage rcgulator to its lowest selling. but the voltagc would still get to 15 volts. My friend in the meantime would fly with all of his electrical equipment turned on to load up the alternator and keep voltagc around 14 volts.

In the meantime, Mr. Mechanic proclaimed the voltage rcgulator "shot." and installed a refurbished one. The second flight with the new regulator began to show the same problems; my friend was now starting to get angry and swore he wouldn't go back to that mechanic!

After a few more flights the alternator just stopped working (my friend had a change of heart and was back with Mr. Mechanic again). The mechanic pronounced yet another death and installed a new alternator (my friend and I took the old one apart and found that some stator winding wires had come loose and were making contact with the rotor slip rings, thus causing the alternator to uncontrollably draw power from its own windings.)

The wires had eventually worn clear through and separated-thus, the alternator output fell lo zero. We were amazed something like this could happen. My friend also remembered that he could hear a faint humming on his navcoms and ADF when engine speed was changing (this problem went away with a new alternator installed). So, with new coppcr cables. new voltagc regulator and a new alternator my friend was set, right?

Well, unfortunately not.

Around two weeks later my friend called and guess what problem had reappeared! I hustled over to watch the "new" alternator being taken apart, expecting to find the same shorting problem, but that was not the case. We were now all perplexed - we had checked everything in the electrical system. I suggested we start from ground zero.

After an hour. the resistance between the main bus and the supply lead to the voltagc regulator was three ohms. Not much, but more than the expected .1 to .3 ohms.

When I attached the leads to test the overvoltage relay, I found the screw on the voltage supply to the relay had almost completely backed out (or had never been tightened.) After tightening all connections, the resistance was 15 ohms. The next flight showed a rock steady 13.75 volts at the bus with varying engine speeds.

It has now been six weeks and many flights later and my friend has had no problems. He has recently had a voltage indictor installed and now makes it part of his scan. In retrospect, the higher resistance in the electrical system before the copper cable installation may have masked a problem or it could have just been a coincidence. Regardless, we are all a happy team again!

Valve Causes Engine Problem

Dear Terry,

On a recent trip in my 1970 140C I ran into a little trouble. After about a ten minute climb out, the engine made a loud "bang" accompanied by an extreme vibration.

My first reaction was to switch tanks all the while looking for a place to set her down. By pulling the RPM back to 1500 the vibration became less violent and I safely made it to Perris Valley (a small skydiving airport) only thrcc miles off my right wing.

After thanking God for my safe return to mother earth, I began to inspect for the cause. With the help of a local A&P wc determined it to be the right rear cylinder that apparently "sucked a valve."

My next move would be to determine if the engine had suffered internal damage from the shredded metal particles. The engine oil was relatively metal-free, but upon draining the oil from the filter, my heart sank as 1 watched large metal flakes pour out.

Some A&Ps agree that this would require a major overhaul while others say "not always." If the remaining cylinders are undamaged, would it be safe to replace the bad jug and continue flying?

Scott Strasbaugh
Rancho Mirage, CA 92270

Dear Scott.

From what you describe, that engine could be a ticking time bomb and I would certainly be uncomfortable flying behind it. As a general rule, you have major problems anytime you find more than a quarter teaspoon of metal in the filter or where you find individual pieces as big as a pencil lead.

Checking the other cylinders for damage will not solve your problem because the major damage will still be hidden - when that metal travels in the engine it goes through numerous oil passages and, if the oil filter bypass valve opens. into bearings and throughout the valve train.

If you still have questions, save the particles and confer with the "ultimate authority," Lycoming (717-343-6181), but I am afraid they will also be suggesting the plane be grounded pending a complete overhaul.

TERRY LEE ROGERS

Recommends Replacement Strobe

By Marcus Norton

A few weeks ago the old Whelen rotating beacon on my Archer stopped in its tracks. It still lit up. but there was no rotation.

That had happened once before and I found parts (electric motor and gears) at Oshkosh for about $50. This time I talked with Whelen: they no longer support the product.

I found a used Grimes rotating beacon at M&K Aviation in Jeffersonville, Indiana, for a bargain price of

$100. But light output sccmcd low, and it rotated slowly.

I worried that a strobe unit might create a lot of light spatter on a low-wing Piper, but, nevertheless, I ordered a ncu one from Linda Lou in Memphis for about $280 (901-365-6611.)

When it arrived it was clear the unit would more than fill the space taken by the old beacon. Part of the power supply would jut well above the light fairing. The strobe would have done the job, but the asthetics were not ideal.

I talked further with Whclen (860-526-9504) and learned it makes a flasher unit - much like those on most Cessnas. With an adapter for the Piper mount, the flasher unit would fit - without jutting into the airstream. I liked the look, and the price - about $130 from Linda Lon.

It is a special order for Linda Lou, so it cannot be rctumcd if you do not like it. When installing, pay special attention to the instruction to use RTV to seal out the weather. But installation is simple. The beacon looks good and produces a strong light.

Skin Cracks in Warrior Wing

By Curtis Sitler

Dear Terry,

This letter concerns cracks inside the right wing of Piper Warriors. This model has the taper wing design. I have made some sketches of the right wing area; this area is directly under the wing walk and cvcn with the cabin access door.

The Piper part number is 62061-02 and consists of an outer wing skin which forms the top skin of the right wing and a stiffener pancl which provides the backup structurc for the wing walk area to carry the loads imposed by pilot and passengers walking on the wing while entering or exiting the cabin through the door. Also included is a copy of a photo of a replacement skin panel.

The cracks are in the stiffener pancl and not in the wing skin. I believe the wing skin cracks reported in the FAA Airwortliiness Alerts in the December issue of POM arc very similar to these cracks.

In my aircraft the crack in the stiffener panel is approximately three inches long. This was found during the last 100 hour inspection and can be seen from the inboard, forward inspection opening in the lower surface of the wing. The condition is also detectable as an increased deflection of the wing walk area directly above the crack.

This condition appears to be a common problem since two aircraft in our aero club have tlie same cracks. Each of these aircraft have different histories with one having 6,100 hours total time and the other with 0,200 hours total time. Each aircraft has an almost identical crack.

I am sure other Piper owners have experienced this same condition since this stiffener pancl is similar in all models which use the taper wing design.

Replacing the skin and stiffener panel appears to be a majorjob. The inboard rivets are not accessible without removing the wing. Our aero club mechanic thinks the skin and stiffener can be replaced by using blind cherry rivets in the inboard rib. The remainder of the rivets are accessible through the inspection openings. This repair, by replacing the panel, does not solve the basic design problem which

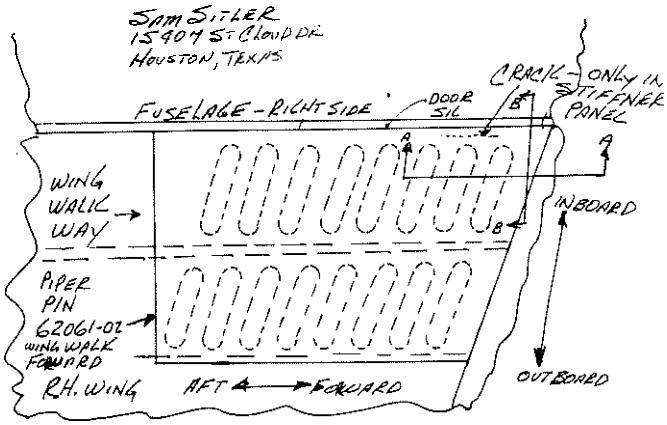

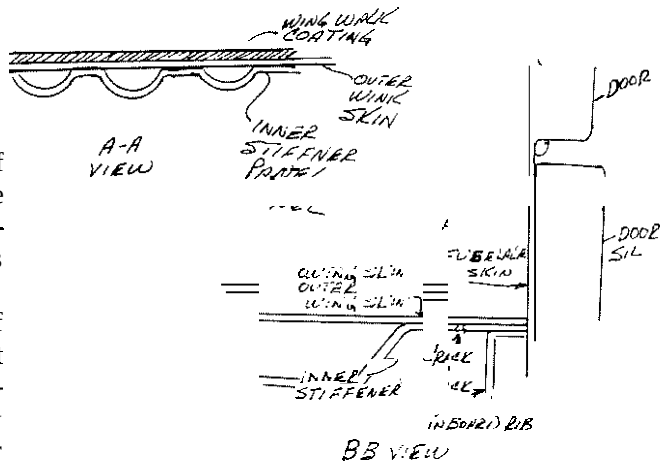

allows the cracks to develop in the first place. This appears to be a design problem which is created by causing a concentrated load to be applied on the wing skin directly where the foot is placed when entering or exiting the cabin.

I have developed several fixes but have not received approvals as of now. One fix would be to add channels in between the raised portions of the stiffener. With clips on each end of the channels, these would transicr the vertical load (someone standing on the wing walk) into the webs of the inboard rib and first outer rib.

On a different subject, I have also taken the recommendations in the Piper Owners' Magazine and replaced the voltage regulator/over voltage sensor relay, with the kit, Piper part number 746-928V. Our friends at Air Parts of Lock Haven were able to provide me with the part and the Piper paperwork necessary for installation. The unit fixed the excessively wild oscillations in the ammeter. It also cured a severe ADF noise and minor directional errors that were being experienced.

Trim Motor Rebuilding

By Art Teel

In response to the question in the December issue of POM concerning electric trim rebuilding, such services are provided by Braden Flying Services, Easton, Pennsylvania Airport. The radio shop will do the rebuilding at a cost of approximately $350 depending on condition. The telephone number is (610-258-1706).

There have been several design changes in the trim motor and capstan assembly tliat are not identified by part number changes, so tlie only sure way to have a usable repair is to send the actual unit, not exchange it with another.

Lightweight Starter; Seal Kit Problem

By Bob Fox

Through the years I have had more than my share of failures of the starter system in my plane. From several Bendix failures, shearing of the Woodruf keys, similar problems with another pin, tlie motor itself acting up and having to be redone several limes, to the icing on the cake, when tlie housing enclosing the starter out on tliat cantilever stance cracked.

I Installed the Sky-Tec Hi-Torque starter early this summer. Part of the reason I am writing is to provide information for others contemplating such a change and a warning to be very careful about installing the starter precisely according to the instructions. This is also a warning about making sure your mags are up to snuff so the starter cannot be allowed to go backward.

My mags were checked and were OK. A couple of weeks after the starter installation, however, and away from home, naturally, tlic engine turned backward on several occasions. I was ready to see my nice new starter turned into junk.

As it turned out. tlie cause was tlie battery which must have been ready to cash in at that time. I asked Sky-Tec if the starter needed more amps to operate. I was just advised by the manufacturer tliat the Sky-Tec starter does not require more amps than the stock motor and also that I have not hurt it. Tliey also answered another question I liad - that is. the new starter does not need to be lubricated, as did tlic original.

The Sky-Tcc motor weighs only 10 pounds versus 18 for tlie original. They also make a unit whicli weighs only eight pounds, but that one will not fit my bird. And that is my next warning: make sure you install the correct starter.

The installation was easy, and it seems to make sense that the design will not be a strain in the unit itself and the electrical system. The starter spins the engine like a top and it seems to fire a prop blade sooner. I don't think it is my imagination (Not "Hawthorne effect" either.) One drawback is that it requires an STC, a 337 and a new weight and balance whicli must be done by a mechanic.

In summary, for someone inclined to get this starter. I would suggest the following:

1. Order the right model (ring gear tooth check is critical.)
2. Check both the mags and the battery.
3. Compare the price of both the original and this model.
4. Look at the gain in useful load as an argument for or against.

On another topic, I installed GAC gap seals and hinge covers many years ago. We found the teflon-like tape, which is on the seals, was rubbing the paint off the ailerons and parts of the flaps. I looked at the gap seal maintenance manual and found that this tave was actually a 3-M vroduct. It is polyethylene sticky tape - very much like "Scotch" tape

I called 3-M and was given three vendors in the Orlando area. I finally was able to get one vendor who would sell me one or two rolls without going into orbit about how small the order was. (The other two told me the tapc was a special order item and they did not routinely stock it.)

The trouble is that the tape, which 3-M says should sell for about $25 a roll, was sold to me for almost $49 a roll (including shipping 80 miles from Orlando to Vero Beach. The vendor was R. S. Hughes. They were very accommodating on the phone and took the order with a credit card and the stuff arrived a few days later. All in all a good deal until I got the Visa bill a few days later. After a call to Hughes, they said that was the price unless you ordered a case.

Repair Your Sun Visor Clips

By Dr. Louis J. Capozzoli

The two cup shaped supports on the center post holding the free ends of the visors became worn with the visors falling out. Lack of support of the free end could cause vibration to break the visors.

The center supports are held witli a round-headed screw secured witli a barrel nut with no slot in tlic head. Turning tlie screw liad the barrel nut turn. I drilled a hole into the aluminum barrel nut with a rightangle drill, then used an easy-out to hold the nut while I unscrewed the screw. Another connection between these supports turned out to be about a 1/8 inch round plastic pop rivet. This I drilled out easily.

I cleaned the plastic with sandpaper witli special attention to the pocket edge in whicli the visor rests. I then used Five Minute Epoxy and built a wall about 1/32 inch high across the open end of tlie support. The easiest way to do this is to put the epoxy around the edge and leave it resting downward on the open end on a piece of waxed paper. After the initial five-minute set of tlie epoxy. I put it in an oven at 225 degrees for ten minutes.

After this, I cut the excess epoxy from tlie support. I then drilled a 3/8 inch hole through the epoxy fill. extending it to the edge of tlic support as a narrow slot. On remounting the support, cracks developed in tlie plastic around the bolt holes. I gently opened these cracks and put addi-

tional epoxy therein.

Again, I went through the waiting and baking procedure. If you are sloppy with the epoxy, you will have to redrill the mounting holes. I then installed the holders back on the windshield using the original bolt and barrel nut. I replaced the plastic pop rivet with a No. 6 screw and nut. You need a small screw because the round ball on the end of tlie visor rod will hit this screw if the head is too large. The No. 6 screw must be cut to length, about 718 inch. Start with a longer screw and adjust, accordingly.

Light Starter; Wheel Fairings

By Michael Stevens

It has been about ten months since 1 had a Sky-Tek Super Flyweight startcr installed on my plane. The reduction of about 10 pounds up front helps offset the 13 pounds added by the Black Mac prop on my plane. The starter installation did not require any modification of the engine baffles. It did however require the wiring to be adjusted due to the starter being shorter in length than the original.

The starter turns the engine over significantly faster than the original starter did. This last summer I no longer had any hard starting problems. I believe tlie starter was responsible for this.

Another item I had installed at the same time was LoPresti's wheel well fairings. They arc worth about 3 mph in cruise speed on my plane. The kit impressed me in its quality of parts and the detail the instructions.

Looking for Panel Decals

Dear Terry,

Where can we get decals for the plastic instrument panel covers? Wc are replacing the panels, but where we are getting the panels doesn't have the decals.

Thank you for your help
Sincerely yours.
Ron Butler
Round Rock. TX

Dear Ron,

Most of the decals needed for your panel are available on a preprinted sheet of decals available from either Aero Graphics. 9740 SE 58th Ave., Bcllcview, FL 32620 or from Aero D-Cals, 3240 Drane Field, Rd., Lakeland, FL 33811. If you need any specialized decals, you are limited to m king them yourselves with a tape embosser or having placards made up at your local stationery store.

Sincerely yours.
TERRY LEE ROGERS

Warning on Trickle Charging

By Bob Phillips

I discovered many years ago that trickle charging my boat batteries will eventually dry them out.

The technique I use today is to charge them daily using an appliance timer to eliminate boil over. It is also important to check water level regularly.

Solved Master Cylinder Problem

By Don McGohan

One day I was taxiing out to takeoff when 1 heard a loud "pop" and immediately lost all pressure in my right toe brake. After several unsuccessful attempts bv mv mechanic using more than one method to restore brake pressure by bleeding the brakes (we all know about those difficult-to-bleed Piper brakes, don't we?), it was finally decided that a brake ovcrhaul was necessary.

The first bit of bad news was that, unfortunately. overhaul kits for these brakes aren't available. It seems that tlie manufacturer, Gar-Kenyon, went out of business years ago, or, at any rate they no longer make these cylinders or the parts for them. Apparently, not all Cherokees use thcse same parts because rebuild kits are available for other models. But if you have Gar-Kenyon master cylinders with part numbers 91207 or 26044, you are out of luck.

Of course, Piper still stocks new cylinders and will be happy to sell them to you for the take-your-breath-away price of nearly $650 apiece.

Fortunately, there is a direct Cleveland replacement part for both the toe brake master cylinders and the hand-brake cylinder for much less money. Each one will cost somewhere between $100 and $150, but it will take care of the problem. I had to have all three replaced. The Cleveland part number for the toe brakes is #10-30 and for the hand brake it is #10-22.

I found out that your brakes are something you tend to take for granted until tbcy suddenly go out. Hopefully if this scenario happens to any other members this information will help.

Speed Mods & Victor Engines

By Ricky Griggs

I have found one of the best kept secrets in the Piper line. I purchased a 1977 Turbo Arrow last year after owning a Cherokee 180 for four years. This Arrow is great. I have installed all of Knots-2-U's speed mods (616-526-9646) and they really enhance the response of the Piper taper wing as well as give improved climb and more knots.

The kits were simple to install and I would recommend that if possible install all kits at once it will save duplicate labor.

I damaged a gap seal when installing the hinge fairings and I called Jim and had a replacement the next dav. Jim is great to deal with. He also supplied my windshields and side glass.

In December I found I needed a top ovcrhaul and I had 1,300 SMOH so I started looking at a replacement engine. I called Continental and six other rebuilders to see

what was available. I found a large range of ideas and prices. Then I talked with Victor Aviation in California.

These guys made sense to me. I have built auto engines for years and I know that there can be a lot of differences in rebuilds. Victor spends a lot of time correcting minor problems that make the end result amazing. This is the smoothest running engine I havc ever flown. It has a deeper sound and a better feel than before. In addition to the smoothness the climb rate is better and cruise speed is also up. The best part is the way Victor does business.

I purchased a Limited Victor Engine that he had on his shelf. They shipped the engine out wit11 the return labels and shipping paperwork. All I had to do was insert my core engine. affix the labels on the crate, and call the freight lines for pick up. During installation of the new engine Rob Baxter, who handled my purchase from my first phone call, answered many questions and even gave me his home phone number to call on the weekend if we had any problems. I would suggest anyone considering a new engine to give Victor a call.

I feel that I received more for my money than I would have with arty other major overhaul. Victor does it right from the engine to the support after the sale. You are reminded of the quality every time you say "Clear," and hear, not feel, the engine come to life.

Missing Shoulder Harness Bushings

FAA personnel from the Teterboro FSDO, conducting ramp inspections, have been discovering that the shoulder harness retainer bushings (P/N S2237-3) at the lapbelt buckle were missing and. in some cases. unauthorized repairs have been made utilizing a plastic electrical "tie wrap" in place of the bushing.

Without the retaining bushing, the shoulder harness will not bold securely on the shoulder strap retaincr stud. This situation has resulted in shoulder harnesses releasing due to missing retainer bushings that have cracked from fatigue and fallen off. In discussions with pilots, most havc mentioned that the shoulder harnesses kept coming unlatched during flight.

The use of "tie wraps" has also kept the shoulder harnesses from properly releasing due to the "tie wrap's" locking head jamming the shoulder harness at the retainer stud. Utilizing the "tie wrap" can cause the shoulder harness to partially connect to the stud and release the shoulder harness lapbelt in turbulent air and during normal body movement.

It is recommended that a thorough preflight inspection include the shoulder harness locking mechanism at each seat

Knots-2 U Strobe; Radio Replacement

By Martin J Mary

Recently the rotating beacon on my 1971 Cherokee 140 bit the dust. 1 replaced it with the strobe kit from Knots-2-U. Everything was just as advertised. My A&P said that it was one of the most complete kits he had ever seen. I made the installation myself, under the supervision of my A&P, and it was easy

Also, recently I upgraded my avionics by replacing one of the MK-12As with a Michels TKM MX-12. I havc really been happy with this product. I also purchased it from one of the classified section advertisers -Nick Knezevick of Digital Systems (405-722-3506). He is a dealer for Michels and will usually be able to match the prices advertised in Trade-a-Plane.

One thing that he does that others probably do not do is to request that you send him your indicator. He will then bench align the indicator to the navcom. If any of the readers wanted to upgrade from the older radios, I would recommend Nick and the Michels/TKM. These navcoms also have a three-year warranty.

Concerned About Ammeter Shunt

Dear Terry,

The POM is one of my favorite pieces of mail each month. I found an article written by one of the members very helpful in resolving a problem I was having with my Turbo Arrow's landing gear system.

I am curious about the ammeter AD which was implemented years before I bought my plane. What was the purpose and why does my plane have under its instrument panel a large coil of wire used as a shunt? I would like to disable the existing and erratic ammeter and shunt and replace them with an approved digital indicator.

Sincerely yours,
Richard Seeley
524 Foxen Drive
Santa Barbara, CA 93105

Dear Richard.

The purpose of the ammeter AD was to eliminate a potential source of in-flight fire. The early ammeter design was a bit flimsy for the amount of current oflen used by a Cherokee while in flight.

Several companies offer digital ammeters including J.P. Instruments, P O Box 7033, Huntington Beach. CA 92615 (800-345-4574) and Electronics International. 5289 NE Elam Young Parkway. #G200, Hillsboro. OR 97124 (503) 640-9797.

Sincerely yours.
TERRY LEE ROGERS

Cherokee 140 V Speeds

Dear Terry,

That Cherokee Performance Chart that David Johnson sent to you was most interesting Those numbcrs were, of course, extracted from the performance curves in the Cherokee owner's manual, but are much easier to read in tabular form

V SPEEDS CHEROKEE 140 N4539R

VY	BEST RATE	85 MPH	MCA	75MPH	FLAPS UP
VX	BEST ANGLE	78 MPH	MCA	65MPH	FULL FLAPS

W E NEVER EXCEED	170 MPH	THIS IS RED LINE
MANUVERING SPEED	129 MPH	ROUGH AIR PENETRATION
YELLOW ARC	140–170 MPH	SMOOTH AIR ONLY

APPROACH TO LANDING

0 FLAPS	85 MPH	
10 DEGREES FLAPS	82 MPH	
25 DEGREES FLAPS	79 MPH	BEST GLIDE SPEED 83 MPH
40 DEGREES FLAPS	76 MPH	

STALLING SPEED WINGS LVL POWER OFF

0 FLAPS	64 MPH
10 DEGREES FLAPS	61 MPH
25 DEGREES FLAPS	56 MPH
40 DEGREES FLAPS	55 MPH

STALLING SPEED VS. BANK ANGLE

BANK ANGLE	0	20	40	50	60
FLAPS UP	64	66	73	80	91 MPH

With some help from my friends I also extracted some performance numbers and made them into a table that can be Scotch taped to a 4 x 6 file card for easy and quick reference. I am sending it along to you to print if you wish,

Sincerely yours,
Don Lenner
St. Louis, MO 63125

New Glareshield; One-Piece Windshield

Dear Terry,

As preliminary steps in an interior upgrade for my Arrow I installed a Kosola & Associates one-piece quarter-inch windshield and a Dennis Ashby fiberglass glareshield. I arn extremely pleased with the results: a completely modern, sexy front end for my '68 Arrow, vastly increased forward visibility with the removal of the windshield center support, and a noticeable decrease in cabin noise with the thicker windshicld.

Added bird-strike resistance is a nice peace-of-mind feature that, thankfully, I can't comment on at this time. However, there are significant installation issues that anyone conternplating either of these two mods should be aware of.

First, the Ashby glare shield: it is a well-made, light piece of fiberglass work, requiring very little trimming to fit. The detailed instructions, although containing some typos. arc easy to follow No time estimate is provided, however, it took me about eight hours work to get the old panel top cleaned. old panel overlay trimmed and new glare shield trimmed and fitted.

Although the instructions suggest that the glare shield can be installed with the windshield in place I do not think this is practical. The fit is just too tight and the multiple refits required to get a good fit would likely leave the inside of the windshield scratched quite badly. The only way to protect the windshield would be to use some light-gauge aluminum or formica about four inches wide, cut to fit the inside contour of the windshield and placed inside the windshield as a guard.

Even so, removing the defroster vents would be a real trick. I'd advise pulling the windshield.

The defroster vents are attached to the Ashby glare shield. To eliminate potential air leaks I fabricated thin cork gaskets and glued them to the defroster outlet flanges in the top of the existing aluminum panel top. This seemed to work as airflow is now better than before. Although the instructions suggest using two existing screw holes in the aluminum instrument panel top to secure the glare shield, I found it easier and more secure to locate two new rivnuts for the purpose

I remounted my compass solely to the Ashby glare shield instead of through-boltme, it to the aluminum instrument panel top where it had been originally. This avoided distorting the fiberglass; however, under takeoff power it vibrates badly. I think this problem could be cured by gluing a piece of quarter inch thick closed-cell foam insulation to the underside of the glare shield before mounting, something I elected not to do.

Finally, three issues arose regarding the existing instrument panel overlay My airplane has the old-style overlay with the molded-in glare shield lip. The top of the lip had to be cut away lo within 314 inch of the rear edge of the lip to allow the Ashby shield to sit flat. Second, the bottom outboard comers of the old panel overlay fit so closely to the lip of the Ashby panel that I think I'll have to cut my old overlay next time I need to remove it. I would recommend upgrading the panel overlay to the new style without the lip.

Finally, the lip on the Ashby shield is deep enough that it obstructs the view of the Hi/Lo Vac lights and gear indicator lights on the Arrow. I haven't figured out a fix for this one yet but am contemplating simple, passive fiber-optic cable or lexan rod "light repeaters" set into the lip of the new glare shield.

(Addendum to glare-shield installation: I finally solved the problem of the obstructed lights by mounting 8.5 mm long x 3/16 inch diameter clear acrylic rods in holes drilled in the lip of the glareshield on the centerline of each of the indicator lights. The rods press-fit into the fiberglass lip of the glareshield with about 118 inch protruding on the pilot's side. I finished the end facing the pilot by pressing on a 17132" black neoprene tap washer (the center hole is just under 3116 inch) cut down so just the bevelled portion is used. It is a very clean installation and, with both ends of the acrylic rod polished, enough light is transmitted from the indicator lights so that they are visible in direct sunlight. There is enough clearance in front of the indicator assemblies so they can be removed to change bulbs.)

The Kosola windshield, which the company estimates will install in about 8-10 hours, actually took over 20 hours to install. (1 was there through the entire process so I know what the A&Ps did was all necessary) Removing the old windshield center post was simple enough: an access

panel is cut in the top of the aluminum instrument panel top and rivets supporting the post are drilled out top and bottom.

Unfortunately, both cover plates supplied with the Kosola kit and the new steel support post had to be trimmed extensively for a good fit. Matching tlic nine holes in the mounting plates on the Kosola post to tlie upper and lower fittings required careful, time-consuming drilling as well, However, the biggest chunk of time was spent trimming and bevelling. fitting and refitting the oversize windshield to fit channelling designed for eighth inch glass.

Once trimmed. the windshield went in easily (although the interior flanges of the windshield channel had to be widened a bit) and sealed with tlrc supplied urethane sealant. (The sealant in my kit appeared to be old stock as it contained numerous hard lumps which made neat application very difficult.)

Both of these mods are worthwhile additions from a safety and aesthetic standpoint. However 1 doubt the windshield could be cost-justified, given the labor component, unless you needed a new windshield. (My A&P did comment, however, that he would recommend the Kosola one-piece to anyone contemplating upgrading to quarter inch glass as the trimming time is about the same as filling split quarter inch windshield panels). Both mods should be done together and I would suggest figuring about 30 hours labor for the two.

Sincerely,
Barry Dwyer
Vancouver, BC
Canada

Ed Note: For further information contact Dennis Ashby Co., P O Box 1584, Upland, CA 91785 (909) 982-3793 or Kosola & Assoc., P O Box 3529, Albany, GA 31706 (912) 435-4119.

Starter Fixup; Spinner Bulkhead

By Dr. Louis J. Capozzoli

Two stories about recent happenings from my 1970 Clierokcc 140.

I was having hard starting as the winter advanced. This wasn't helped with going to 15W50 oil or Ieaving a light in the engine compartment. When tlic temperature got down to 20 degrees I even had trouble cranking the engine jumping it from my car. Copper cables were installed a long time ago.

I took the starter off. One of the springs holding each of the four brushes against the armature was broken. I was trying to crank the cngine with only three-fourths of tlie starting power. This was repaired and things crank well now even if the temperature is 30 degrees. When below that temperature I usually jump it from my car.

While working on the starter, I had to remove the propeller and nose cone (one terrible design.) I found tlic spinner bulkhead was patched in one place and cracked in a second place. The FBO recommended replacing it, which I did. Surprisingly enough, they had one in stock and the price was about $60. Considering a broken spinner bulkliead can have the spinner ruin the propeller shank, this is cheap insurance.

I had the light bulb in my large beacon burn out and naturally priced the new slim-line beacons. With the price of $250, I replaced the light bulb for $16. The light bulb is a GE 1940. It can probably be obtained for about half my price from an electric supply house. Without tlic number I had to go to an FBO.

Install Your Own Carpeting

By Rich Grzywacz

The following information should in no way be construed as being of professional expertise or experience. I will relate the installation process as it happened to me, right or wrong.

Cherokee carpeting comes in a lot of pieces as required by the many interruptions in the shape of the floor. This fact could allow you to do one section at a time or tlie entire floor. Being new to this sort of work I decided to try the baggage or cargo area first.

Make sure you securely fasten the baggagc door, Next, remove all tie down belts and attachments (4). Remove the baggage door sill or latch molding at the very edge of tlie baggage area. Remove the protective grill (perforated aluminum) from the rear of the seat back at the baggagc floor level. This protective grill keeps items from falling down into the area below the seat cushion where a lot of control cables are located.

(Note: it may prove beneficial to store all screws and washers in a separate container to keep track of which

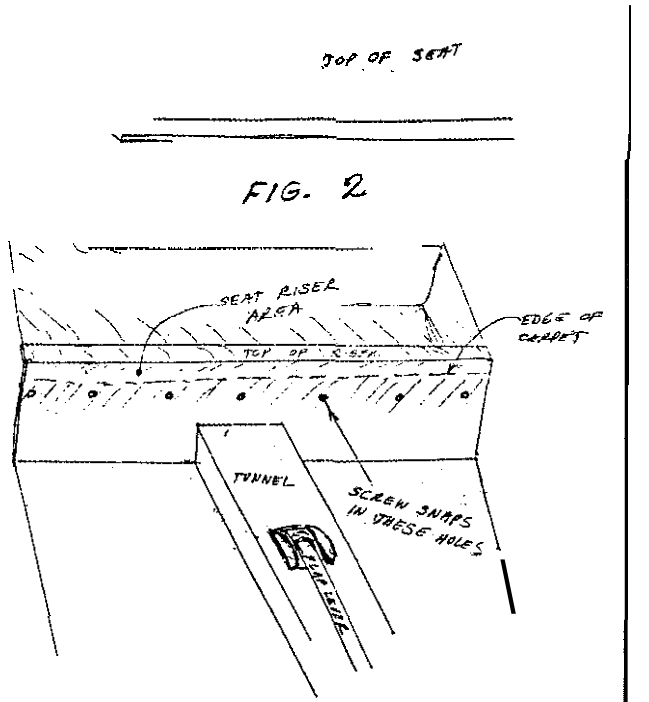

Use Guide When Doing Back Seat Riser Area

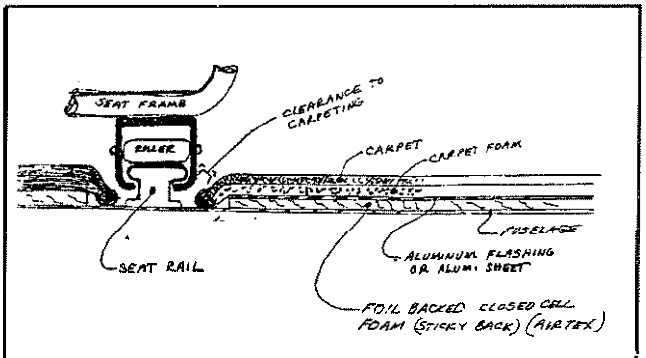

Carpeting Must Permit Clearance for Seat Rollers

screws go where.) I chose to replace all the screws and cup washers with stainless steel.

The next step is to start peeling back the carpeting or what is left of it.

In my particular plane the baggage arca had what appeared to be a cloth covering with foam under it glued to the aluminum floor area. The cloth peeled off quite easily, but the foam was another matter.

After scraping with a plastic edge tool (so as not to score tlic aluminum floor), I found a product called "goof off'. used to remove dried latex paint. A similar product called "Dad's" latex paint remover also works vcry well.

Use a large floor fan in using any solvent products. (Follow the precautions on tlie labels). I did a small area at a time starting at the deepest area away from the door. This product seemed to soften the old glue very quickly. You must use good ventilation in any of these processes.

Clean up for my baggage area was done with mineral spirits. My carpet piece was slightly larger, but as I intended to replace the wall panels very soon, when 1 glued down the foam-backed carpct I left areas turned up and overlapping. This left some extra - I did not know where I might have to trim the carpet back after installing the new wall panels.

A good snap blade retractable knife worked very well in cutting the carpct. Let only enough blade extend to cul the carpct and backing, not the aluminum. Cut firmly at a 45 degree angle into the corner between the wall and the floor. If done correctly, one cut is all that is necessary.

The 3-M company makes some cxcellcnt adhesives for foam-backed carpet. Adhesive can be obtained from auto-trim shops or vinyl and convertible top suppliers. When replacing the grill at the base of the seat back a small five-inch wood-handled awl proved most valuable for finding tlie screw holes in tlie new carpeting. Tlie holes in the grill should give a clue as to their whereabouts.

Note: I use a small, recliargeable screwdriver with a clutch. An imported type (quite inexpensive and not very powerful) is ideal for this type of work. Use the clutch on the lightest setting!!

I also found a flexible shaft eight inches long helped get into the tough area. I polished and clear-coated the grill and sill molding while they were removed. I found clear "Krylon" acrylic worked very well. Keep bound edges of the carpet under the sill molding. This may also be a good time to install those spar attachment inspection plates. This about wraps up the cargo area; now on to the main cabin.

Main Cabin Installation

To install carpeting in the main cabin the first step is to remove the front scats. (Rear seat removal is optional.) Next remove the center console trim or moldings wherever the carpet is held by these items. Remove the front floor partition molding These are the ones that get stepped on and scuffed most and take a lot of punishment I changed interior color from "Hershey brown" to "raven black" trim.

These moldings (if painted) should be cleaned. 1 used denatured alcohol. They are then spray painted with a flat undercoat and then a couple of finish coals. I also put a light spray of "Krylon" clear over the last coat for a little more protection. Krylon paint has worked very well on all my moldings.

Removing the old carpeting is the biggest part of this entire process. My carpeting consisted of a thin brown (brocade) cloth glued to 114 inch of foam all bonded to five layers of cardboard (more like the boards used in laundry-done shirts.) The five layers were about 114 inch or less in thickness.

The cloth and foam came off fairly easy. but the cardboard was another matter. After many hours of scraping and pulling most of the floor was clean except for a couple of small areas in the foot areas of both pilots where the glue was hard as stone. I could not find any solvent to cut this glue.

At this point I would like to point out that you are probably standing on the very skin of the bottom of the aircraft. I cut a piece of 1/2 inch plywood to fit **over** tlie seat rails on each side of the scat arca. This will keep you from loosening any rivets in the skin or denting or stretching the underside aluminum.

Again I did not cut the carpet to final edges because I had ordered wall panels to be installed later. My Airtes carpet and the aluminum foil backed 114 inch closed cell foam were both ordered together. I cut and stuck the self-adhesive foam cut to Dave Henderson patterns (Nov 87 issue of POM). 1 cut light aluminum flashing to the same pattern, but 112 inch shorter around the entire perimeter. This is glued down to the foil backing by 3-M adhesive general purpose spray. This flashing would keep a sharp heel or other sharp object from penetrating the foam and seems to give a more secure and solid feel to tlie floor.

Next glue down the carpet to the aluminum flashing with 3-M general purpose trim adhesive for foam. Iplaced the bound edge of the carpct pieces next to the rear scat rail to keep any fluff from binding or getting caught in tlie seat slides and rollers. Try layering all the pieces in the airplane at once and a lot of this will be much more apparent.

To do the tunnel area beneath the instrument panel you will need to remove the aluminum heat ducts that run

tlic length of the foot well arca. I took these off and repaired. straightened, polished and then clear-coated them. I bought stainless steel screws and cup washers from Airtex - 100 of each for $7.00.

Wlicn doing the snap area in the vicinity of the back scat riser, make a jig or drill guidc by putting something (plastic, metal, whatever) against tlic riser and marking or drilling the existing holes into the guide. (See Figure 2). When the carpel is glued in place. put the jig or guidc against tlic carpet as a help to locate the existing holes through the carpeting.

A little time spent on this guide could save hours later in finding these holes. Remember lo allow enough space between the carpet and the scat rails to allow the scat slides to move easily fore and aft without binding on the carpeting. (see figure 1).

Harsh Hose AD Modified by FAA

The year started off with a bank for Cherokee owncrs in tlie form of an AD which required expensive repetitive inspections of the oil cooler hoses on all models. Most owners felt the AD was overbroad and unduly onerous to Cherokee owncrs. Now. the FAA has agreed.

The original AD required inspection of oil cooler hoses every 100 hours and replacement after 1,000 hours or eight years in operation. It applied to all Cherokees - some in which a problem existed due to close proximity to the exhaust stack - and other models where no real problem existed at all.

Now. tlic FAA has issued an airworthiness information bulletin which permits alternative methods of compliance. Many owners may now comply with a onetime inspection of tlie hoses and, if necessary, replacement of the hoses.

Aircraft with rear-mounted oil coolers can utilize the alternative procedure. while those with front mounted oil coolers must still have their hoses replaced every 1.000 hours or eight years.

To avoid this, owncrs may install an approved heat-resistant hose. Replacement witli a TSO-C53a type D hose will eliminate repetitive oil line inspection or replacement of the hoses whether the oil cooler is mounted at tlie front or tlic rear of tlie engine.

The FAA has suggested that Cherokee owncrs make their mechanics aware of the alternative method of compliance as the special ainrortliiness bulletin was sent to registered plane owncrs only - not to mechanics.

Refinishing Scratched Windows

By Barry Dwyer

I recently had the unfortunate experience of getting a 3/8 inch long by 1/32 incli deep scratch in the middle of a new windshield. I was able to successfully remove the scratch and refinish the windshield to a near-new condition. The techniques arid products listed below should work well for anyone presently peering through pocked Piper plexiglass (in other words, anyone with an airplane more than a week old).

My previous experience with plexiglass scratch removal was with tlie venerable MicroMesh product. While MicroMesh works well. it is very much an art form. with experience being the primary deterininant of success.

The product I used was a Transelco-Satinal Polishing Pad. recommended (and sold) to me by George Mesiarik at LP Aero Plastics. Inc. (412-744-4448). It produced faster, better results with less work and fuss than MicroMesh at about the same cost.

The first step is to clean the scratched area carefully using dish soap and water. Then determine tlic depth of the scratch. Minor abrasions or scuffs arc ones that cannot be felt with a fingernail. These can be removed by wet-polishing with the Satinal pad backed by a sponge-rubber hand sanding pad (3M Part No. 05530).

Scratclics that can be felt with a fingernail need to be wet-sanded out witli tlic finest grade of wet-or-dry abrasive that will remove tlie scratch when used with moderate pressure. Scratclics of a light to moderate dcpth can usually be removed with 2000 grit paper. while ones as deep as mine (1/32 incli) rcquirc 600 grit to start.

Starling with 1500 grit works well: if tlic scratch is not coming out. switch lo 1200 or even coarser (one stage at a time). DO NOT apply more pressure. Once you have found a grit that removes the scratch, sand tlic scratch out completely.

Then, work your way up through finer and finer grits (600, 1000. 1200, 1500, 2000) until you finish tlic area with 2000 grit. Remember to use a sanding pad.

For really deep scratches you can minimize distortion in the sanded area by using a hard rubber pad up to the 1000 grit level, switching to a soft pad for the finer grits and final polishing.

It is critical to maintaining optical clarity that you avoid sanding too small an area: for a single scratch, start out witli about a five inch diameter circle around tlic scratcli and increase tlie diameter about one incli for each finer grit of paper. (In my case. I ended up witli a sanded area about 12 inches in diameter at tlic 2000 grit stage).

It is also important to remove all the sand marks from tlic previous grit before moving tlic next finer one. Use plenty of water!

Once you have worked up to the 2000 grit level you should have a uniformly satin-appearing arca on your window. Wash this well with dish soap and water. then wet-polish witli the Satinal pad. keeping tlic entire arca wet with a spray bottle. (Working inside a hangar is preferable). The Satinal pad will remove the haze left by 2000 grit paper quickly; it may take a couple of rounds of polishing to get a crystal-clear finish, though. Wash and inspect the area and wet-polish again as needed.

The entire process took me about one hour to completely remove tlie scratch from my windshield. I used about

onc-quarter of the Satinal pad and one three-by-three inch square of each of the various grits of abrasive paper. At tliat rate, one Satinal pad (about $12.00) should easily refinish an entire Chcrokcc windshield. One sheet each of tlie wet-or-dry abrasive papers will cost about $5.00 Tor the full range of 600 through 2000 and will probably be enough to refinish several complete windshields.

George at LP Aero Plastics cautioned me that, with a scratch as deep as the onc I had, the chances of having optical distortion in the windshield even after careful polishing were very high. He was right: there is some distortion in tlic five inch diameter area where I used the 600 grit. However, it is minor and will probably disappear with the first few bugs of spring. Otherwise, the windshield looks brand new again and much better than with the gouge out of the middle.

I highly recommend the Satinal polishing process to anyone who is considering refinishing a scratched windshield or side windows. It is inexpensive, fast and produces excellent results. Practice on a piece of scrap plexiglass first and take a deep breath before taking that piece of 600 grit sandpaper to tlie middle of your windshield!

Adjusting Voltage Regulator

Dear Terry,

I have a 1977 cruiser which is charging at about 12.5+ volts so naturally the battery gradually goes down over time. I located tlievoltagee regulator with the thought in mind of adjusting upward according to the manual.

The regulator is not as described in tlie Cherokee Service Manual and is labeled 'Lamar BOO321-2 with a number 484121'. It has a hole marked adjustment and showing the direction of screw rotation for 'increase'. This appears to bc a simple external adjustment with another person monitoring with a voltage meter to aim for 14+volts.

Are there any pitfalls of which you are aware exccpt of course not to go beyond the normal range of 14.5 volts on a 12 volt system? I would apprcciatc an immediate response so I can have your tliouglits before I start adjusting.

R. D. Lindsay
Chillicothc, OH 45601

Dear Mr Lindsay,

Piper recommends a method of voltage regulator setting which rcquircs monitoring rcgulalor temperature, amperage and voltage. In fact. the company lists two methods. described as the "fixed resistance" and the "variable resistance" methods.

Both methods are considerably more complicated than merely turning the screw and looking for an apparently appropriate voltage. The problem witli the shortcut method is that you are merely guessing and. at different power settings. yon may end up with more or less voltage than you planned. You could end up witli a system which does not charge (like yon already have) or you may end up cooking your batter).

Replacing Arrow Gear Switches

By Joe Young

One of the fixes my plane needed during the last year was the micro switches on 8JY's landing gear. I found these to be hard to get through Piper and very expensive.

Jim Garrett's submission to Cherokee Hints & Tips "Switch Part Number; Arrow Gear Problem" helped me get started in the search for a more reasonably priced supplier. However, the part number he listed was either inaccurate, or has been changed.

To find tlie switch, I contacted Charlton Bates in Little Rock, Arkansas (800-482-9313). They informed me that the part number I was looking for was 1SE1 rather than 1SEL. The part number for the actuator arm was correct (JE-I).

Their price for the switch was $32.55, and the actuator arm cost approximately $4.50. The people at Charlton Bates were very helpful and patient as we sorted out the part number discrepancy.

One word of advice: the first switch failed last May. The second failed during the Tall, and I am now replacing the third one in March. Given the age of the aircraft, I probably should have replaced all switches associated with the gear system at tlie same time. The extra expense of tlie switches would have eliminated several heart-sinking experiences during the last year when gear indications were not as the should have been.

Vent Window Weather Stripping

By Bernie Heimos

I installed new pilot's side vent window weather stripping more than two years ago and it still maintains a watertight and more importantly airtight seal.

Please pass it along to other members who have any complaints about leaking or noisy vent windows.

This product is available at most hardware stores: 318" EPDM Rubber Wcatherstrip (318 inch wide X 114 inch Thick X 17 feet long), product number V25B, Frost King, Thermwell Products Co Inc . Paterson, NJ 07524 and Los Angeles, CA 90058

Concerned About RPM Limitation

Dear Terry,

As a new pilot and recent 1973 Cherokee 180 purchaser, I was somewhat dismayed to read your answer to an owner's question regarding operation within certain RPM ranges for Cherokees equipped with the 0-360-A4A engine and Sensenich 76EM8S5 propeller. My plane has the same combinations and yet I have done most of my flying since my December purchase in the "no continuous operation" range, including a trip from Manassas to Houston and back.

My plane has no placard or markings on the tachometer regarding the RPM restriction and, from review-

ing my logbooks, the tachometer is not a replacement. Furthermore, there is no reference to this restriction in my operating handbook.

Am I fixing to get into deep trouble or am I safe?

Sincerely yours,
Mark H. Dyott
Gainesville, VA 22065

Dear Mark,

The origin of this restriction was Piper Service Letter 526 which went out May 15, 1969. It applied to the 0-360-A3A engine with any of several Sensenich propellers specified in the bulletin.

For airplanes which fell into this category, the tachometer was supposed to be marked (with kit 760-325V) and a supplement was supposed to be appended to the aircraft flight manuals.

Obviously, your plane was manufactured after this service letter was created and it does not apply to your plane. Your plane has the A4A engine, which is identical to the A3A engine except it has a solid, rather than a hollow crankshaft. This engine, apparently, does not have a vibration problem (or a problem with sludge inside the crankshaft, either.)

Sincerely yours,
TERRY LEE ROGERS

Piper Tackles A/C Belt Life

For several years POM has carried articles about the short life of alternator belts in some planes equipped with air conditioning. Now Piper seems to have heard the same complaints we have.

Piper has issued service letter 903-A which provides new dimensional data for the replacement alternator belt (P/N 73965-09). The service letter is designed to improve belt life in all air conditioned PA-28 and PA-32 models.

The service letter specifies dimensions for the cross section of the belt and also specifies a method of aligning the idler pulley in the belt plane.

Belt tension is specified to 90 to 100 pounds using a calibrated belt tension gauge. Finally, Piper recommends rechecking this belt tension every 100 hours and resetting to 70 pounds if the tension ever falls below 50 pounds.

Repair That 8-Day Clock

I had the Wakmann 8-day clock from my '69 Cherokee 140 cleaned and serviced for $40. David Rossi, the owner and repair specialist, has much experience with this type of instrument and has done work for the San Diego Aerospace Museum. His business is King Jewelers, 271 1/2 Third Avenue, Chula Vista, CA. Phone (619) 422-2711.

I recommend him to all members.

Unknown Member
On Internet

Some Tips on Older Cherokee

Here are some tips concerning the early Cherokee series.

1) Alternator belt: I recently tried to purchase a new belt without paying Piper's triple markup ($48). Piper's number for early series Cherokees (without air) is 452-541. Gate's PMA number is 73965015. The belt itself is marked GREEN STRIPE 9335 XL or Gates 13A0850. Most NAPA stores stock the belt ($12).

There is a difference! If you buy the belt from NAPA you do not get the small piece of paper Piper staples to the cardboard cover. It says, "Genuine Piper Part - #452-541, Gates Belt - 73965015." The paper may be worth $36 to some owners!

NOTE: The new belt doesn't stretch like the old one did. It appears to be made of different materials. (Stronger!) Don't tell the FAA - they'll insist on an STC and Form 337. Take care not to install the new belt too tightly. Excessive loads can damage the alternator thrust bearing.

2) Control lock: Common practice is to use the seat belt to lock the control wheel. Not a good idea! The Cherokee control wheel has been known to crack. (Should be inspected annually.) It gets very exciting if half the control wheel breaks off when you flare for touchdown.

And, the stabilator will catch rain when tilted up (it can freeze or corrode.) A bungie cord hooked over both wheels and the dash hand locks the controls and tilts the stabilator down.

Better is a custom bungie cord. Use two "S" hooks, about three feet of 1/4 inch auto vacuum hose and two plastic wire ties. (Rig the hose as above and adjust for slight tension before tightening the wire ties.

3) Air filter: Early series Cherokees came with a Fram Ca161PL. (1963 Chrysler Windsor) - extremely hard to find)> NAPA's 2030 air filter will fit (lesser quality.) The better way is a Bracket BA-104 w/BA3 element. (STC). Yes, the silly FAA requires a Form 337, but your net cost will be less.

Wind seal: Piper used "auto wind seal" (63106-07) around the door. After awhile it cracks and exposes the inner rubber hose. Custom auto upholstery shops normally stock replacement "wind seal". It comes in various colors, so you ought to be able to match your interior. Be sure to burn a little before you install it. You certainly don't want any fire hazards in your airplane.

Sincerely yours,
Name Withheld
Charlevoix, MI

Rich Running Fuel Injection

Dear Terry,

I am the proud owner of N2114T, a 1971 Arrow 200B (1,700 hours TT and 500 hours SMOH on the IO-360 engine. I have been plagued with a leaning problem that

perhaps you can help me with.

My run-ups arc always rough unless I lean aggrcssively from start-up and during the taxi (field elevation 780 feet).

By aggressively, I mean within an inch of the idle shut off position. In cruise (at 5.000 to 7,000 feet), I have been leaning to 50 degrees rich o i peak and consistently getting handbook performance (i.e., 140 knot cruise at 75 percent power. But at my last annual. a cracked cylinder was found and attributed to over leaning.

In addition. several months before my last annual. I lost powcr in cruise bccausc a spark plug cracked (and the second fouled) which was again attributed to over-leaning. Since my last annual. I have been leaning 75 to 100 dcgrccs rich of peak arid have noticed a performance degradation and increase in fuel consumption from 10.8 to 12.1 gph.

Docs this make sense to you? Should I consider an engine monitor and, if so, which do you recommend?

I'd prefer to avoid tlie expense. Pcrliaps a more sophisticated fuel-flow gauge can be installed?

Sincerely yours.
Michael Granet
Cumberland, MD 21502

Dear Mike.

The Bendix fuel injection system is a bit complicated. but it generally performs well without problems.

The biggest problem with the system is the center body seal which allows fuel to pass from tlic fuel to the air side of the regulator. Fuel comes out of the impact tubes and the system is too rich. This may be your problem.

You cannot control this by adjusting tlie "Mixture" control or the linkage. Tlic linkage controls IDLE niixturc only. Adjusting tlic linkage will do nothing lo solve the problems at altitude or at high powcr settings. The condition. if it has been in existence for some tirnc. will show stains at the impact tube.

Another check your mechanic can make is to block off the line to the flow director and run the fuel pump. If fuel drips from the impact tubes. the seal is defective. The onlv cure is to replace tlie regulator section.

Several companies make engine analyzer systems and tlicy arc a good investment. But they will not solve your over-leaning problem. Fis the problem first and then consider adding instrumentation to help you more closely monitor the condition of your engine in the future.

Sincerely yours.
TERRY LEE ROGERS

Early Model Cherokee Upgrades

By Greg Illes

My 235, N8581W, is nearly dirt-simple: fixed prop, fixed gear. basic IFR panel (two VORs, glideslope, markcrs). and fairly decent condition for a 32-year-old airplane with ten owners in its history.

Problem was. it LOOKED kind of old-fashioned (on tlic inside), and I got it with only the single handbrake - no toe brakes on either side. It had the ancient old bow-tie yokes, and the panel wasn't standard-T; I kept going crosscycd looking for tlic turn and bank where there was an altimeter. etc.

Mission #1 was to gel rid of the old bow-tic yokes (and their AD 69-22-02) and put in some modern ram's-horn style yokes. Piper even has an SB on doing it. Unfortunately, my yokes were tlic early 0.75 inch column, and the SB called out new yokes for that column diameter; I really wanted the larger late model columns (1.125 inches).

Also. Piper wanted ridiculous sums for the yokes. about $700 each, and used 1.125 yoke refurbished assemblies wcrc available from Wentworth, so into 337 land I went. Our local FSDO guy is a pretty decent sorl, and I rcvicwed in advance with him what I had planned (with my IA of coursc).

Tlic conversion was pretty straightforward: I bought the yokes from Wentworth for $600 the pair. cornplctcly refurbished with black powder-coat, columns, and all tlic new bushing pieces. I removed the old yokes and enlarged the panel cutouts and drilled new mounting holes, using the bushing plates as templates. The only obstacle turned out to bc an amazingly resistant bushing-to-U-joint fit, requiring heating, honing, and several hours of cursing (my strong suit) to get properly joined and aligned.

The result is cvcn better than I had anticipated: the yokes are gorgeous. thcy make tlic cockpit more modern-looking. and they glide more smoothly than the old 0.75 columns cvcr could. The mike switches are mounted in the yokes and the wires go inside the columns to the back side of the panel for wiring into the audio circuits. An added bonus is that the new position of the yokes eliminates tlie right-liand yoke from hitting the mixture knob when it was at full-lean. a minor irritation. And of coursc the 50-hour recurrent AD no longer applies.

Some caveats for anyone trying this mod: watch out for tlie inevitable metal chips from the rework; 1 used a vacuum cleaner with a 5/8 inch heater hose taped lo tlic end

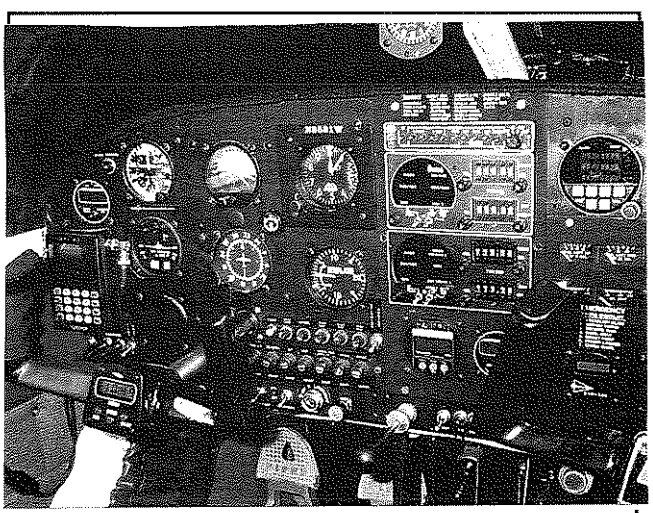

Panel Has Military Look-Note Lack of Plastic

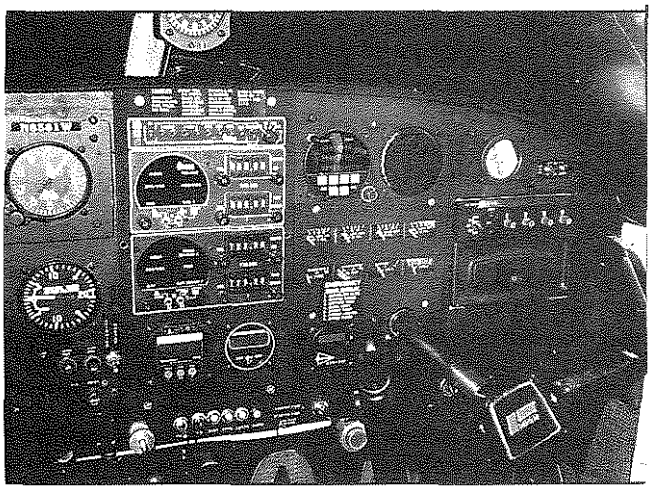

***View** of Right Hand Side of Redone Panel*

to constantly clean up any chips kicked out by my tools. Also. when wiring tlrc mike switches in. be EXTREMELY careful about routing the wires out tlic hole in the large column, and move everything back and forth and from stop lo stop in all directions to check for catching or snagging.

Mission #2 was to rearrange the panel into a standard 'T' configuration. Those with pre-1968 Pipers can apprcciatc how different their panels arc from the more modern planes.

The task was really much simpler than I had anticipatcd. and involved enlarging tlrc clock hole from two inches to three inches to accommodate the DG. then relocating the stall warning light.

The old AN horizon hole had to have an adapter mounted to it (got one from Spruce), and then it was just a matter of playing the "shell game" with the altimeter. VSI. horizon, DG. and turn/bank, and re-plumbing the pitot/static tubes.

Voila! A standard T panel, albeit with the bottom instruments slightly slanted downward from left lo right because the original horizon hole was so much larger than standard three inches.

Oh yeah, the cheap plastic panel overlay saw its last day, it wasn't worth chopping il up to fit the new hole sires. The bare panel needed some flat-black paint and some holes plugged up, but it came out pretty decent, and that stupid lip on the top of it was never much of a glare shield anyway. Wit11 the lip gone, the over-the-nose visibility is slightly improved, and the panel now has a slight military look, which appeals to me.

A checkout from my IA, logbook entry, and 24-month pitot - static check, and the panel was very functional. (I still want to do a full-width aluminum 0.125 inch thick engraved panel overlay to pretty it up, but that will come later.)

Mission #3 was to install dual toe brakes. At first. we thought that this was just going to be a nsatter of buying some standard parts and bolting them in. Hmmm, big learning curve ahead.

My serial number is 10093, and Piper didn't start offering toe brakes until 10487. What they left out was the brace on the engine side of the fircwall to take the thrust from the brake cylindcrs. which rise up from the rudder bar pedals to mounting points on the inside of the firewall.

Unfortunately. I didn't learn about this situation until the old brakes wcrc ripped out and the new ones wcrc going in. Also, in addition to the brace, the new rudder bar needed a complete new set of ruddcr bar mounts, Jirn at Wentworth was an absolute prince the entire time. sending me additional or replaccmcnt parts and basically acting like a partner in the enterprise. I have just EXCELLENT experience with Wcntworth and can recommend them quite highly.

How my mechanic cvcr got that firewall brace installed without pulling the engine is beyond mc: he did it while I was at work - in 6.5 hours. A superb job.

The rest of it went smoothlv except for the final stage of the installation. when we round that the new rudder bar didn't align to the old ruddcr trim mechanism. As 1 researched it. I found that if I replaced the ruddcr trim mechanism ($400 more), I would then have to replace the trim housing. interior trim, and perhaps the rest of tlrc airplane before the domino effect ended. More phone calls. FSDO conferences, IA conferences, and eventually a modification to the trim mechanism to linc up to the new nrdder bar tab.

This was enough to warrant a visit to the airplane by the FSDO rep, and he liked what he saw and approved the mod.

The tab was about $3.100, plus another 80-100 hours of my time cleaning and painting, researching, coordinating with my mechanic, FSDO, Pipcr. and doing some of tlrc installation work. About $2.000 labor for my mechanic's shop, and about $1.300 in parts including rebuild of the cylinders, new hoses, the used rudder bar & mounts & pedals and pieces, plus lots of shipping fees and some documents from Pipcr.

Sure is nice to have brakes.

I have lots more done to it and lots more planned for it, I'll keep you posted.

Rebuilding Those Fuel Valves

Many Cherokee owners find they arc in a bind when their fuel selector valves start to leak. New ones are expensive and it is hard to find a re-builder.

Well. Torn Block. contributing editor of Flying Magazine and the owner of a Cherokee 235. recently researched the problem and came up with a few resourccs.

Like many such stories. there is good news and bad news. First the bad news: certain selector valves are not being built new nor are they being rebuilt - these owners are out of luck.

But most Cherokee owners will find help available. First of all, the valves are built by Shaw Aero Devices in Ft. Myers, Florida (941-768-5644). But don't call asking them to send you a valve - they can only sell valves to Piper - you must purchase them from Piper directly, not from Shaw.

More bad news: these valves are expensive. The four-tank valve for a PA-32 or a 235, for example, runs about $3.000 from Piper.

Now the good news: B&S Aircraft in Wichita, Kansas. will overhaul these fuel valves. Their price for the same four-tank valve: from $475 to $550, depending on parts required. And yes. B&S will deal with you directly They are at 900-835-2961.

Thanks, Tom, for all the detective work.

Landing Gear Motor Problem

I am a CPA member and I have a question lor ya. I have a 1967 Arrow and have been csperiencing on and off gear problems. Every once and a while the gear won't retract or deploy. My AI has finally tracked the problem to the motor. Do you know who does motor and pump repair...I know my AI is going to check with "Air Parts" in Lock Haven first, but any othcr suggestions would be greatly apprcciated.

This gear problem was difficult. I could go for weeks and the gear would work great. Then out of the clear blue sky. the gear would not deploy. So it was very intermittent at first but got to tlie point it was doing it on a frequent basis. We first thought switches were at fault but this was not the case.

Thanks in advance lor any help you could give,
James Kohler
Skyking1@gnn.com

Dear Jim,

The only one I know who works on these units is Air Parts of Lockhaven (800-772-3117). Some members liave indicated that they have local automotive electrical repair stations do the work - generally only the brushes are replaced and they arc available.

But this assumes that the problem is actually in the landing gear power pack - not in one of the limit switches or other electrical components in the system.

Sincerely yours.
TERRY LEE ROGERS

Wants Door Seal

Dear Terry,

My 1978 Lance is going to be painted in the next month or two. The rear door seals leak and the front scal whistles. It is to bc expected these seals would be a little tired after nearly 20 years.

My intention is to have all the seals replaced. Based on your experience is there a particular seal which is superior'! Is there also a seal which should be avoided'? From what I have heard tlrc inflatables seem like more trouble than I want to take on.

Sinccrcly yours.
Ellison L. Davison
Gihsonia. PA 15044-9723

Dear Ellison,

Some of the older Cherokees used a seal which was veryprone to leaking. However. newer planes, such as yours. came with an improved seal from the factory. Frankly, with your seal giving relatively good service for 20 years, I would say stick with the factory version.

The big problem with installing any seal is taking the time to "work the seal. The door simply does not come with a great fit and you need to insure that the seal is more plentiful in areas where there is a greater gap and stretched tighter in those areas where the gap narrows It takes a while, but you can get a really good fit dyou take the time to do it right.

Sincerely yours,
TERRY LEE ROGERS

Nosewheel Shimmy; Radio Fix Found

Dear Terry,

I have seen many comments in these pages about nose wheel shimmy, suggested cures and frustrations. We tracked down and fixed the nose wheel shimmy on my Cherokee while doing the annual; it was a simple procedure we call "fixing the mains." While servicing the oleo struts we detected a slight but noticeable flex in both of the main gear. So we installed new bushings and hardware in both torque links and everything smoothed right out.

On another subject: radios. We just greatly improved the performance of both COM radios. the transponder and DME and it didn't cost a dime! The degradation was so slow and intermittent (over a three year period) that nothing ever stuck out like a sore thumb. However, the one constant clue we were getting was comments from controllers that tlie transponder return they were seeing was "in and out," sometimes great, sometimes not at all.

When wc finally decided something had to be done, we began by checking all the usual things, the edge connector at the rear of the transponder tray, the coax connector at the rear of the tray, the BNC connector on the coax and its receptacle on the transponder, the BNC connector at the antenna end of the coax. the antenna itself for bent or broken parts... but everything was A-OK.

My background as a ham radio operator and broadcast engineer made this poor performance twice as frustrating. But something I learned in my broadcast days came to mind - check the simple stuff first.

So-0-0, we snugged up the mounting hardware on tlie transponder antenna... and that was the cure!

We went for a ride and received solid transponder reports from lower altitudes 30 miles away, solid Mode C reports, too. About antennas: I think most on our Cherokees are quarter wave unbalanced. Quarter wave is acertain length for a certain frequency and it is found using a simple math formula. Unbalanced means this quarter wave element is worked against ground (mounting surface), and the mounting surface is as important to signal performance as the quarter wave element itself.

Connection to this "ground plane" point with the antennas on my airplane is by way of the outer part of the BNC connector, which ends up being the mounting base pan of the antenna. If the point where the antenna and mounting surfaces come together isn't clean @are metal to bare metal) and tight, then the ground plane effect cannot be established, thus poor performance.

We cleaned and tightened the other antennas, too. The DME, which previously had gone from intermittent to not at all. immediately began working 100 percent. Good news for the COM antennas, too. What had been a 4-112 mile range for a PCL unit became 15 miles, maybe more (I haven't taken time yet to see how much more), and that slight amount of ignition noise in my headset is gone now too. Tight antenna connections are as important as tight battery connections.

Sincerely yours,
A member from Des Moines

Another Reason For Ammeter Flutter

By Robert Kane

I am reporting an experience which seems at variance with the descriptions in tlie chapter "know your charging system" in your Cherokee Hints &Tips.

I have had two separate occasions ofrapidly (more than one per second fine fluctuation of the loadmeter (ammeter) needle of my Lance. In each case, the master switch was ok: the problem was the overvoltage relay.

Apparently. the more modern electronic ones do have the capability ofresetting. On page 63. the author states that this device is "usually a non-resetting relay." By resetting itself. the condition is perpetuated. Also. there appear to be several upgrades occurring in this relay giving enhanced (?) performance.

Sincerely yours,
Robert Kane
Venice. Florida 34285

ELT upgrade; Airwolf Remote Filter

By Greg Illes

My 235 came with a junky old ELT-in-a-basket — a poorly installed affair loosely screwed into the baggage compartment wall, with an interior antenna which tnay or may not ever have been able to broadcast my position when needed. In addition. the unit was metal and square-edged, so it caught and/or gouged everything put into the baggage area. Lastly. the batteries were the old custom setup, $40 every two years to replace (no big deal but irritating).

So I decided to replace it with a modern D-cell type. There are units out there from $169 to over $700, but Tor what I needed, it was a toss-up between the Ameriking AK450 and the ACK and Artex units, all around $200. I picked the AK450 because it had the mike plug for broadcast voice.

I found out later that the Artex has a smaller remote panel, which fits easier into limited instrument panel space, but I found a spot anyway.

The battery for my Cherokee lives on a sturdy structural platform just behind my baggage bulkhead. and there was gobs of room to put the ELT there. As sturdy as it was for the battery, it still needed a cross-brace under the surface to make the ELT mount really brick-firm. This was an easy fabrication, just a piece of aluminum angle bolted under tlie unit crosswise to the lengthwise rib already in place.

The antenna mounted right overhead of the unit position, and although it was near a reinforcing bulkhead. it still required a doubler in the skin. Antennas can be up to 45 degrees off vertical, so I bent a slight angle in it to match tlie angle of my comm antennas, and it looks great.

The remote panel was the biggest work. because it has to be cabled from the ELT to the instrument panel. and that needed the side panels removed, which needed the scats removed. Also. in a 32-vear old airplane. some past sins had to be reconciled, so I did a fair amount of rerouting and reclamping of existing wiring. I found a little spot in the upper right of tny panel where almost nothing else would fit anyway, and carefully routed out a cutout for the ELT remote panel.

I put some captive instrument nuts on it and in it went. It connects using what LOOKS like a standard phone cable, but it isn't so don't try it, the pin-to-pin connections are different. If your cable is too short, build another which is wired pin-to-pin, not left-to-right like a telephone cable.

That's about it - - I waited until five minutes after the hour and ran the tests called out in the book. entered the installation in the logbook and had my IA check it out and sign it off.

My total cost was around $220 because I needed some screws and clamps while 1 had everything apart. If I had paid someone, I think it would probably have cost about six hours or more. at a shop rate of perhaps $50. for another $300

Airwolf Remote filter

My old 0-540 B2B5 doesn't even have a filter at all, just a screen. mandating a change every 25 hours. Also. it makes a hell of a mess to clean that screen, dumping oil all down the back side of the engine where it is most difficult to clean. So I wanted a filter. and I wanted it vertical so it wouldn't dump its oil all over the placc.

I picked the Airwolf over the ADC unit mostly for the mess situation. The ADC has a finer screen and a chip detector, but it makes the same (or worse) mess as my oil screen when changing or inspecting.

This is really a piece-of-cake installation except for one hitch: there is usually not a really sturdy place on the firewall and a doubler or reinforcement plate is almost always needed. I used a triangulation scheme where I mounted a plate from the top of the filter bracket to tlie cross-brace on the firewall.

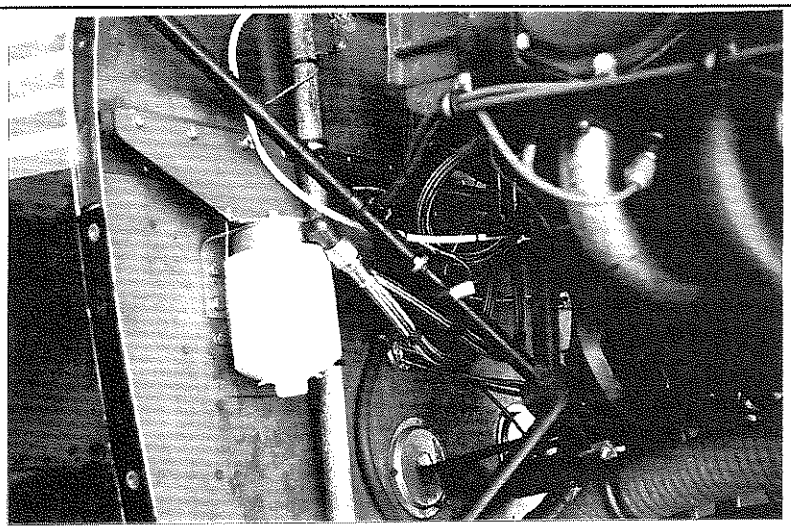

Airwolf Remote Filter Makes Neat Installation; Easy Oil Changes

This not only stiffens tlie flexure of tlic firewall, but also limits the rotational pivoting of the bracket itself.

Still. bolting everything through the lircwall is a one to two hour job for me and a good friend. and I had to get UNDER any fireproofing or soundproofing on the inside of tlic lircwall. past tlie brakes. past tlic cables, past tlie wiring. and around all the bolts and brackets.

Needless to say. I studied it very carefully bcforc I picked a spot.

The engine mod is the simple part: tlic Airwolf adapter bolts right on and all the fittingsfit. and once everything is in place, I just measured for Iioscs. ordcrcd the right length and put them in. I chose to install everything except tlic adapter until the last minute. which allowed me to keep flying, order the hoses, and then change tlic adapter and install the hoses in a half-day.

Total cost. about $550. Time overall was probably 8-10 hours including one of a friend's to do the bolting through the firewall. It works great, very clean oil changes and Lycoming will allow changes up to 50 hours apart (or four months) with the filter in place.

One final mention: tlie STC on the Airwolf allows only for Airwolf filters (Champions with an Airwolf sticker on them as far as I can tell). These arc $2-3 more espensive than Champions and have to bc mail-ordered. The local parts store guy tells me that "everybody runs Champions" but strictly speaking it's not allowed. Airwolf says they arc working on Champions for the STC. but tliat would seem self-defeating, so we'll see.

Questions On Piper Shoulder Harness

Dear Terry,

I own a 67' Cherokee 180C and I am considering adding shoulder harnesses. I understand Piper makes a nice kit. but it requires structural additions above each rear window. Do you know how many hours this kit normally lakes to install and inost importantly, do the structural additions require any riveting through tlie outside skin? I just had my plane repainted and I would be reluctant to add anything tliat would require touching up.

Sincerely Yours
Tim Averett
Compuserve

Dear Tim,

Pipei indicates tliat eight hours of shop labor is required for installation of a pair of shoulder harnesses. although at least one member has indicated tliat installation in his plane rcquired twice that. There is some meticulous lilting required to get thcjob done.

In addition, approximately 12 rivets do need to be placed through tlic csterior skin of the plane. These can bc covered with touch up paint, of coursc. but it still may affect the cosmetics of your plane.

Weighed against cosmetics and cost, of course. is the additional safety which shoulder harnesses offer.

Sincerely yours.
TERRY LEE ROGERS

Company Can Repair Heated Pitot Tubes

Air Parts of Lock Haven received FAA approval for its repair shop to redo blade-type heated pitots. The tubes are stripped, cleaned inside and out. alodined, pressure and static tested and new heat elements arc installed.

Prescnily. Air Parts of Lock Haven is turning tlie units around in 48 hours. For more information contact George McKinney at 717-748-0823

Some Comments On Cherokee ADs

By Christopher Ulibarri

I recently completed my annual as I am not only a pilot but an A&P mechanic. "Hints &Tips paid for itself as I used it to research areas I was unfamiliar with on tlic Cherokee. I learned quite a bit just by thumbing through it and looking up specific topics. such as the wing AD. engine oil cooler lioscs, wing flaps and many more subjects I was concerned with as I did my annual.

I recently completed several ADs that I would like to make comments on:

AD **95-26-13,** oil cooler hose inspection and rcplacement I replaced my old hoses with TSO-C53a Type D hoses manufactured by Specialty Hose Aerospace. 7802 Freedom Ave. NW, North Canton. OH 44720. I was very plcascd with the quick response and exceptional help by Mike (they don't give out last names). He was very helpful and certainly gave me a price I could not turn down at $85.31 each (P/N 63901-72). With freight and handling the total was $189.62. Not bad and economical as I may have delayed

replacement if I had gone elsewhere. I have been flying with my new hoses and have not had any problems with leaks or damage and I can fly with confidence that they have been replaced and do not have to worry about old hoses anymore.

AD **96-10-1**, landing light seal and support assembly. I went through our local FBO here in Abilene, Texas, Abilene Aero, Inc., to order these parts. No difficulties installing them, however, do follow the instructions in Piper Service Bulletin No. 975. If you do not remove the round rivets and install the flat rivets you will not get a good scal around tlie landing light because the landing light support, item #4 (PM 85174-02) does not install flush. Order seal retaining ring. Item #8 (P/N 63186-40) instead of P/N 63186-37. P/N 63186-40 is a recommended suitable substitute. It is thicker and will seal your light better.

Beware of the grommet, item #10 (PM 434-136), that comes installed in tlie landing light support (item #4 mentioned above) as mine was brittle and cracked when I went to install the wires through it. I replaced it with a new grommet. The main purpose of this AD is to replace the old seals with new ones and is because the old ones were becoming cracked and brittle, causing them to be ingested into the engine causing engine failure. I would not delay this AD very long if you do not have lo!!!

AD **96-10-03,** replace the flap handle attach bolt (clevis) and associated hardware. I found that the hole for the clevis bolt was elongated somewhat but not beyond the .316 inch diameter, as per tlre AD. 1 followed the instructions in Piper Service Bulletin No. 965 and replaced all the hardware and installed the bushing without any problems. Hope this information helps someone out there.

The service bulletin. however, does leave out an important step of releasing tension by disconnecting the large flap spring attached to the bicycle chain assembly and sprocket attached to the cable you need to get access to it in order to disconnect the cable from the old clevis bolt. It was easy as all you have to do is pull forward on the spring with a gloved hand to disconnect it from the forward hook, then merely allow the flaps to be lowered while you hang on to tlic spring. DO NOT let go of tlie spring until the flaps arc all the way down or they will slam down without the spring tension. Now you can access the clevis bolt. cable and hardware.

CAUTION: be careful to prevent any debris from falling down the access hole and ensure when you install your new flap handle assembly not to interrupt the flight control there that you will see when there is nothing in the hole. While I had my flap handle out I found it was a great opportunity to repaint it once I drilled the new hole.

Isham Extended Wingtip Mod Report

By Barry Dwyer

This summer I installed a set of Isham/Globe Fiberglass extended wingtips on my 1968 Arrow. These are the units that increase the span from 30 feet to 32 feet 2 inches, the same as on the fat-wing Arrow II. They also incorporate Whelen recognition lights.

First, these arc expensive units, at $1885. This price does not include the required nut plates (52), rivets lor same, circuit breaker or switch. They arc very well made, though. and weigh accordingly: 17 pounds each. for a weight penalty over the stock tips of about 23 lbs.

The manufacturer claims these tips will provide decreascd T/O ground roll, lower stall speed. 150 fpm climb rate increase, 25% reduction in power-off sink rate and, in conjunction with the dorsal fin kit (which I don't have), a 6-8 mph speed increase.

I can confirm that each of these claims is accurate, within the limits of my flight testing. The airplane definitely gets off the ground quicker and feels much more solid in ground effect and at low speeds. On the day I did my flight testing an inversion to 9000 MSL made timed climb tests impossible. However, I've flown with the tips for almost 50 hours now and can verily at least a 100 fpm rate increase.

Approaches arc definitely flatter and the airplane floats a bit morc at the usual 70 KT fence speed. Greasers are easier too, with more wing working in ground effect.

The biggest difference is the effect the extra span has on roll damping and, in turn, the ride in turbulence. I expected the decreascd wing loading to make the airplanc ride worse in bumps. Not so. What loss there was in wing-loading-related ride is more than made up for by the roll damping. The airplanc exhibits almost no tendency to roll/dutch roll in light turbulence.

IFR flying is easier and cross-country flying is less tiring. too. The "little" Arrow feels like a much larger, more solid airplane. As a bonus, the wing leveller works better.

The down side of the roll damping is, well. the roll damping. The roll rate is noticeably slower. I've got Knots-2-Ugap seals, which tweaked the ailerons considerably. Witli the longer tips. roll response is still better than the stock Cherokee. I'd hate to put these tips on an airplanc without gap seals. though. It'd roll like a Mooney.

Speed below 3000 MSL at higher IAS (where parasite drag is a bigger factor) seems to have suffered about two knots. At 5000 feet it's about where it used to be with the short tips.

Tlie big speed advantage occurs at and above 10.000 feet, where flight testing has established a five knot speed increase. In addition, the airplane feels "solid at these altitudes, a significant improvement over the "balancing on a beach ball" feeling the stock wing produced up high. Altitudes above 10,000 feet will now bc practical at all but the highest weights on the hottest days (where the little Lycoming will give up before the wing does).

The 35 watt recognition lights make the plane much morc visible at night, particularly when connected through a PulseLight system, as I have done. Although they're not quite powerful enough to call "landing lights" they produce enough light to make taxiing and the first part of the takeoff or the last part of the landing roll easier, particularly on wide runways.

Globe Fiberglass was very helpful throughout the installation. answering plionc calls, faxing installation material, supplying parts lists, etc.. in spite of tlie fact that I had bought these tips used. For the price. though, things like hardware, a circuit brcakcr and landing light split switch ($30 from Piper!) should be included.

Weight penalty notwithstanding, 1 think thcsc tips will make a better airplane out of the Cherokee Arrow. Arc they worth tlrc money'? Probably not, unless you're planning to keep the plane until you die or, like me, you can find a set of the tips used at a bargain price.

Sincerely yours.
Barry Dwyer

TCP Availability; Hooker Harness

By Karl Collins

Thank you for tlrc phone number for ALCOR. I talked with a great guy there named Jim Collins. He told me their price was $20.40 per quart, but that I should contact one of tlie "wholesalers" like Aircraft Spruce East, in Atlanta. I did. and their price is $15.75 per quart. Just thought you might like to know, for future reference.

Hooker Harness has gone to $25 per seat for their shoulder harnesses now. and they say shipping will be about $5. (Hooker Custom Harness. 30 E Jefferson St.. Freeport, IL 61032 815-233-5478).

Increasing Speed in Cherokees

By Bill Daileda

For those who have the need for speed but do not know wlicrc to start I have a little advicc I was in the same position when my wife bought me a stabilator gap seal kit for my birthday.

I looked at the simple piece of aluminum and the hand full of rivets. I could not figure out how this was going to make my PA-28-235 go any faster. After I installed the kit we took our first test flight. I could not believe the difference and my wife was impressed witli my smooth landings.

Now, how did this make such a difference? When the gap between the stabilator and tlie trim tab is sealed, tlie airflows over tlie tab instead of going into tlie gap. Now you use less trim which gives you more *speed* due to less drag. The trim is approximately one third of what it used to be before.

Afier mods are installed. it is necessary to make a few test flights. All of my customers witli speed mods have rcportcd a change in handling, climb, landing and *speed.*

Every time I am asked if speed mods work. I have to say yes. When asked where to start, I always recommend the stabilator gap seal kit. Everyone who knows mc can see how proud I am of our 235. so I am asked these two questions often. All of tlic mods I have installed on "the yellow money bucket" (the loving name I call our 1968 yellow 235) have helped. We can now out fly our low wing man who flies a Mooney M-20E which is heavenly modified. Over the last three years I have increased my speed by 15 knots. Most of my kits were installed one at a time because birthdays. Christmas and Father's Day only come once a year.

We have our own shop in Carlsbad. CA and have installed all types of mods on all types of aircraft. I bclicve in these mods. I have installed all the speed mod kits for our airplane from Knots-2-U and the Fancy Pants from Laminar Flow.

Out latest mod (just completed) is a one-piece windshield. Although I cannot count this as a speed mod, it has sure given us a brighter outlook.

Cherokee 180 Propeller Query

Dear Terry,

I have a '67 180C. I found out my propcllcr doesn't comply with tlie recent AD. Even though it was overhauled just two years ago, it docs not have the " K stamp in its serial number. Sensenicli has told me that the only ones certified to add this stamp and comply with the overhaul is Sensenich itself A full service prop shop is not authorized to do this AD.

My prop is the original and was slightly bent and overhauled sometime in the 70's. My fear is that it will not have enough material lo survive another overhaul. I hate to waste money on a prop that is already near or at limits.

I am considering just buying a brand new prop and using my old one for tlrc wall. I downloaded from the Sensenich web site , a Windows program that shows whiclr props go with wliicli airplane. For my 180C they show a 76EM8S5-0-58 (climb) and a -60 (standard).

My current prop is a -60 (standard). Archer's can use a -62 (cruise) prop. My question is can I legally put a -62 (cruise) prop on my plane? I don't see why not. as it is the same propeller except for tlic pitch. The engine is the same and I also have the solid crank. I'm going to check witli my mechanic. but it shouldn't be a problem, right?

Sincerely yours
Tim Avarett

Dcar Tim,

Yes, a 62 would bc OK on your plane. Sensenicli manufactures both tlic 58 and 60 for your airplane. But a prop shop can rc-pitch your propeller for additional speed or climb capability. The prop shops I checked with indicated that on a Sensenich propeller you could vary the pitch plus or minus about four inches from the cruise configuration.

Sinccrcly yours,
TERRY LEE ROGERS

Cylinder Head Temp Question

Dear Terry,

I have replaced the #2 cylinder on the O-540-B2B5 installed in my PA-28-235. I installed a spark plug gasket

thennocouple and gage to monitor temperatures during break-in. We are seeing 500 degrees C during climb and low 400's during cruise. Is this normal? What is the desired or designed temperature supposcd to bc? Some "engine" people tell us that a gasket type thermocouple will read higher than an inserted probe. Any guidance gratefully appreciated.

Question Rcceived
Over Internet

Dear M9200N@aol,

The Cherokee 235 does suffer from a tightly-packed engine compartment and has a tendency to rnn a bit hot, especially during hot weatbcr and during climbs. This is one engine which could have used cowl Paps. It is also normal for engines to run slightly hotter during break-in, as piston rings wear rapidly.

And yes, spark plug gasket thermocouples do read higher than an inscrted probe. The amount varies from engine to engine. I know of no comparison made on the 0-540 engine, but in the case of the 0-470, for example, the maximum head temperature is specified as 525 degrees at the spark plug gasket and 450 degrees at tlie inserted probc. This should give you an idea of the type of difference which you might expect.

In your case, I would not worry too much about the temperature, but I would monitor it and try to keep the speed up during climb out. especially on hot days.

Sincerely yours,
TERRY LEE ROGERS

Cherokee 6 Questions

Dear Terry.

I'm in my first annual on a 1965 PA-32-260. A couple of things liavc come up that I thought members may have come across before.

1. Is there a reasonably priced alternative to the Pipcr shoulder harness kit? It looks like the kit is currently $522 per seat. I'd like to have tlie addcd safety of shoulder harnesses, but at that pricc plus the labor, It is not very affordablc. I suspect if the kit could bc done without inertia reels a good part of tlie price could be reduced.

2. I have a fiberglass spinner. The type certificate only shows an aluminum spinner. My fiberglass spinner is in good shape, but is difficult to install so that it doesn't wobble. It has no support othcr than the mounting plate at the rear. Newer spinners also have a forward bulkhead mounted to the prop hub to keep the spinner from wobbling.

A) is the fiberglass spinner still legal since it is not listed in the TC?

B) is there supposed to bc a forward bulkhead to help support the fiberglass spinner (mine has no screw holes, no chafe marks to indicate there ever was)?

3. Most of my overhead eyeball air vents arc missing the rubber valve so they can't shut off. Pipcr only sells a complete unit at about $130 each. Is there any way to repair or obtain replacement air valves for less money'?

4. The front cowl pins in a friend's Cherokee arc worn to the point of being unsafe. Do you know ofanyonc who can replace the pins (most shops he has asked have practically laughed at him)'?

5. Can an access panel be added to the fiberglass rear baggage bulkhead so that removal of the whole thing can be avoided for ELT access and inspections. Is an STC required to do that, or does it fall under legal interior mods. Has anyone done it?

6. Are there any STCs for adding access pancls on the wing or stabilator for corrosion proofing. The two meager access holes are hardly sufficient for getting the ACF in.

7. Any lips on scaling leaks? My floor is wet by both doors and in the rear baggage. The headliner insulation was wet in several spots.

Sincerely yours.
Ray Andraka
16 Arcadia Dr.
North Kingstown. RI

Dear Ray,

Starting from the top, here are some answcrs to your questions:

As to shoulder harnesses, although Wag Acro manufactures a shoulder harness kit for the PA-28. they do not offer one for tlie PA-32 series. Piper's kit is the only one currently approved for your plane.

For a spinner to be legal it must be either listed on the TC or it must have an STC. Unfortunately. from the information you provided it is not possible to determine the legality of yours, but it is certainly open to question. If replacement is needed I suggest you contact TCB Composite Company at (904) 778-1477. They can provide you a spinner and bulkhead at a competitive pricc and without an extended back order time. All the calls I have received about the company's products have been highly enthusiastic.

I know of no source for the older-style overhead vent units. You might try repairing it yourself, but you may consider Piper's price worth avoiding the nuisancc of having to deal with it.

Cowl pins arc a problem in older Cherokees, especially PA-32 models. The pins and connecting plates do wear oat and should be rcplaced. Although it is a time-consuming and difficult job, it should not be beyond the expertise of a good mechanic. Unfortunately. most pilots simply ignore the problem and, occasionally, a cowling departs an aircraft in flight (one member even ran an ad in the magazine - one had landed in his back yard and he wanted to return it to the owncr.) Besides being expcnsive, this could also result in a serious accident if a departing cowl destroyed either a windshield or the tail feathers of a Cherokee in flight.

Access panels in the rear bulkhead fall into a murky area. It probably docs require an STC or othcr FAA approval, although I liavc seen some pretty neat ones installed. probably without proper papcrwork One owncr installed a panel which mounted in place with velcro and made inspections extremely easy. The problem is that an AI, sometime down the line, may decide to ground a plane with such an unau-

thorized addition.

Access panels are available for the wings from Piper (kit 765-106V). They arc available for both the PA-28 and PA-32 models and instructions are given in Piper Service Bulletin 789A. No such kits arc available for the stabilator, but generally you can get to most surfaces to corrosion proof the stabilator without additional plates.

Finally, leaks. This has been probably one of the biggest areas of concern among Cherokee owners. The book, Chcrokcc Hints & Tips. lists 16 separate articles on the problem. Unfortunately, there is not one single solution. General advice usually is to utilize a garden hose to find the source of the leak before trying to fix it. As much of the upholstery as possible is removed and you then try to find tlie entrance point while an assistant plies the outside of the craft with water. The process is difficult because water often accumulates at one place but comes into the aircraft at a distant point. Finding the leak is not usually a fun process.

Sincerely yours,
TERRY LEE ROGERS

Cherokee Plastic model

By Stan Zamkow

I have been searching for a model of a Cherokee. My thanks to Paul Gould wlro provided the clue to a model supplier for a PA-28.

Chcrokcc and Cub models made by:
Minicraft Models. Inc.
1450 W 228th
Torrance. CA 90501
(310) 325-8383

The Chcrokcc model is #1610 and costs $8.50 + 2.75 shipping. Minimum credit card is $15 (so I bought two), but you can send a check if you only want one. They usually only sell to distributors, so they can't tell you where to buy one locally

A 181 Second to None

By Ken plesser

There seems to be a glut of articles these days on sprucing up your old airplane. Not surprising, since it is quite possible to own a plane that is a good as (or better than) new for a whole lot less than the price of new. The folks at AOPA had a project plane called the "Good as New 172," which was basically a cleanup of a tired old airframe, Next, they decided to create the "Better than New 171" by handing blank cliccks to paint shops, intcrior shops, engine sliops and avionics shops to create a 20-year-old airplane that is nicer than the factory cvcr dreamed. And they succeeded.

This article is about doing the same thing, but without the blank checks. In it we will explore ways to make your Cherokee better than it ever was, but achieving it with sweat equity and the kind of tender loving care that only a proud owner can provide. Most of the emphasis here is on the interior work with a little bit on the exterior.

In the course of refurbishing my 1978 Archer II I have done a lot of research and learned a lot that I hope will be useful to other Cherokee owners.

Interior **Plastic**

If your plastic is structurally disintegrating. you will need to go to Heinol (903-534-1897) or Kinzie (405-327-1565) or Plane Parts (310-542-1702), but otherwise it's amazing what you can do to restore the luster to faded and discolored plastic trim at a very minimal cost.

First, remove all of the trim and bring it home; this is no job for tlie hangar or the ramp. Be sure to label or number all the pieces so you know where they come from! Next, clean the pieces thoroughly with soap and water, making sure to get rid of all residual tobacco smoke, dirt and traces of wax. Rinse well and allow to dry thoroughly... maybe a day or two. Then, if necessary, use Heinol's plastic repair tape ($2 gets you 30 square inches) wherever necessary for cracks and unstressed breaks.

Choose a color for your new interior design, remembering that it's easy to go darker, but tough to go lighter. At the hardware store, buy a can of Rust-Oleum (a half pint is plenty) and lots of cheap sponge brushes in one and two inch widths. Don't attempt to use spray paint; it takes a lot of experience to spray well and you will forever be annoyed at the inevitable runs (particularly if you were holding the piccc upside-down so that, when installed, the run runs uphill.)

The secret is to brush tlie paint on in very slight thin coats: it might even bc a good idea to thin the paint a little before application. In so doing, the fine "grain" in the plastic is preserved and shiny spots do not form. Allow tlie paint to dry at least two days between coats. Hanging the pieces from the basement rafters on bent coat hangers assures no drying marks, and three thin coals docs a good-looking job. After the paint is thoroughly dry, apply Armor-All generously according to the bottle instructions. Do this two or three times, a day apart.

This process will produce like-new appearing plastic parts. You can use the same treatment on the rubberized half-round interior window welting, but it will take four or five days for a coat of paint to dry. If you are a fanatic for detail, you can also do the little plastic plugs that cover the upper plastic mounting screw holes. I used Rust-Oleum gloss finish almond (color 7770) for the window trim and overhead console and duct work, and &,, finish black (color 7777) for the instrument panel. Almond is so close lo the original Piper plastic color that you'll need to be careful not to miss some spots.

My glareshield was still in pretty good shape and a few coats of Armor-All brought hack the shine. The fabric forward of the glareshield was another matter; it was intact,

but badly faded. A couple of coats of the satin black Rust-Oleum (brushed as before), followed by lots of Armor-All made it look better than new. This can only be done with the windscreen removed, so you might want to consider replacement at this time if your windscreen is scratched or yellowed (see below). At the same time, you should paint the center windscreen post the same color as your plastic trim. The whiskey compass is held in place with pop rivets, so you can drill them out to eliminate the need to mask around the compass.

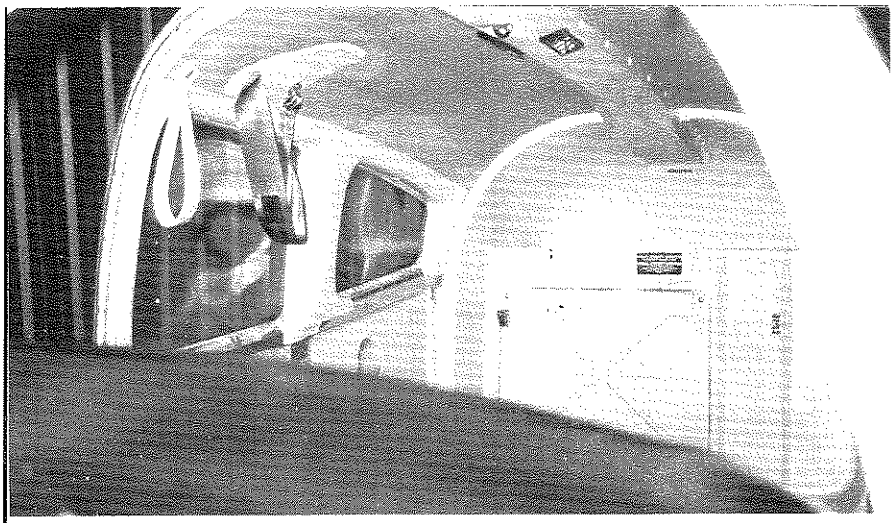

New headliner, side windows & refurbished plastic trim

A set of Rosen sun visors (800-284-7677) completes the job, if your existing visors are cracked and split as mine were. The Rosen units have the added advantage of being attached on the outboard side only, thereby eliminating the center post pivot which commonly deteriorates due to the sun. Deleting the stock sun visors unfortunately eliminates the handy reference table for power settings that is silk-screened onto the rear of the pilot's visor, so you will have to find another way to keep this vital data.

Acoustic Insulation

In June, 1995, *AOPA Pilot* magazine reviewed a product called Aero Sound Shield. This is essentially a replacement for the generally inadequate sound deadening material between your interior trim and the fuselage skin. The Aero Sound Shield material is a sandwich of high-density foam between layers of fiberglass mat, all sealed in an aluminized mylar baggie.

Pieces are pre-cut to fit snugly between the stringers and other structural members... so snugly that talcum powder is occasionally needed to squeeze a piece into place. The entire airframe is fitted with this treatment: above the headliner, behind the interior trim panels all the way to the floor, and behind the rear bulkhead (hatrack). The foam alone is used underneath the carpet. This product has a burn certification, adds about 15 pounds of total weight, and has been issued an STC.

It ain't cheap at about $1,500, but it's effective. The manufacturer claims about 6 dB of noise attenuation (more or less, depending on frequency range). That's a 50% reduction and my experience is that it provides something close to that. If you already have the factory option called "super sound proofing," expect less improvement.

Installation of the material is estimated at 20 hours, but I'd plan on twice that. It takes a lot of trimming and fitting to do a flawless job. My own installation problems were exacerbated by the fact that mine was one of the very first Cherokees to have the treatment, and the manufacturer was having some difficulty in getting all the right pieces of just the right sizes. It took a lot of phone calls and supplemental shipments to finally get it right, but each of my calls was promptly and cheerfully responded to by Linda, the very pleasant office manager. Hopefully, they've got it all sorted out now and are shipping kits that are ready-to-go. You can reach them at 310-915-9101.

Headliner

I only know of one source for pre-cut headliners, and that's Airtex (215-295-4417). Fortunately, that's all you need to know. They have gray, tan and cream in a wool fabric, and an off-white vinyl. The material is of excellent quality, cut perfectly, and is a snap to install (honest!) The headliner comes with four one-inch Velcro strips running lengthwise, and I think it very important that you replace the matching Velcro that is attached to the metal bows on the aircraft. You can buy industrial-grade Velcro at the local fabric store, but do not trust the self-adhesive. Use 3M-90 spray contact cement on both the Velcro and the bows. The last thing you need is for your new headliner to collapse because the Velcro adhesive didn't take.

Airtex also makes replacement door welting and a replacement grab handle in your choice of vinyl colors. The color they call "Sand" is mighty close to a perfect match to plastic painted with Rust-Oleum almond (see above). The door welting is really easy to install if you have the right tool, and the right tool is a small (four-inch) Phillips-head screwdriver which you will grind to a finely tapered point with your bench grinder.

Start anywhere you want, but once you locate and drive the first screw into place, the location of the remainder will be defined by the aluminum trim. Poke gently through the trim and the vinyl until your tool finds the corresponding hole in the fuselage; then insert the #4 sheet-metal screw and tighten. Deal with the cutouts for the main and upper door latches as you get to them. They require that a piece of welting be cut away; a set of diagonal cutting pliers works best because you will be cutting through steel mesh embedded in the vinyl.

Windows

My plane came with 1/8 inch side windows and 1/4 inch windscreens, but some older Pipers have 1/8 inch windscrecns. Since all of my Plexiglas was getting yellow and stretched, I chose to go with new 1/4 inch material all around. I took a hard look at the STC for a one-piece windshield (it's quite attractive), but ultimately decided against it. Remember that FAR 43 allows you to replace your own side windows. but you need an A&P to do the windscreens. Aircraft Spruce (800-824-1930), among other places, will sell you windows at 25% off list, but the factory (L-P Aeroplastics) won't talk to you unless you are in the business.

Clear plastic was my choice, but green and smoke tints are available. Tliink twice before shelling out tlie 20% surcharge for tinted glass. Sure it keeps the solar heating down on **a** sunny day, but how about night operations or low IFR when you want all the visibility you can get?

Removing the old side windows is a piece of cake. Once the interior plastic has been removed. simply remove the four retaining L-brackets by removing three small sheet-metal screws each, then push tlie window from the outsidc in. Label the brackets as you go along, because when you're done, you'll have 24 of them to sort out. I wrote a code on each with a marker pan like "RCF" (meaning right side, center window. forward bracket). The entry door is a different animal. with a continuous retainer held in place with sheet metal screws every couple of inches. Only the new pilot's side window needed trimming before installation. My local auto glass shop did the job for five bucks (but they insisted that it was at my risk, which is fair enough?)

Once the old glass is gone, you need to clean up all of the old caulk. A Stanley razor knife does a good job, and you'll be changing blades much more frequently than you'd otherwise think. Beware of tlie sharp edges of tlie aluminum window cutouts! You do not want to slide your hand along it while you clean up the caulk. I turned my knuckles into hamburger and shed more than a little blood while figuring this out. Tlie door window is a particularly difficult job, since, unlike other windows. there are multiple rivct tails that intrude into the window mounting area. If you want your windows to be flush with the skin when viewed from the outsidc. you must locate and countersink the glass underneath every rivet tail. This is a most tedious job, best done at home. Remove the lower door retainer and the hinge pins (remember which washer went where on the hinge pins) and bring the door home. This job will amuse you for a week full of evenings.

To install the new glass. first place the glass in position and have your assistant hold it in place. Using wide masking tape, mask tlie seal from the outsidc. Run a sharp X-Acto knife along tlie window cutout so that half of the tape is on the aluminum skin and the other half is on the glass.

Next, remove the window, rub the tape edges to ensure adhesion, and apply lots of a good quality siliconc sealant between the tape and the window edge. Insert the window and install the retaining brackets. The excess silicone will have oozed onto the masking tapc on the outsidc: remove the tape very carefully and the excess silicone will come with it. (Warning: some masking tape will remove the paint beneath it, particularly if the paint is old and thin. If you plan to repaint, then no problem; otherwise, watch out.) Any silicone that gets on the glass can be removed with a very clean cloth and some isopropyl alcohol. Don't use paper towels on your Plexiglass... ever!

If you arc replacing the windscreens. consider a digital OAT gauge before you have your A&P drill a holc in your nice new pilot's side windscreen. The critical temperature regime for instrument work is the one associated with ice formation. Can you tell the difference between 34" F and 32° F on the factory OAT? Neither can I.

Carpet

There are a number of suppliers of FAR approved carpcting. I purchased from Wool Carpets by *Classica* (ROO-992-9665). Call them and ask for a book of samples. Sixty square feet (12 x 5 feet) will do a Cherokee with plenty to spare, including carpeting the lower portion of the front side panels. At $16 a square yard, we are talking about $100 plus shipping. Your local automotive trim shop will cut the carpet and bind the edges for a nominal price. Look for a trim shop that specializes in street rods, because street rodders are very fussy about quality.

Ifound the article in the May 1996 POM to be pretty much on-target regarding carpeting, except that I made one continuous piece to cover the areas under the rear scats, over the scat riser, over the fuel line guard, and down to the floor (at the rear passengers' heels). Here. I used two-inch Velcro to secure tlie carpet to the aircraft frame. This docs a good job in covering the cable bundle on the right-hand sidc, just aft of tlic door.

The area in the front of the aircraft is done with lots of small carpet pieces; three under cach scat (outboard of seat rail, between seat rails, and inboard of seat rail), large pieces under the rudder pedals, each side, a piece under the flap lever console held in with snap fasteners, and left and right pieces up by the rudder trim wheel, held in with Velcro. If you measure and cut very carefully, the carpet inboard of the scat rails can be one with the flap lever piece, making for a cleaner job.

When you buy the Aero Sound Shield package you'll get enough high-density foam to cover the entire area beneath all tlie carpet, except for the baggage area and flap lever console; otherwise. you are on your own to find some kind of suitable and legal material to put beneath the carpet, assuming that you want to remove the junk material that came from the factory.

Side Panels

The original Piper side panels are vinyl over thin foam over cardboard stiffeners. They are neither particularly durable nor particularly elegant. Airtex has a much

better idea for stiffeners by using a corrugated polyvinyl material instead of cardboard, but I thought that their selection of vinyl coverings was somewhat limited. Don Stretch of Airtex agreed to sell me a set of stiffeners. without covering, for about a third of the regular price. I acquired some FAR-approved foam and some leather (see below) and had the same local automotive trim shop put it all together. The result is a custom leather interior at a very modest cost.

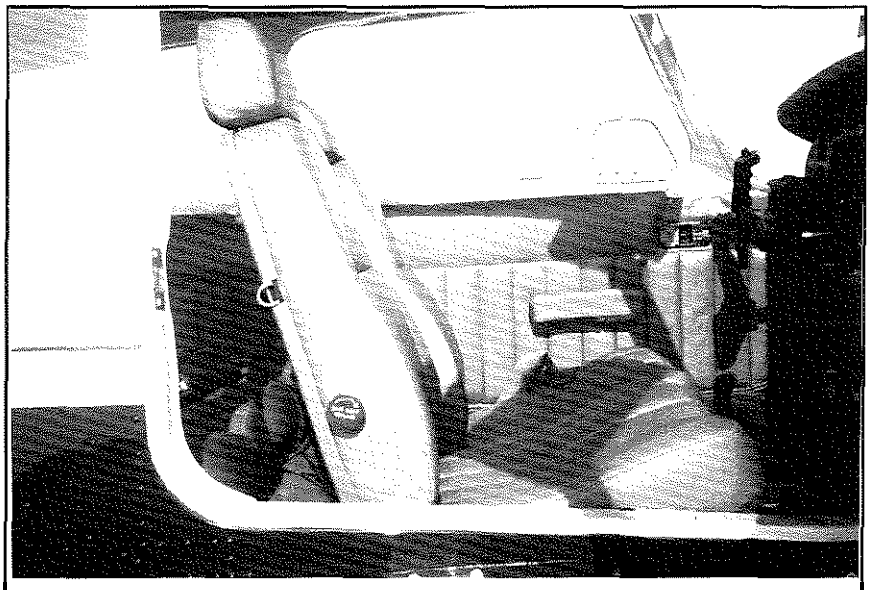

Cockpit showing ***seats - old*** *armrest* ***is leather-covered***

A word of warning. Each of thesc Cherokees is practically handcrafted. so no two are quite identical. It is absolutely necessary to custom-lit the corrugated polyvinyl stiffeners from Airtex prior to having them upholstered. Cutouts for ELT switches, air vents. fuel selectors, pitot-static drains and the like will vary Modify what you must before you upholster, not after.

For another dollar or two, get Airtex to send you an additional piccc of the corrugated polyvinyl about two-feet square. Cut this to tlic shape of the baggage door and have it upholstered, too. Makes all the difference in the world.

Leather

I gotta admit it. I'm a sucker Tor leather interiors. Sure. vinyl is more practical, and cloth is more comfortable on a very hot or very cold day. But there's something about leather that says 'Lear Jet', even if at only 125 knots. FAR-approved upholstery leather is a little pricey, but might be worth it to you. I would recoinmend Perronc Leather (800-222-6341) as an excellent source backed up by excellent advice: ask for Bill Pcrrone. An auto trim shop has access to upholster). leathers too, but thesc must be shown to meet the FAR flammability standards to be legal.

I found a local leather fabricating company with access to wholesale suppliers of upholstery leather. but again, the issue is tlie flammability standards. In tlie February 1996 issue of POM, Sterling Brooks dealt with how to obtain a burn certification so I won't repeat it here. Remember that the onus is on you. the aircraft owner, to be legal. It takes five hides to do a complete job (seats and side panels), and a typical hide is 50 to 55 square fect. At prices as high as $10 a square foot this is a high-dollar option... so use your imagination and sliop carefully and you might save yourself some money.

Seats & Seat Belts

The foam in the seats of my plane were starting to disintegrate after 18 years and the result was a less-than-comfortable ride. In addition. the bolstering (side support, lumbar support and thigh support) of a stock seat of this vintage is pretty much nonexistent.

I happened to come upon a company that is a wholesale supplier of roam products (including FAR approved materials) and this firm agreed to design a new foam for the Cherokee seat frames and make me one set.

Astonishingly. they didn't have a charge for the R&D associated with creating the first item. They took my old foam, measured the mounting dimensions. took my new bolstering requirements and put it on their CAD machine which, at the press of a button. drives a cutting tool which creates the seat foam. As you can see from the pbotograpli. the result is quite attractive (although, if I had it to do over I would ask for morc lumbar support.)

The new scat base foam turned out to bc about three-quarters of an inch thicker than the original, so all occupants sit noticeably higher in the plane. This could bc a problem if you or any of your regular passengers are much over six fect tall.

Here's the really astonishing part: this firm doesn't want to bc named in this magazine because they are not in the retail business and they're not set up to handle individual orders. Having done the original R&D for me. they don't have a way to cope with individual customers. If an established dealer would like to contact me I would be happy to put them in touch with the foam company. Maybe that way the Cherokee community can best gain access to this product.

There's no reason why your trim shop cannot cover tlie plastic seat backs (front and rear) in leather or vinyl; it makes for a much more finished look. Ifyourbacks arc badly disintegrated. tlie interior plastic suppliers mentioned carlier have rcplacemenl items. I added storage pouches on the back of the rear seats and the back of the pilot's scat to keep all of the stuff that one typically wants to store (gum. fuel sample, barf bags, charts....) The back of the right front seat was designed with D-rings and a reinforced hook to hold my oxygen bottle in place without the need for the usual

ovcr-seat harness.

You really ought to consider replacing your ratty old scat belts while you're at it. Belts do weaken and dry rot with age. Aircraft Belts (800-847-5651) is one of many places that will re-web your belts, reusing your existing hardware. This service is not cheap we're talking $200+ to do thcjob, but inadequate belts arc poor economy. What do you figure your life is worth?

Airframe and Paint

If you arc going to invest in new paint, plan on spending a lot of time in planning your design. A good way to start is to walk up and down the ramp at local fly-ins (or better yet, Oshkosh) and take snapshots of paint schemes tliat appeal. Try to figure out what the common thread is; the color, the overall design. the image (i.e., conservative vs racy) or whatever.

Get a set of paint chips from a reputable shop and lay your chosen chips side-by-side. Stare at them: in direct sunlight, in artificial light, in diffuse light. They will look different. Put your chosen interior trim colors, carpet sample, headliner sample, seatbelt sample, and leather or vinyl sample side-by-side with tlie exterior colors. What is tlic overall effect? Some things just don't work: like gray interiors with earth-tone exteriors. If you aren't artistically inclined, find a friend or relative who is. Maybe call the teacher of an interior design course at tlic community college. But think and stare for a long time. This is no time to be hasty.

Consider carefully all of the elements of the exterior design. Unfortunately, a 12-inch N number on a small plane is a major design element. Especially if you have a "fat" N number (no 1s and an M or w). FAR 45.29 leaves little room for creativity with required markings. You want tlic graphical design to complement tlie lines of tlic airplane, not fight them. The artistic friend you are going lo find can help you here. too.

If you don't like tlic N-number you've got. paint time is tlic time to change it. In what has to be the last great bargain in the federal government, you can have the number of your choice (assuming it is not already spoken for) for the grand sum of $10. Just write to tlic FAA Aircraft Registration Branch (AVN-450), PO Box 25082. Oklahoma City, OK 73125.

Tell them tlie number you want, the make, model and serial number of your plane. and tlie current N-number. They'll get back to you in a month or so. To find out who already owns what N-number, log onto the Internet at www.landings.com. There is a wealth of aviation information at tliat site, including all of the FARs and an on-line N-number search capability.

Before heading off to the painter is a good time to carefully consider all manner of external items. I replaced the passenger and baggage door locks with new ones keyed to match the ignition switch (surprisingly inexpensive at the local locksmith); if you're concerned about security, you may elect stronger or more cffcctive locks.

Do you have any no-longer-used antennas to remove? Minor bird strike damage on the leading edges to repair? Corrosion to deal with? A bent rear tie-down'? New shoulder harnesses (the mounting bolt protrudes through the roof and must be painted)? An unreliable rotating beacon'? The dollar signs are starting lo mount, but it's cheaper now than it will be later

The choice of a paint shop should be made on the basis of phone calls, site visits, and, most of all, inspection of the shop's prior work. I was hugely impressed with the products of Dial Eastern States Painting in Cadiz, Ohio (a regular classified advertiser in this magazine.) Dick and Rita Guentherdo magnificent work at rcasonableprices, and their attention to detail is nothing less than extraordinary. Rita is one of those artists that I referred to earlier, so you'll get some design help if you ask. Call them at 614-942-2316, but be prepared for at least a six-month wait for pour painting reservation. You won't be disappointed.

Now is also a good time to install any airframe modifications if you have a desire to do so. I installed the full set of Knots-2-U kits, but I found that in a tapcr-wing Cherokee tlie payoff in climb rate is far more than in speed. Not having carefully calculated a baseline before installing the kits, I hesitate to quote numbers: so I'll categorize tlie climb rate improvement as significant. and the speed improvement as modest.

Odds n' Ends

Hcrc arc a few other miscellaneous things I learned during the course of this project tliat might bc useful:

√ A complete interior refurbishment such as described is going to take you three months of weekends, plus a bunch of evenings at home. I recommend you plan on starting in late November (like I did) and plan for painting in March. You don't want to miss any nice flying weather.

√ The problem with the above is that doing detail work in a cold hangar is at least uncomfortable, and perhaps impossible. I purchased a 55,000 BTU/hour kcroscnc 'torpedo' heater lo keep warm. This turned out to be a mistake. You will need three to four times this capacity of you wish to raise the temperature of an uninsulated T-hangar appreciably.

√ Be very cautious when taking away interior space. Our Cherokees have adequate interior spacc for four people, but no margins. I found that the loss of half an inch in tlie side panels (thicker foam) and 3/4 inch in headroom (more sculptured seat contours) caused a noticeable scnsc of closeness. If you are either a tall or a large person, then this might be a bigger problem tliat you would imagine.

√ If you can afford it. painting lime is the time to get rid of as much of the plastic components of your airframe as you can. in favor offiberglass. These include wheel pants, dorsal fin, rudder cap. tail cone, wing tips, stabilator tips and perhaps some other stuff. It varies by year what's plastic and what's fiberglass; no sense spending good money

to paint disintegrating plastic parts. Globe Fiberglass (800-977-2707) makes good stuff. even if pricey. Less expensive parts are available, but I'm told (can't confirm) that they don't take paint uniformly well, so the bargain might not turn out to be one.

√ One final thought: having invested so much in bringing your aircraft up lo standards well beyond those of the factory. call your insurance agent and raise tlrc hull value on your policy If you had lo sell right now (or settle in the event of a major accident). figure that you could recover about 80% ofthc value of these upgrades (valuing your labor at zero) and raise your insurance limits accordingly.

Hangar Flying

I'm always willing to share my experiences and research with other Cherokee owners who are about to embark on such a projccl. Feel free to call 410-781-6115 if you want further detail about anything you've read here. but please do so on weekday evenings between 8 and 10 p.m. Eastern time. You can write me at 630 Buckhorn Road, Sykesvillc, MD 21784 or c-mail ken.plesser@jhapl.edu. Good luck.

Landing Gear Revisited

In the Octohcr issue a member was having problems with an intermittent gear in his Arrow. We discussed the possibility of rebuilding his landing gear motor.

This may be a viable solution in many cases, but at least one rcadcr has reminded us that the problem is often in the pressure switch located under the rear seat.

This switch is designed to cut off the motor when pressure reaches 1.800 pounds (1,400 pounds in some early models.) If the switch is not working, the gear motor will not work. Also, this switch is often the culprit when the motor keeps coming on in flight to eliminate gear "droop."

The problem often is that the older 1.400 pound switches do not maintain a high enough pressure to keep the gear from drooping. Many members have replaced the older switches with 1,800 pound switches (not necessarily legal without appropriate papenvork.)

If the switch is suspect, it can be checked for operation with a voll-ohmmeter.

Shop *Around For* Oil Cooler *Hose*

Are you currently complying with the oil cooler AD'?

One member called to report that he was quoted a price of $258 each for original equipment oil-cooler hoses. Rather than bite the bullet, he shopped around and found the Teflon type D hoses at Chief aircraft for about half price.

Not only was there a price saving. but the Teflon hoses also eliminate tlrc repetitive inspection otherwise called for by the AD.

Chief is at 541-476-1869.

Self-Destructing Alternators

Dear Terry,

I own a 1974 Archer and my problem is with the alternator. The first altcrnator lasted forever and I rcplaccd it when Mattituck did my overhaul about 330 hours ago. Wc put a new Chrysler Alternator on it and it lasted about 120 hours. It was replaced with a rebuilt that lasted for about the same time.

This Archer has no problems with belts and there is no air conditioning. I have always started according to the suggested procedures - engine off, alternator off; engine on, alternator on.

The voltage checks when the newly rebuilt alternator is test run. I don't have a clue where to start looking for the Gremlin under the cowling.

Sincerely yours.
Ray R. Brown
P O Box 8046
The Woodlands, TX

Dear Ray,

Although problems with belts arc common. problems with self-destructing alternators arc not. The biggest clue in your case is that your problems started when the original alternator was rcplaccd and the engine was overhauled at the same time.

When I have seen them in tlrc past. they arc usually traceable lo one of two problems - non-approved automotive alternators arc used or there is an oil leak in the vicinity of tlrc alternator which is trashing tlrc innards.

I would suspect that if you investigate you will find that one of these "gremlins" is the cause of your problem.

Sincerely yours,
TERRY LEE ROGERS

Had Tow Damage To steering

By R. C. Thompson

My Cherokee Six was towed back to the hangar and put away. apparently with an excessive angle left turn performed while backing it in. I did not discover the problem immediately. because all the turns to the takeoff position for flight happened to also hc to tlrc left!

The first indication of a problem occurred just aftcr lift-off, when I discovered I could not counteract P-factor and torque with enough right rudder! In the climb I had to maintain right wing low to fly a straight course.

At the time I was mystified, because in level flight the problem seemed to go away. and then return. sometimes on tlre opposite side, though usually to a lesser degree. Fortunately the rest of the night went well and we landed with the wind straight down tlre runway. Once the plane was secured, it took very little to find the problem.

It seems that tlre adjustment bolts on each side. which limit the angle the nose wheel can turn to tlre corresponding side, at the limit of their travel each strike the opposite side of a vertical pin. This pin extends upward out

of a hole in part of the frame/engine mount, and is secured at the bottom below the frame with a clevis or cotter pin so that it cannot accidently pop up and out of the hole. However, the pin is not secured in a manner that prevents rotation in the frame hole.

Obviously, IF tlrc pin remains straight, this is no problem. If the pin is seriously bent (about 70 degrees in our case), the fact that it can rotate means that the rudder excursions available at any moment can be anything or nothing, to one side or the other!!!

This could present serious problems in the air, particularly in the pattern, and even worse problems at touchdown. Also note tliat simply checking for "satisfactory" rudder travel in each direction on the ground may very well not uncover the problem at all. since the pin could have rotated to a roughly middle position.

As a partial remedy, I have dccidcd:

1) put the plane away myself, or at least personally observe the process whenever possible. and

2) while taxiing on the ground to try to determine that proper left and right travel is available. and most importantly

3) to dcterminc that neither side can turn farther than normal.

Unfortunately this is more difficult than it sounds to do with any accuracy. I am open to any ideas you have about this situation.

As a flight instructor now, I am very glad that I wasn't that very green student 1 once was, and had something like this happen to me. The end of the flight would probably have been far too exciting for my taste.

Subject: Needs A Throttle Cable

Dear Terry.

Would you know the measurement or part number for a throttle cable for my 1968 Cherokee 140. SN 28-24703?

I have a service manual however they do not list part numbers.

I would like to order one from Aircraft Spruce or somewhere like it. Any ideas you could give would be appreciated.

Sincerely yours.
Mike Pearson
Sidney. B.C. V8L 4T9

Dear Mike.

In checking With George Durham at No Toro Aircraft. he reports that the part is only available from Piper, list price is $362.70. part number 12693-04.

Any part or assembly you put on your aircraft needs to be PMA or STC's for that aircraft. You can repair your present cable. but it has to be as good as or better than the original.

Sincerely yours.
TERRY LEE ROGERS

Cure For Lack of Nose Gear Centering

By Mitch Darnell

I just received my November POM and came across the rudder centering problem letter.

I think I have experienced the same problem witli my rudder centering. It was really bugging me. I proceeded to check everything - I re-rigged the rudder cables, set the cable tension, and checked all of the stops.

What I finally found was the interconnect bolt that connects the left side of the rudder cross bar to the right side was loose. This caused one cable to become loose and the other side to tighten. Then it would reverse when pushing the opposite rudder.

Anyway. 1 replaced the bolt with a new one. I clamped a bar to each set of pedals to center the two together, then installed a new bolt and torqued it down properly, re-rigged the system to neutral all they way back to the rudder.

I have not experienced the problem since I replaced and torqued this bolt.

Battery Needs Winter Help

When it gets below about D0 deg F, my three-year old battery does not spin my PA-28's prop well. I've had many nervous moments right after yelling "clear" into the cold winter air.

I have copper cables. we've checked all the connections, and, yes, the starter is getting old. But I found that when I jump the plane from a car, the extra amperage from the auto system really spins things quicklv, i.e. the cables and starter are not in that bad of shape.

The problem seems to be that my schedule only allows so much time for flying. When I do fly, often it's only for 30 min to an hour, so not a lot of charging goes on to replenish the battery. And, of course, I fly less in the winter. when the battery really needs the replenishment.

I bought an "on-board battery charger" at Fleet Fann for 27 bucks. The instructions indicate it is for the type of battery found in autos. trucks. airplanes, etc. It is a tiny unit. maybe 4"x5"x1.5", and is made for a 12V system. It has light gauge wires that connect to the battery posts permanently. My battery is under the rear seat, and I connected to tlrc positive post and to the bolt where the negative strap attaches to the spar. I'm considering adding some banana plug connectors so I can safely remove the unit with no trouble.

The unit is velcro'd to the rise in the floor between rear seat foot areas. Do you know what the definition of a "permanent addition" to an aircraft is? If I use banana plugs and velcro, so that the charger can be pulled off at any time, would an FAA sign-off be needed?

I didn't want to put the unit under the rear seat, where the battery is, because if anything came loose it could

interfere with tlrc control cables or autopilot. I really like the floor location, because the LED lights arc readily visiblc. The unit provides 1.5 amps whenever the voltage drops one volt below the fully charged voltage (14.4 volts, I think). Upon reaching full chargc, it stops charging. The charge rate is so slow, I cannot notice any of the charging gas smell 1 usually associate with charging a battery with a six or ten amp charger But I leave the small "storm window" open anyway (inside the hangar).

I havc a drop light/extension cord that I pull down to plug in the engine pad hcatcr. For now, I am running another cord from there through the baggage door and to the charger. The charger has a green LED which shows it has power, and a red LED which indicates the battery is fully charged. The red LED stays lit even when the unit is unplugged, provided the battery is fully charged.

This unit has made a tremendous difference. My battery is always fully charged. I am considering the addition of one more item - a battery wanner. I've used this type of 'electric blanket' on big-block 4-wheel drive trucks, and it can help a lot. Even when fully charged, a cold battery will deliver only a fraction of its rated cranking amps. In this application, I'd want a warmer that is small, and of lower wattage than an automotive warmer. And. it is important to remove these warmers during the summer, as a battery needs to be able to shed excess heat.

If I was going to keep the plane longer (I'm looking to move up). I would route the 110V cord for the charger (and eventually the warmer) up through the firewall lo the spot where I plug in the engine heater. Then I could easily energize everything with a single cord, even on an outside ramp when away from my hangar.

If electricity is available, it only makes sense to keep your engine warm and your battery charged. It's easier on tlre starter and engine, and a lot easier on your nerves.

NAME WITHHELD
Upper Midwest

Worried About Carburetor AD

Dear Terry,

Do you have the low-down on tlrc carburetor AD: 93-18-03'? I have heard discouraging news on tlrc results of this conversion from a dual to a single venturi. Higher fuel consumption, rough running, etc. Is this merely because of faulty setup'? I would appreciate any information on this.

Sincerely yours.
Warren Schroeger
1318 Laclair Ave
Pittsburgli. PA 15218

Dcar Warren.

There were a few reports of problems when this AD first came out. To find out the current status. I contacted George Durham, of No Toro Aviation. His answer:

"AD 93-18-03 is very descriptive as to the carburetor models that are affected by the single-piece venturi. The AD requires at tlrc next annual inspection that the carburetor be inspected. If it has a one-piece venturi, it should have a "V" stamped on it and it requires no further action.

"If a two-piccc venturi is installed. inspection is required to determine looseness or parts missing and a one piece venturi is rcquircd before further flight. (See also Precision Airmotive Service Bulletin No MSA-2, Revision 1 dated November 1, 1991.)

"Reports of rough running and high fuel consumption probably came from well-meaning firsl class hangar flyers."

Sinccrcly yours,
TERRY LEE ROGERS

Sources for Sun Visor Clips

In the January issue we wcrc asked about getting those rubber clips for the sun visors in early Cherokees and we came up empty handed. Now, there are sources galore.

First, there is Piper. Your distributor should bc able to order them for you. They are part number 65865-000. If your local distributor cannot locate them, you might try Columbia Air Service in Groton, CT (203) 449-1257.

And Steve Wentworth, of Wentworth Aircraft. has a set of new style "black" clips which hc says are "guaranteed not to turn to goo." Wentworth has a toll-free number - 800-493-6896.

Don't forget Airparts of Lock Haven in Vero Beach, Florida (407) 770-6350 or (800) 772-3117. They have them in hard rubber, guaranteed not to melt in the sun.

And finally, there is Heinol & Associates, of Tyler, Texas, which has them at $10.95 each. Their telephone number is (903) 534-1897.

Instrument Panel; Exhaust Manifold

Dear Terry,

Is there a trick to getting tlrc instrument panel off so you can get access to the master switch? I would appreciate any thoughts you might have.

A second question concerns the exhaust manifold on tlre left side of the engine. At the point where tlre exhaust pipe connects to the muffler there are four very small exhaust leaks. They are about the size and shape of a sharpened wood pencil point.

I have a CO monitor in the cockpit and haven't noticed any effects except a slight smudging on the fuselage behind the point where tlre lower cowling and fuselage meet. I am concerned and reluctant to fly until I get a fix bccausc I do not want tlre leaks to get so bad as to crodc the pipe and make the holes larger.

Besides. any exhaust leak is cause Tor concern for a lot of reasons. 1 have tried tightening tlie clamp to no avail. Has the clamp lost its resilience over the years and a new one is needed? This clamp has a bump on it wlrich mates

with a hole in the muffler pipe and tlic exhaust pipc. Is there some sort of seal which is needed? Other than the clamp there isn't a seal or gasket. By the way, the muffler and pipe appear to be in excellent condition.

Sincerely yours.
Jack Else
Balstrop. TX

Dear Jack.

I put your questions to George Durham of No Toro Aircraft. Hc replied:

The cover around the switches just pops into a channel and it can be removed by bowing the cover strip carefully - prying one end out of the channel.

After several years this cover becomes brittle and the possibility of breakage is higher.

Tlie exhaust leaks concern me because of evidence on the fuselage. It is possible for the pipe to look good and be crodcd off inside of tlrc muffler. The muffler is slotted so that the clamp will tighten, but the clamp docs not seal. Tliis is accomplished by the close fit between tlrc muffler arid the pipe.

The bump on the clamp was a pin welded into the clamp to provide indexing and locking tlie exhaust to tlrc muffler. You may want to check wear and looseness there. Originally. tlic hole in the exhaust was drilled after the muffler was installed. Tlic fit allowed almost no movement and the pin fit tightly in the bole.

Brakeless in Salinas

Dear Terry,

I have nothing but good things to say about "our" organization to all tlic Cherokee pilots that I meet. I have, in just a few short months, completely dog-earcd my copy of Hints and Tips. However, I have been unable to find an article dealing with the problem on my 180.

Tlic craft is a 1963 180 serial number 1081. The brake calipers arc smaller than what I have seen on any other Cherokee and arc located aft of main strut casting. The brake disc is also about sixty pcrccnt the thickness of others that 1 have seen. One of the major problems that it has is spongy brakes. Wc have rebuilt the master cylinder (no toe brakes) and calipers several times and bled them in a variety of ways 'til we were ready to drop. but to no avail.

The other troubling aspect is that the top bolts, which fasten the two calipcr halves. are jammed into the strut casting and have actually worn a groove into it. I cannot remove the top bolts on either sidc without slowly removing the wheel and disc at the same time. This interferencc causes very uneven pad wear bctwccn inboard and outboard pads. Again, all the other calipers 1 have seen are larger and. maybe more importantly, mounted ahead of the main struts. I could possibly rotate the caliper down one bolt hole on tlic mounting bracket (about sixty degrees), but that would put it dangerously close to the ground if I had a flat. It also seems that I might move the calipers to the front, extend the brake hoses, swap the wheel pant brackets side to side. and cut the glass on the wheel pants to clear the calipers.

Any experience or ideas'? By the way, the equipment list shows that it should have Cleveland wheel assembly 40-28 and brake assembly 30-18.

Sincerely yours,
John A. Gianelli
Salinas, CA

Dear John,

Let's start from the bottom and work up.

The book shows tliat you have the correct wheel. brake and discs. The minimum thickness for the 164-5 disc is ,157 inches.

It appears that your torque plate has been installed incorrectly. The brake caliper should bc on the back side of tlie stub axle. The torque pins should be one over the other or 90 degrees to the ground, and the bolts should be able to be removed without the problems you are having.

The spongy brake problem may be the old hoses since we arc to believe the master cylinder and calipers have new o-rings. You may check the condition of the caliper, where tlrc anvil plate mates. Because the steel plate is harder than the aluminum caliper, the extreme pressure causcs(after a number of years) the aluminum to compress and the two surfaces are no longer parallel. This causes a rocking of the anvil and a loss of effeclivc braking; times two could give you the spongy effect you arc cxpcriencing. This surface can be made flat again by machining a slight amount off The other alternative is to replace the calipers.

Compass Won't Swing

Dear Terry,

I've been a CPA member for a few years and could really use some help with this problem. A few weeks ago we attempted to remount and re-swing the compass in our 1971 Arrow (purchased this summer). Our local radio shop concluded it was "off" due to an unshielded Narco VOR head, so wc had that unit shielded and the compass moved closer to the panel (it had been mounted high).

After the move, our little floater was off as much as 35 dcgrccs and resisted moving away from a westerly heading; no matter what direction we flew. Away from the airplane, it worked fine.

Next, all the instruments were removed to identify the interference. but when none was identified as the culprit. our shop concluded that part of the airframe had somehow become magnetized. Our radio shop and A&P have spent weeks now trying to isolate tlie magnetized area with little success. I have seen some literature on degaussing, but one involves removing a majority of tlic avionics and the other requires pulling tlie engine, both very costly projccts.

J could sincerely use any suggestion you might provide regarding alternative areas to check or othcr ways to degauss the airframe (or only part of it).

R. Michael Martin
Lake Hiawatha, NJ

Dear Mike.

As you know. most of a Cherokee is made of aluminum - it docs not magnetize. Magnetism comes from either braces and components made of steel. Or from the engine. Or from something - perhaps a magnetized screwdriver left behind the panel.

(I mention the last item because, although you would not think it would ever happen. it does so at an amazing frequency.)

Nonetheless, unless something was done when the radio was shielded, it would be very unlikely that the airframe (or engine) suddenly was magnetized. So. either something was left behind the panel that was not there before, or tlic residual magnetism was always there, but only became a problem with the relocation of the compass.

Assuming you can find no other source of magnetism, I would suggest remounting your compass in the original position. It might be possible to isolate and then degauss the offending part behind the panel, but there are no easy slrortcuts. One of the main reasons for traditional compass localions is to avoid residual magnetism which might lurk behind a panel.

Sincerely yours.
TERRY LEE ROGERS

How to Eliminate Tire Wear

Dear Terry,

On my Cherokee there is noticeable wcar on the inside of the right main tire. Tliis would normally suggest a toe out condition. I intended to make toe in adjustments but found that the wheel was actually already toe in.

I clicked the right main and found that within general limits, both gear were aligned the same measured by using the technique of placing a board touching the front of both tires and checking the angle by aligning another board along the tire the way one does on a Cessna. There is no noticeable uneven wear on the left tire and no scalloping of either one.

Again with ı-ougli measurement. both gear were vertically the same. I know of no way to adjust the vertical alignment and even if there was, it would probably be more bother than it is worth. I reversed the tire to even out tlie wear over time, but this is not really a fix. just a patch. When I reinstalled the wheel it was quite out of balance, even though I mounted the red dot adjacent to the valve stem. I had some adhesive backed weights and applied 28 grams to the rim on the light side. This was not enough to really change anything.

Do you know of any weights which could be applied to tlie rim by way of attaching by the through wheel bolts or does one simply live with out of balance tires?

Sincerely yours,
Bob Lindsay
Chillicothe, OH

Dear Bob,

If you are experiencing tire wear on the inside of a tire. it is not an out-of balance condition but an alignment problem. You could try alignment. according to tlie maintenance manual, but if you are already in specs, it would probably not help much.

Unless the wear is really cxcessivc. the solution of rotating the tires is probably the best one. (On some planes, i.e., single-engine Cessnas, high wcar rates are the norm because of tlic gear geometry. On those planes, rotation of tires on the rim is the common solution.)

Sincerely yours,
TERRY LEE ROGERS

Arrow Has Oil Leaks

Dear Terry:

For years I liave had a problem with oil leaking from the through bolts which connect the case halves together. These arc tapered bolts which mate t~ the tapers in the case halves. Mine is the older style case which has no provision for O Rings at the base of these bolts.

I was so discouraged with the oil leaks that a few hundred hours ago (maybe four hundred) I had the engine lorn down and rebuilt. My mechanic did replace one or two of these through bolts witli oversized ones. but still the oil leaks.

It's fly an hour and clean the belly an hour, a real hassle.

Several FBO's have said they could fix the problem. and many liave tried, all at my expense and all to no avail. These attempts have ranged from silicone to wrapping fine solder around the bolt to form a "gasket seal" when the cylinder is tightened down.

I am beside myself. The engine runs great arid oil consumption is low. But those darn leaks. It seems a shame lo have to put out thousands for another engine.

Can you offer any advice or suggestions? I am sure that I am not the only one with this problem.

Sincerely yours,
Charles E. Webster
Lake Havasu. AZ

Dear Charles,

You are correct in assuming that you are not alone with this problem. In fact, tlic problem is the reason for Lycoming Service Instruction 1290D which covers man) of tlic wide-flange Lycoming engine models with hod?.-fit through studs.

The instruction is divided into three sections to explain different methods of repairing an oil leak at these studs. For example. oil leaks at one of these studs can bc repaired by installing a .001 or .002 ovcrsizc stud in the original bore, reaming tlic through stud bore to accept a .005 or .010 inch oversize through stud. or by installing a Lycoming seal (P/N 72075) around the through stud at the main bearing web parting surface.

Altlrough installation of an oversize stud can usually be accomplished in an assembled engine. the bulletin points out that occasionally a .005 or .010 inch oversize stud

with a seal is required, and this condition "can only be determined when the engine is disassembled."

So. there may be hope, but only your mechanic can determine which method to use after consulting with the service bulletin.

Sincerely yours,
TERRY LEE ROGERS

How to Check Fuel Tank Hose
By David W. Traner

I've been meaning to write and give this tip for several months. so I'll start the new year off right by writing.

My mechanic showed me this:

In order to check the fuel tank vent tube you just put a piece of appropriate sized hose over the metal vent tube and blow into it. If the tube is blocked, you cannot blow. But wait - there's more.

Continue blowing. This will pressurize the fuel tank (fuel cap on. of course).

Now remove the hose from your mouth and point the hose at your cheek. If the plastic fuel tank vent tube inside tlrc wing at the back of the fuel tank is o-k, then the fuel tank indeed became pressurized and air will now blow against your cheek. If the flex tubing inside the wing is dcterioratcd, then when you blew into the hose your breath just escaped into tlrc wing and failed to pressurize the tank, Therefore, air will not blow against your cheek.

This is an easier method than either of the alternatives:

1) remove the fuel tanks and look at tlrc tubing or,

2) Fill the tanks full and then do steep turns. Then see if you smell gasoline.

The #2 method is also a bit risky.

Has 200 HP Challenger

Dcar Terry.

1 saw the question in the January issue of the Piper Owners Magazine and I thought I'd reply. I own a 1973 Cherokee Challenger (180) with the 200 lip conversion and a constant-speed propeller.

Mine was done on a onetime STC by a previous owner. The airplane flew on an experimental airworthiness certificate for a few months while the FAA approved the changes. It now has a standard airworthiness certificate.

The engine is a Lycoming IO-360-A1B6 from a Bccclicraft Sierra. The mixture. prop control and throttle are from an Arrow and work well with the Challenger panel. The cowling is highly modified. The IO-360 is wider than tlrc 0-360 and requires the cowling to be widened. The cxhaust comes through a nacelle at the right rear of the cowling and then passes through a Brackett filter in a custom enclosure associated with the lower cowling. Intake air is then routed to the front of the engine via four-inch SCAT.

I have owned N16326 since 1989 and have added several hundred hours to the tach. It's fun to fly. I get about 145 mph at 75 percent at 7,000 feet on a roughly standard day. Fuel consumption under the same conditions is about 10.5 gph. I have had the airplane at 14,500 feet. but am not impressed with the handling above 12,000.

My airplane was weighed after the conversion for a new weight and balance sheet. The weight went up some and the moment moved forward mainly because of the prop. I think it was about 32 pounds, but do not recall exactly.

Sinccrcly yours.
Karl Shidlcr
9664 Betabel Rd #21
San Juan Bautista, FA

Early Cherokee Safety Mods

By Bob Durr

When reading the many "upgrade" articles, I wonder how many Cherokee owners considered the following "safetv mods?"

1) Cylinder head temperature: a simple add on that will increase engine life and reliability. A multi-cylinder (expensive) gauge is nice, but a single-cylinder unit works well. Your #4 or #6 cylinder (back one normally runs hottest). To prove it, move the sensor and compare readings using a common power setting and altitude. (OAT and gross weight also affect readings). I find probe units (mount in cylinder) more accurate than spark plug bimetal sensors. But your CHT is only a gauge. You must look at it. Lower the nose to increase air flow and richen the mixture to maintain operating temperatures within limits.

2) Exhaust Gas Temperature: Again, an easy mod that will increase engine life and lower your fuel bills. A single cylindcr kit does nicely. Install it on number 1. Putting the CHT and EGT on the same cylinder is common practice, but a little thought may convince you that the back cylinder runs hottest and the cylinder with the longest intake manifold runs leanest.

3) Carb temperature: Another easy mod that could save your life and will reduce stress. Knowing the actual temperature and adjusting carb heat accordingly also saves fucl and increases range. If you fly much actual IFR or north of the Mason-Dixon line in winter. this is much more than a nice-lo-have toy.

4) Vertical card compass: Visible in both seals when mounted on the windshield divider and much better than a "whiskey" if you lose the vacuum pump (see below).

NOTE: Lots of Trade-a-Plane ads list the above gauges. Prices and quality vary considerably. Always consult your A&P before you buy. He may be able to get you a better price and he certainly knows which parts best fit your airplane. Labor certainly will be less if you do the installation during an annual. By ordering ahead you can have the parts on hand and paid for when tlie "big annual bill" comes in. I think all these mods are minor alterations requiring only a log entry But your A&P is the final authority. Remember. he's the one who gets to sign your log books and be

responsible.

5) Electric turn & bank or turn coordinator: vacuum pump failure and alternate vacuum source mods were discussed awhile back. Another approach is installing a 12V DC or turn coordinator. I prefer tlic turn coordinator bccause my timed turns come out better. (No vacuum means loss of heading gyro as well as attitude indicator). A vertical card compass and a 12V DC T&B work well together. If you go this route, please get a couple of hours of partial panel flight instruction.

6) Auto pilot: Piper offered the Edo-Air (Mitchell) wing leveler as an option on early Cherokees. The units often appear in Trade-a-Plane. (Piper Miscellaneous and autopilot sections). Although 25 years old they work well and most shops repair them. They make single-pilot IFR cross country much easier and also serve as a backup gyro if you lose tlic vacuum pump.

Auto pilots work better than hand flying with partial panel, but Day-VFR is tlie only condition a smart pilot flies in if he or she cannot fly the airplane on partial panel!!!

NOTE: A little shopping and a talk with your A&P could put in a vertical card compass, a 12 VDC T&B and an autopilot for tlic cost of an alternate vacuum source.

7) Pilot heat -Piper began installing the blade unit on later scrics Cherokees, so this is not a difficult mod. A good time to do it is when you have your fuel rank hoses checked (wing tanks removed). An extra switch and circuit breaker arc rcquircd. Make sure an electrical load analysis is done (real important if you have a 35 amp alternator). If you arc flying actual TFR without a heated pitot you arc an accident looking for a place to happen.

8) Strobe lights - Again, best done when checking your fuel tank hoses. Whelen makes a double flash power supply (HDA,DF); wing strobes that fit in your existing wing tips (650A); and a tail unit that goes in tlic hole your old light comes out of (A500A). Your plane will be much casicr to see day or night.

NOTE: Normally, strobes are off in tlic clouds (vertigo). So, if you add a heated pitot and strobes, you will almost never have both on at the same time, which makes a big difference for those with a 35 amp alternator.

Oil Pump Impeller

Dear Terry,

I am wondering if you can help me to narrow down whether or not I will have to comply with AD 96-09-10 on my next annual. I am trying to research whether or not my Cherokee has an aluminum impeller. I liave an 0320-E2A S/N L23691-27A in my Clierokee. On my last annual, my mechanic determined that it did not have the iron sintercd impeller, but may have the aluminum one. Is there any way to determine this without tearing into the engine?

My 0-320 is at about 2.250 since major. 4.240 TT. I am hoping get about anotlicr 100 liours out of it bcforc rebuild since it is so far in great running condition. Between tlic Lycoming SB on this. and the AD. I am somewhat confused as to whether or I can go on another 100 liours.

Thanks very much.
Steve Voelker
Gresham, OR

Dear Stcvc,

Unfortunately, there is no way to determine which gcar you have short of opening up the engine unless tlie part numbers of the gears wcrc indicated in the cnginc log books at the last gear replacement.

Sincerely yours,
TERRY LEE ROGERS

Vertical Compass Fixed Swing Glitch

By Dennis Luis

I received my copy of Pipcr Owner's Magazinc today and read tlic article on the compass problem of R. Michael Martin of Lake Hiawatlia. NJ.

I had a similar problem with the compass on my 1972 Cherokee 180. When I purchased tlie airplane the only avionics in the plane were a King 170A and a transponder, so not a lot of possibility for avionic interference, however the compass was way off.

I purchased a new compass to mount in the location on the cowl as the original was. I had the same problem. 1 could not swing the compass. It was suggested that I degauss the plane, but way too expensive. I was able lo solve the problem by installing a Vertical Card compass and having my A&P mount the compass on the metal divide between the two front windshicldS.

The metal we decided was causing tlie problem was tlic metal in tlie rudder linkage. Relocating the compass with the VC compass in the windshield moved tlic compass enough to eliminate the interfcrcncc and allow the compass to now work properly. The solution was about $275 including compass and tlic windshield mount.

The compass is available from Chief. Pacific Coast or any other mail order house.

Sincerely yours,
Dennis Luis
Woodland, CA

Notes on Arrow Gear AD

By Ed Booth Jr.

I recently complied with the drcadcd AD-97-01-01 calling for removal and inspection of the main gcar "swivel pins" on all Cherokees with retractable gear.

I was pleasantly surprised to learn that my 1968 Arrow (180) was equipped with what Piper terms the "newer style" 5/8 inch studs. According to paragraph 11 of the AD. tlie inspection is therefore not required. I had been led to believe that all of the earlier Cherokees had the smaller pins installed, and that expensive repetitive inspections would bc required. My logs do not indicate that tlie pins or brackcts were ever changed during my Arrow's 29-year history.

I bclicve the AD to bc unnecessary for tlic Clierokee linc.

and tlic FAA admits tliat tlic AD came about as the result of a gear collapse on a Seneca (PA-34-200T) in charter operalion in England. (See Advanced Notice of Proposed Rule making-Docket No. 93-CE-61-AD). It appears that my 2,500 pound Arrow has tlic identical main gear structure as the 4.750 pound Seneca.

While it is good to know I am riding on gear overbuilt for my aircraft. this is yet another example of the FAA issuing unnecessary AD's. How many cracked pins do you think they will find?- it reminds me of the infamous wing removal AD of the late 1980's.

I hope other owners find they have tlic large pins, and that they can skip the inspection.

Keep up the great job with the magazine. I still would like to know if there is an approved mod for a baggage compartment aux fuel tank-something in tlic 15-20 gallon range'? Cessna owncrs have at least three STC'd tanks of this type to clioose from. It would allow me to make it to Oshkosh nonstop!!!

Fuel Selector Problem

Dear Terry,

1 have a 1969 Cherokee Six - 260. The problem I'm having is that my mechanic can't find any information on tlic fuel sclector The problem is that when tlic selector is on any tank cxccpt tlic right tip tank. all the fuel from the right tip tank drains into the left main tank. Have you heard of this problem before?

My mechanic contacted Piper but hasn't had any lock getting a solution from them. Another mechanic told me tliat tlic fuel selector can't he repaired and has to be replaced at a cost for tlic part of $2500 and tliat Piper currently doesn't have any. Any liclp would be greatly appreciated.

Sincerely yours.
Frank Craig
Madison, AL

Dear Frank,

Most Chcrokcc fuel selector valves can bc rebuilt. The only company I know doing the work at the moment is B&S Aircraft in Wichita. KS. The charge about $500 for tlic work. You can contact them at (800) 836-2961

Sincerely yours,
TERRY LEE ROGERS

Broken Valve With Mid Time Engine

By Torello Tacchi

Late last August I left my home field to see some friends at a nearby field where I was formerly based, a distance of 18 N.M.. After exchanging the usual airplane "lies", I said adios, and flew to see my daughter at the Uriiversity of Florida, a distance from 01J of 70 nm.

After tapping the old man, daughter said adios and the old man flew home, distance 85 nm. 1 askcd the controller who was guiding me if I could fly over JAX International for a direct to 83FL. He agreed. At this time at 3.500 feet and eight miles from JAX. the engine began running rough. A quick glance at my gauges told me everything was OK except #4 cylinder was cold.

Concerned about the roughness, I advised the controller of my predicament and asked to land at JAX if I needed to since I was flying directly overhead. He agreed and askcd my fuel supply. I had 40 gallons.

I decided to not tempt fate and asked the controller for permission to land. I did not dcclarc an emergency but the controller, with good judgment, treated it as such and gave me whatever choice of runway I was comfortable with. I was based at JAX and was familiar with the protocol. He asked me how I was doing and I told him that the roughness had not changed and one cylindcr definitely was dead and that I could make the field comfortably. Hc acknowledged and switched me to the tower.

Tower asked what my fuel quantity was. By this time it occurred to me why they kept asking. I could see tlic emergency crews all lined up and ready. Three miles out 1 made my final check for landing and I did so without a hitch except when I flared and lost a second cylinder. 1 quickly added power and the engine recovered on three. I touched down and taxied and waved to tlic cmcrgency crew and they acknowledged.

I was able to taxi to Air Kaman where 1 parked my trusty ??? Arrow. Since it was Saturday, no one was there so I left a note for Vic Yates to check for a clogged fuel injector (remember, when 1 added power on flare. the second cylinder fired), and I would call him Monday morning.

On Monday 1 drove to Air Kaman to see Vic. Hc said he was tied up but if l wanted I could pull the injector and clean it and go on my way. I did and was horrified when I could see through the injector. I removed a spark plug, looked and gave a "yeiech". Something broke.

Indeed it did. One of those expensive, useless sodium cooled valves broke. A portion managed to travel to #3 and demolish it (tliat was the second cylinder to cool off but rccovcr). Fortunately for mc I was about to "help" a little and came away with nearly 10 big ones. Until this all happened the engine was operating absolutely normal in all paranictcrs.

Sort of reminded me of an English motorcycle I used to race About tlic time that I set a lap record, won the qualifying race. won the class race, and had the main cvcnt in the bag: come the main event...it blew up.

What am I to make of all this? The engine had some 1,200 hours. During my ownership annuals were performed to my specifications. (I'll never understand how anyone can advertise an annual labor of $500.) Compression varied from 72180 to 74/80. The two highest ones broke. Nothing was left to the imagination.

Performance was to specs. Oil consumption (I use 15/50), one quart per 12 hrs. Two weeks before, I flew to New York state, round trip, 15.4 hrs and used one quart. All except for six hrs were in IFR.

It was impossible to determine the cause from the wrecked cylinders but the two survivors had no indication of an imminent disaster.

What have I learned? I've now been flying for 19 years. (Time flies when you're having fun), have 1,200 hours, third airplane and this and is my second plane to have had engine problems. Both were near mid-time, plus or minus 100 hrs.

I know for a fact, from personal experience and that of many pilot friends that 2,000 TBO is at best a pipe dream. 1 plan to fly my Arrow for a long timc but I assure you if I reach 1,000 hours it will havc a most thorough examination, no baroscopc either, dismantled and inspected.

PS: The people at Air Kaman were most helpful and kind. They even watched my pocket book. I sent the prop governor to Oceanside Prop Service. The second time I've had to employ their fine service. Oceanside is in Merrit Island, Fl., and PMA Fabricators in Ft. Lauderdale.

These guys sold me two new mufflers at slightly more than the cost of rebuilding. They manufacture theirs by using a seamless "can" as opposed to a welded one as is the standard one. Tlicir service is also top notch and so ends another exciting chapter in aviation...Stay tuned for more.

Fuel Hoses Worn Out

By Gene Littge

My Arrow had some damage right at annual time due to a hangar door that blew in and damaged my rudder. After tlie annual, I had little time to fly due to professional commitments.

Onc day, the airplane gods kept sending me the message "Go check the airplane." So. I went. A complete walk around indicated nothing of a serious nature wrong, so I decided to taxi to the fuel pits. and top off the tanks and, perhaps, commit aviation. She really started rough, and didn't want to run below about 1,500 rpm. I figured she was cold and would smooth out after warmup. I taxied to the pits. and after a few more minutes shut her down.

I got out of the airplane and was shocked to find a two-foot diameter pool of 100LL under the engine compartment. To make a long story longer. the fuel hose from the fuel pump to the fuel injector manifold. although appearing in excellent condition, had completely disintegrated internally.

I did some running around here in Kansas City and finally had one made for 35 dollars. (It's the real deal with milspec numbers and everything.) There was no external indication of anything wrong, and it had just come out of a high-dollar annual. I figure they should have caught it in tlie annual.

I have no other purpose in this letter than to advise others that there probably are some seriously inadequate fuel hoses in their engine compartments. Check for rough running and fuel under the airplane. Just one little in-flight fire can ruin your whole day.

Nose Strut Leaking Air

Dear Terry,

I have a 1973 140. The nose strut leaks air & never fluid. I had the A&P reseal the unit and I assisted by cleaning the piston and making sure that there were no scars or divots.

In three days the nose was flat again. I replaced the yellow dust cap and inflated the strut again. It lasted 21 days that time. Now I need your suggestions.

Sincerely yours,
Mat 2867
From Internet

Dear Mat,

If your strut is leaking air, it is getting out through that Schraeder valve - it needs replacement. Those are high-pressure valves - they look like tire valves, but work at much higher pressures. Have your mechanic replace yours - the cost is minimal.

Sincerely yours.
TERRY LEE ROGERS

Fuel Selector Was Repaired

By A. J. Malnar

In the April issue there was an article that I can relate to. It pertains to the fucl selector valve.

The fuel selector on my 1968 Cherokee 6-300 was leaking from the left tip tank to the tank the selector was set on. I called around trying to find a solution. I was quoted a price of $3,700.00 for a replacement valve. The kits are not available to my knowledge.

I called B&S Aircraft in Wichita, KS. They wanted $725.00 to repair mine. I drained all the fuel out of all tanks. Took the fuel selector valve off. Removed the fitting coming out of the fuel selector valve. There was the problem - crud and debris had accumulated on the spring while the selector had that port open. The spring was unable to press the ball against the seat when the selector was in another position There was trash and crud in the other ports. I cleaned all ports and installed the fuel selector valve and fueled all tanks. The problem was solved with a great savings.

Windshield leak; Ashby Glareshield

Dear Terry,

In the April issue you discussed water leaks: I agree with your answer plus I had an additional leak fool me for a while. The leak was around the windshield - water then ran down the pillar in front of pilot's side window and then back along floor to rear seat.

I never did understand why it didn't leak when flying through rain yet it did while standing still.

I finally stopped the leak when I ran a bead of silicone along top edge of the windshield. I did that over five years ago with a plan to "do it right" later. The ugly silicone

is still there and still working...1 put it off long enough that 1 became a paraplegic in the meantime and now I can't reach it. So. if you do this yourself make it look right to start with.

In tlic Ashby ad on page nine, the glaresliield the lady is holding doesn't have openings for defroster vents. Do 1 have to cut them myself? Do the vents have to be removed? Does it stop before it reaches vents and if so what holds it in place and will it work with one-piece windshield modification')

On page 19: an acquaintance of mine tliat is test pilot for Raytheon was telling me about a handheld Garmin GPS that he got a Wal Mart for $69. Says hc wouldn't bc without it in plane or car. I haven't been to Wal Mart since; but if true and you don't need moving map and can't save up $699. this might be a "po man's alternative".

Sincerely yours,
Dan Caliendo
Andover. KS 67002

Dear Dan.

I put your questions to Dennis Ashby and he indicatcd that he has had other, similar questions. So, hc replied with the "complete" glareshield primer:

"We make glareshields to fit all PA-28 aircraft and all the wide-body Cherokees. such as the Six and Lance. In addition. we make a new product - a vacuum formed thermoplastic-bezel for the 140 which fits in front of the instruments (call for inorc details).

"The glareshield is made of 100 pcrccnt fiberglass that is hand-laminated to form a one-piece structure that tucks under the windshield in the front, covering the complete top of the instrument panel. It extends past the front of the instrument panel face approximately three inches and then drops vertically, at tlic widest part, about one inch to form a lip. It is on this vertical lip tliat the optional lights may be mounted to reflect light onto the instruments. There is also room for small switches or annunciator lights.

"The lights consist of incandescent bulbs (about 10, 3 inches apart) mounted inside a soft clear-plastic tube. Thcy are white and wired in parallel and shipped with approximately three feet of wire attached lo the left side. They arc FAA/PMA approved.

"The glareshield bridges the instrument pancl in the middle up to approximately 318 inch to allow the radios to vent. Since I have no idea of what kind of radios you have or will install in the future I leave tlic venting requirements to you and your radio man. If need be, vents or louvers can bc cut into tlic top of the glarcsliicld.

"Because the glareshield completely covers the top of the instrument panel. it is a good time to remove the old cloth covering and other things that are there. This does not necessitate removal of the windshield, as all these items can be removed witli it left in place. (Note: if you have an early 180 to 235 Chcrokcc with the large hump in the middle, you arc going lo have to remove the right windshield regardless.)

"The defroster louvers are installed on the glareshield permanently, so if you remove the glarcshicld they come with it.

"The vertical lip is reinforced in order to serve as a hand hold - you simply grab the glarcshicld when adjusting the seats.

"The installation time varies, depending on who is doing the job and whether or not the windshield is removed. When the windshield is out it is easier to remove everything off the panel, especially tlie old naugahyde or cloth. In the time studies I have done, the average installation time is about four hours with the windshield in place (much less if it happens to be removed.) Once the glareshield has been installed it takes less than two minutes to install or remove it.

"The glareshield comes with a naugahyde texture molded into it. If you decide to change its semigloss black color, simply spray-can it any color you desire.

"The one-piece windshields I have seen have a steel post replacing the old windshield post. As the glareshield already has the cutout of the center to accommodate the post, the answer is yes - it will work with the new one piece windshield.

"Finally there is the question of shipping. Current shipping charges are $23 east of the Mississippi and $20 west of the river. This is for ground transportation - coast-lo-coast ground takes five working days on the average."

Dennis Ashby
P O Box 1584
Upland. CA 91785
909-982-3793

Fixed Slipping Hand Brake

By Jay H. Lowden Jr.

In the May issue, Mike McCurdy discussed a problem with the hand brake not locking. I had that problem and fixed it with a small triangular file, cleaning up the detents on the plate which holds the locking mechanism. It has worked well for several years with no signs of slipping. If he wants to discuss this with me hc can call me at (804) 743-7740 or fax me at (804) 271-4427.Solved Hand Brake Lock
By Joe D'Andrea

Concerning Mike Mccurdy's problem in the may issue, my 140 had the same problem - it wouldn't lock. I removed the "push to lock" part from the brake handle and drilled out the rivets holding it together. There is a triangular piece of steel sandwiched in between the two sides. I flipped it 180 degrees so a new sharp edge was now in play.

I re-riveted the part and reinstalled it and it works fine. It may work another 30 years this way.

Hatrack Bulkhead New Source

By James Parker

Tim Averet wrote in the June issue asking for a source on hatrack bulkheads for Cherokees Call Paul at

Kinzie Industries, in Alva. Oklahoma (405-327-1565) or e-mail (kinziealva@aol.com). They are now producing in several color choices with STC. 1 was their first order - I had to finish trim to fit myself because the "rim" is manufactured oversize. It is made of ABS plastic and can be cut with a power hand sabre saw using a PVC cutting blade. The current price (June) is $350.00.

Ammeter Flutter & Arrow Gear

Several months ago a CPA member, Mike Prezbindowski, reported a puzzling ammeter flucluation - his meter would indicate normally, then suddenly flick to 31 4 scale, and then return to normal and start the cyclc all over again.

Mike checked out the alternator. the voltage regulator and the entire electrical system. Finally. the problem was found to be in the landing gear system - the power pack would cyclc to bring up the gear. stop, and then the gear would sag again, starting tlie cyclc again. The ammeter fluctuation was merely indicating the extra load as the pump cycled on and off.

So, a decision was made to use the higher pressure (1.800 psi rather than 1,400 psi) pump and pressure switch from a Seneca. And here is where the story gets even more interesting.

The switch solved the problem of the intermittent pump, but now there was a new problcm - the pump would not shut off at all.

Mike's mechanic was assured by "technical experts" that the pressure switch was not adjustable, but was set at the factory. Not content to accept this advice, he found the manufacturer of the switch and was informed that tlrc switch was, indeed. adjustable - a washer on the plunger can be moved thereby adjusting the limit of the switch.

Using a pressure gauge, he determined that the switch, as received, was set to turn off at a pressure of 2.000 psi - a pressure too high for the 1,800 psi pump assembly to reach. Ergo. the pump was permanently on.

Adjusting the switch solved tlie problem. Now. the pump turns off at 1.800 psi and the gear is kept locked in tlie up position as Mr. Piper (and Mr. Weick) intended.

Cherokee Autopilots

By Terry Lee Rogers

There arc a lot of Clierokees in which the autopilot has long ago gone belly up. And there are a lot of owners who have no idea as to what can be done to revive their automated friends.

Unfortunately, there are a lot of shops which can instal! new avionics. including autopilots. but few technicians who can give any advice about older units.

Sometimes it pays to refurbish an older autopilot while at other times a pilot is money ahead simply to trash the current unit and install a brand new one. But liow can a pilot get good information to make his decision?

Going back to the original manufacturer of the equipment may do little or no good - they make new equipment and are not interested in resurrecting "dinosaurs" from the 60's. They can refer you to some field repair shops whiclr may be able to help. but then you are on your own.

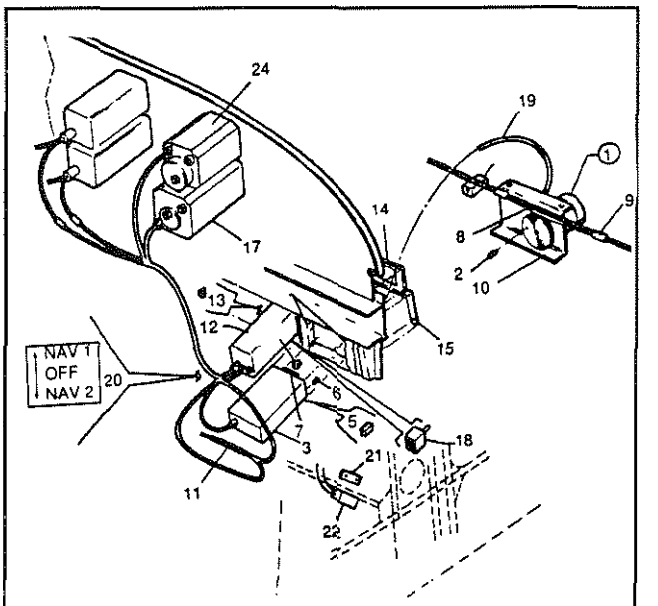

Autocontrol III Installation Drawing Showing System Components

Then one day I read a report of a Piper owner who found a source which was actually anxious to help out with problems on his vintage autopilot. Tliat company was Autopilots Central in Tulsa, Oklahoma.

Calling the company got me in touch with Bob Ferguson, possibly one of the best informed individuals about autopilots in tlie country. First of all, a word about Autopilots Central. Tliis is not a hole in the wall operation. They operate a large maintenance hangar and are a 24-hour a day operation. You do not have to schedule around one person"s fishing excursions.

Bob explained that tlie company had a good supply of tlie electronic components found in those old Century (Mitchell) systems used in the older Pipers. along with wiring diagrams and. very importantly, many of the harnesses needed to bench check those old systems. Calling ahead. Bob will schedule you into the maintenance hangar and make a hotel reservation for you at the convenient airport hotel.

What is an autopilot?

Early autopilots were called "gyro pilots" and this gives us a clue to the workings of all autopilots. Virtually all autopilots use some form of gyro as a primary reference for some of its functions. In its simplest form. the autopilot is a wing leveler. A gyro is mounted in the aircraft with its spin axis oriented so it will sense any deviation from level flight. The gyro incorporates some form of pickoff (electric or pneumatic) that is connected to a servo device that has control of the ailerons of the plane. When the gyro senses the wings are not level. the pickoff tells the servo to move the ailerons,

which move the aircraft back to wings level and climinatcs the signal from tlic gyro pickoff which, now, tells tlic servos to stop moving the ailerons. Now. that took a lot longer to explain than it does to happen.

The average autopilot senses and makes 25 corrections in tlrc same time a human pilot can make about eight. The autopilot will also sense displacements (deviations from the reference) and trends and make corrections that a human pilot will never be aware of. The autopilot's sensing devices are calibrated a bit finer than even tlre best human pilot. They are capable of sensing and correcting deviations smaller than one tenth (1/10) of a degree and doing it in milliseconds, so keeping tlic wings level is an easy chore for the autopilot.

Autopilots can also have pickoffs and servos that arc oriented for the pitch and yaw axes of tlie aircraft and provide full three-axis stabilization for us. The magic begins when we ask the system to do something besides hold us in a stabilized attitude. By introducing external signals into the path of the sensors and servos we can command the system to change the aircraft's attitude, altitude and direction and wc can control it through all normal flight maneuvers.

If. for example, we want tlrc aircraft in a twenty dcgrcc bank to the left, wc send a signal to tlre servo saying wc arc in a twenty degree bank to the right. This causes an immediate "correction" from tlrc scrvo, resulting in a turn lo the left until the signal from tlrc gyro is equal, but opposite to the command signal we sent from outside. The servo stops. leaving the aircraft in a twenty dcgrcc left hank and it will stay there as long as we leave tlic command in the system. When we remove the command, tlrc servo immediately "sees" the signal from tlrc gyro that is displaced twenty degrccs to the left and acts to bring the wings back to level. We have just make our first "command turn."

From this simple beginning wc can expand our external inputs to include heading control from directional gyros, altitude control from barometric chambers, and navigation tracking from VOR receivers, loran and GPS, and even localizer and glideslope receivers to permit tlic autopilot to bring the aircraft to tlrc missed approach point. untouched by human hands.

What are Components?

So what components make up an autopilot7 They are multi-box systems and their parts are scattered throughout the airplane in most cases. Simpler systems have gyros (attitude, directional and turn rate) mounted in the instrument panel where they do douhlc duty. providing primary instrument references for the pilot and incorporating the pickoffs for tlre autopilot. They usually have some form of control panel or "head that includes tlic switches for engaging the system and selecting its various niodes (often called the mode selector) and making command inputs to the system. This is always locatcd within easy reach of the pilot on the panel or pedestal in the cockpit.

A computer or central processing unit of some kind is rcquircd to receive, process and send the signals to the correct places at the correct times. These are often remote-mounted boxes in the nose or tail avionics bays, but the modern trend is toward miniaturization and compacting and digital electronics have permitted autopilot dcsigncrs to incorporate the computers into the panel-mounted controller.

The servos are commonly located near the controls they affect. such as aileron servos mounted in tlre wings. There are exceptions, of course, hut if tlrey are not located near tlie controls. then they will bc locatcd where tlrcy have access to thecontrol cables so they can be mechanically connected into tlic aircraft. The servos always incorporate slip clutches or breakaway devices (links or shear pins) that permit the pilot to override a malfunctioning servo and regain manual control of the aircraft.

Other separate pieces of the autopilot may be altitude sensors and radio coupling devices, although again. tlre trend is to incorporate these items into the basic computer.

Autopilots arc classed as electromechanical devices and this gives us a little insight into what tlrey might need in terms of maintenance. The gyros and servos have the moving parts and the most maintenance. The servos are doing all the work and generally need repair or overhaul long before tlre electronics fail. The electronics begin to have problems as age takes its toll on some components, such as electrolytic capacitors and transformers.

Sonic of the systems that use the split-pin blue hex connectors need connector replacement to eliminate intermittent malfunctions. It seems tlre split pins lose their grip on things and create open circuits in vital areas, such as gyro signals and scrvo drive lines.

Whatever the malfunction it is important to deal with it in a timely manner. In addition to the pilot relief that it provides, in a real emergency tlre autopilot's ability to fly and navigate tlie plane could make the difference between life and death.

So, get it fixed if it's broken and turn your **autopilot** on!

Some Considerations

If you have an older Piper autopilot. here are a few things you might want to bc aware of:

Q: What are the differences bctwccn the various Autopilot models?

A: All Autocontrol I and II units are RF (radio frequency) and arc very old and soon will bc non-repairable. We are simply running out of parts. The same for Altimatic I and II systems. Autoflite systems all consist of either tlre gyro-stabilizer wing leveler or the Century I wing leveler. Both are available with nav trackers and currently repair parts are available for both.

Q: How can an owner detcrminc whether it is feasible and practical to repair an older unit'!

A: Call Autopilots Central and discuss it with mc.

Each situation is different. General rule: it if has a AN-style (old, large) gyros, start saving for a new system.

Q: What are the comparative costs of repairing a unit versus replacing it with a new one?

A: You can almost always repair for less money than replacing, but replacing comes with new gyros (and everything else), a factory warranty, upgraded capabilities and an intangible amount of peace of mind. General rule: if you have a modern system, fix it, an older system, replace it.

Q: What is the procedure for scheduling for service?

A: Our facility is affiliated with Sparks Aviation Service, a 24-hour full-service Texaco FBO. Aircraft can be dropped and recovered at any time. Scheduling is by phone, Monday through Friday, 8 a.m. through 5 p.m. Central time (918-836-6418). We usually run two to three weeks in advance, sometimes more in the summer. Call and plan ahead.

Q: What about maintenance of autopilots.

A: Don"t continue to fly one after it starts to malfunction. Bring it in for service. There is no real way to extend their service life. Just use them regularly and fix them when they break.

Q: What is the difference between RF and auto control systems?

A: All autopilots use some form of signal energy to determine whether wings are not level or heading is not aligned or the altitude is off. Early Piper systems (pre-1967) used radio frequency energy for this purpose, while all modern systems use audio frequency which runs on wires instead of coaxial cables. Owners of RF systems are all doomed to eventual replacement.

Q: What is turnaround time and cost of either repair or replacement?

A: Usually, it takes one to five days for repairs, two to ten days for replacement (depending on what you buy). Labor costs are about 30 percent of replacement cost. It is impossible to generalize, however: call for a quote.

Autopilots Central
3112 N. 74th East Ave.
Tulsa, OK 74115
(918) 836-6418

New Wing Spar Service Bulletin

Cherokee owners received a surprise in the mail in the waning days of summer - a new service bulletin from Piper which addresses two long-standing problems.

Service bulletin 1006 caused a few additional problems when it was issued. First, the rumor spread rapidly that a new "AD" had been issued. No, although the FAA has discussed issuing an AD, it has not done so at press time, leaving Piper owners to comply with the service bulletin instead. And although Piper describes the 8-page bulletin as "mandatory", most Cherokee owners know that they have the discretion of making the decision as to whether to comply. Nonetheless owners should think long and hard before deciding not to comply with this bulletin.

A second problem concerned the availability of a rust-proofing agent specified in the bulletin, Dinotrol AV-8. Some owners received word that although Piper had the material in stock, it could not be shipped because it was a hazardous material. Not so. The truth is that the distributors cannot ship the material - they merely take the orders and it is then drop-shipped directly from Piper which has received the required approval to ship the "goop."

So, with these preliminaries out of the way, let's take a look at the bulletin.

The bulletin covers just about the entire Cherokee fleet of PA-28 and PA-32 aircraft - the factory estimates that about 66,000 planes may be affected. It calls for removal of the fuel tanks and inspecting the main spar for corrosion every seven years. The tank removal and spar inspection is to be done at the same time as the normal annual inspection.

In addition, while the tanks are removed, the bulletin recommends replacing fuel tank vent hoses.

Normally, the factory recommends replacing these hoses every eight years or 2,000 hours, but it does make more sense to replace them while the tanks are out for inspection.

If corrosion is found on the spar other than minor surface corrosion, the bulletin calls for repair according to FAA guidelines or replacement of the part. And while the spar is being checked, the bulletin recommends that it also be checked for such obvious defects as cracks.

Finally, before reassembly, the spar should be treated with the Dinotrol AV-8. One container is required to treat PA-28 models, while PA-32 models call for two containers.

The bulletin calls for repeating the operation every seven years. Service bulletins are voluntary for most operators, although they are mandatory for aircraft used in commercial operations or for aircraft operated in most countries outside the United States.

Old Wiring, Bad Connection

By Bob Fox

I just was going over my 1968 Arrow prior to an extensive trip my wife and I plan to take. It was routine inspection stuff and for some reason I turned on the navigation lights. I found the tail light inoperative.

I don't know how long it has been this way. I usually don't preflight with these lights on and probably defer to my strobes. (I know the strobes work because in the cockpit I can see the wings and the tail and I can hear the belly.)

Anyway, inspection showed the bulb o-k. I took off the fixture and checked ground. OK. I checked voltage and it read six volts or so. I took the rudder fin off and took apart the positive lead. It has "hand shakers" as connectors with some clear spaghetti along the connection held in place with a tie wrap at each end. I asked around and found that this was probably the way it was built. The hand shakers are copper and they were totally covered with dark oxidation. I could not get the probes of my meter to read any voltage

unless I really pierced tlrc surface with the point of my probe.

I cleaned tlrc shakers. rcinstallcd them, and an ops check came out o-k.

As I recall the history of my bird. I paintcd it in 1990. I took off the controls and tips, etc., and had them done separately. I don't think we undid the tail bulb connection other than the screw connector at the back of the fixture. This was probably just taped out of the way as the vertical fin was primed and paintcd. I think I may have just undone this connection for the first time since it was built. I am pretty sure it has not been undone in the last 17 years since I have had it.

This is a long letter Tor a very little problem, but I thought you might find this informative.

Cherokee Fuel Tanks

By Terry Lee Rogers

All most Cherokee owners know about their fuel tanks is that they are located generally somewhere in tlrc vicinity of the fuel filler caps. This is unfortunate, in that those fuel tanks can become mighty expensive i t tlicy are not properly cared Tor.

Luckily, there is a guru of gas tanks for us Cherokcc drivers - his name is Al Snyder and he owns Skycraft Corporation of North Hampton, New Hampshire. And Tor 24 ycars he has been resealing Cherokee fuel tanks.

Currently, Al continues to reseal tanks for the Hersliev-Bar and the 25 gallon taper wing models and he also manufactures a kit which provides wing mounted landing and taxi lights (more on this kit later).

After 24 years Al probably knows the Chcrokec fuel tanks better than anyone (including Piper). And, as it turns oul. there is a lot to know I spent some time with him to find out for myself what there is to know about Cherokee fuel tanks.

The first thing you need to know is that Piper changed the method of sealing its tanks in 1967 - they went from a fuel-resistant seal to a fuel-proof seal. That was a big change for the better. The former sealant required a coating (known as sloshing) to protect the sealer from the fuel. With the fuel-proof sealer they never sloshed any tanks again.

The pre-67 tanks were leakers. The seal would begin to leak and the recommended cure was to re-slosh the tanks. Unfortunately, the sloshing compound also had a tendency to break loose and clog fuel lines and strainers. And besides that... it didn't stop the leaks.

That method of sealing was used for years, but today it is verboten. The recent Piper service bulletin 1006 states: "WARNING: Use or evidence of any sloshing compound is prohibited."

About ten years ago Randolph Paints, which supplied the sloshing compound lo Piper, told its dcalcrs to mark all tlrc remaining supply "not for aircraft use." It was just too dangerous.

So. the only real cure for a leaking early-model tank is to remove it and reseal it with fuel-proof sealer and no sloshing.

Al continues to get early-model tanks because many local mechanics will just not fool with them. They rcmovc the tanks, put them in boxes (Al supplies the boxes if desired), and ship them off to Skycraft for resealing.

Some tanks, which are resealed in the field, eventually end up at Skycraft's doors when they start re-leaking. Either a mechanic simply sloshed a tank or he put too much sealant in and it ended up everywhere, or possibly tlic wrong kind of rivets were used to put the tank back together.

Let's look at the way Al rcscals the tanks.

How to Re-Seal

Tbc first thing Al does is to serialize each tank. He then inventories all the attachments (sender unit. fittings. fuel caps, quick drains, outlet fittings.) These are all recorded on an inspection record with the tank serial number and service order number.

Notation is made of the date reccivcd and any discrepancics noted. The tank is made of a skin of the wing and a three sided bulkhead which is riveted to the skin with 250 soft rivets. This creates the tank which holds the fuel. The Lance and Seneca tanks also have an internal rib for additional strength.

Then all the rivets are drilled out and the two parts separated. Both parts are then immersed in a stripper tank to soften the old sealer and sloslring plus the outside paint. The stripper is difficult to work with. It requires gloves, carbon mask and an eye shield. One of the ingredients is formic acid Ants use it to break down vegetation for food It

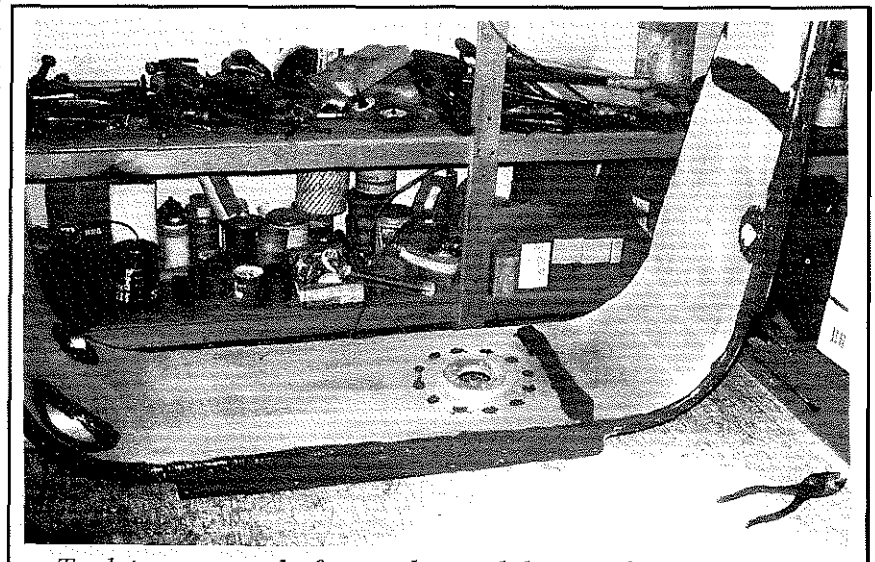

Tank is composed of wing skin and this 3-sided bulkhead

penetrates skin instantly.

Once the stripper is washed off and every bit of slosh, scaler and paint is removed, the parts are treated with a phosphoric acid etch and are washed with clean water and dried. Finally. the parts arc inspected. Generally this means tapping out leading edge dents, minor straightening of skin edges, wire brushing of surface corrosion and surface rust on steel filler necks. If badly corroded, filler necks may require removal and replacement with new parts.

Finally, after loading the skin with rivets, the tank is ready to be sealed. Once scaling is completed, all attachment parts are cleaned to Piper specifications, the vcnt tube is blown clear, new hoses installed. and fittings are wired. Sometimes the vent drain is broken. Al repairs these at no charge. The sending unit is installed with liquid scalcr and labeled. All openings are taped shut.

Al uses a sealant like Piper is currently using. It is tcnrpcrature sensitive. The optimum temperature is 80 degrees for a two-hour working period. In the summer he has to work fast - sometimes he cannot answer the phone during resealing. A film of sealant is applied to each interface and all attachments (fittings, filler neck. flange, rivnuts. etc.) The skin and bulkhead arc mated and clcco fasteners hold them together until riveted. The correct rivets must be used.

The tank is composed ofheat-treated structural aluminum (skin) and soft aluminum (bulkhead). These two structures are riveted together with AN426A4-5 rivets. The A is soft, identified with a smooth hcad. The stiffeners across tlre tank arc structural and require AN426AD-4-5 rivets. AD is identified with a dimple in tlre middle of the head.

Later Model Tanks

So if Pipcr changed the formula for the sealant in 1967. later model tanks should rcquirc no resealing, right? Well, maybe.

The later model tanks are a real improvement, but Al gets his share of them for resealing.

One place where they tend to leak is around the fuel-gauge sender. Unfortunately, the tank has to be removed to fix the leak. For some reason from 1970 to 1975 the filler necks rusted faster. To replace the neck the tank must be partly opened to remove and replace it. This means the tank has to be resealed.

Lancc and Seneca inboard tanks lravc an internal rib. A few rivets on this rib tend to leak. Sometimes, mechanics call in about the inboard tanks on Lancc models and Al offers some advice:

"Bcforc removing the tanks, remove all fuel from the tank. Drill out tlre leaking rivet. Use a flush cherry rivet covered with scaler. It may save you from having lo reseal at this time."

And then, after hanging up the phone, he says, "Am I crazy or what? Sending business away?"

Al explains. however, that he is in business to solve problems for owners and that a simple repair may last for a year or two or more - he will end up repairing tlre tank when it finally becomes necessary.

Fuel Tank Knowledge

In the meantime, he has some other information which might be of interest to Cherokee owners:

√ Fuel tanks arc valuable - they deserve care and attention. A new tank, from Piper, will cost you $1.667. And if you happen to have a Lancc tank. be prepared to spcnd $4,800 from Piper Tor a new one. New tanks come blank and oversize. They must be cut to fit the opening in the wing and a transfer template made of tape for all 70 mounting holes (8 to 12 man hours plus painting.) When sending fuel tanks to Skycraft, Al suggests insuring a normal Cherokee tank for $2,100 and a Lance tank for $5,000.

Incidentally, if you damage a tank you must buy a complete tank from Piper - the company does not have parts numbers Tor individual tank parts -just complete tanks.

√ No two fuel tanks are the same. The reason is that when Piper builds the plane, the wing is built in four subassemblies: the inboard section LE, the outboard section LE, and the aft section from butt to tip. The fuel tank is added last and is fitted after the three subassemblies are mated together on the master jig.

"Wc have seen the width vary by as much as a quarter of an inch between tanks," said Snyder.

Be prepared to spend some money getting a new tank fitted. Usually it takes about eight hours to drill all the holes and fit a tank, although some mechanics have reported it takes as long a 12 hours.

√ Used tanks should not be used. Because of the production differences between tanks, Skycraft is very carcful to identify tanks during the rebuilding process to insure that the same tank is returned to the proper owner and that orders arc not mixed up. Othenvisc. the tanks will not fit the plane when thcy arc returned.

√ Steel filler necks need to be taken care of - if not primed at least once a year, they will rust. Older style fillers were flush with the tank - rain tended to accumulate. Newer-style fillers have a raised surface of a little more than an eighth of an inch. designed to act as a water dam. Al can replace the fillers during the resealing process. He charges $150 for each filler (in stainless stccl) or $95 each to put in a new chrome filler into the old mounting flange.

√ Cherokee 235 and Cherokee 6 tip tanks deserve special attcntion. These tanks all have steel filler necks and if they get rusty they cannot be replaced - thcy are molded into the tanks. Inspect all steel fillers and put primer on them once a year. If they are pitted they are already rusted halfway through. Piper went to stainless steel fillers in the mid 70's, but earlier ones were all steel.

√ Quick drains arc made of brass - they cannot take much torque. When installing them it is important that they not be over stressed. In fact. Al says that when using the correct sealant, the sealant alone should he enough to hold them in - no wrench is necessary.

√ Stainless steel screws are the rage, and they do a good job avoiding rust and making it easier to remove tanks

and fairings the next tirnc it is necessary Howcver, many stainless steel kits contain only decorative screws - not the structural screws necessary when installing tanks. Remembcr, we said those tanks were structural - they need structural screws. Stainless steel structural screws are not real shiny -they have less chrome than regular stainless screws. They have an unthreaded portion of shank under the head (threaded up to the head means a non-structural screw.) They should also have a designation marked directly on the head,

√ Fuel gauge sending units can go bad, but somctimes can bc repaired. With tlie older units use a little phosphoric etch in the little cup on the Stewart Warner units. (That phosphoric acid etch is the stuff you buy at the home repair store to clean up aluminum before painting it.)

After the acid, swish the rotor through 10 or 12 limes, then clean out any remaining acid etch witli water. Finally. when dry, you are ready to try the unit. Use an ohmmeter and yon should read a scale of from 30 ohms (tank full position) to 240 ohms (tank empty position). The stops can bc adjusted to get these values.

√ The Lance uses four sending units with the left and right pairs connected in series. Two units, tlicn, operate one gauge, with resistances the same as with a single sender.

√ Plastic floats on sending units arc expensive (Al has them for the Stewart Warner units - they are $35 cacli.) One problem is that they consist of a plastic float on a thin piece of wire. The floats are kept in place with a small washer and a dimple on the wire. but the dimple tends to wear and may permit the float to come off. Al recommends putting the last eighth of an inch of the wire on the float end in a vise and making a much larger dimple to insure that the float does not come off the wire -ever.

√ Auto fuel, may be good generally, but it tends to cause havoc in two applications - in the fiberglass tip tanks of earlier 235 and PA-32 models. and also in the older models of Cherokees (1967 and earlier) in which fuel-resistant sealer was used and in which the tanks have never been resealed. A lot of auto fuel contains alcohol. whether advertised or not. and it can cause problems in these two tanks.

√ Fuel caps arc all vented. as is the fuel lank itself. Tlic double venting is designed to insure that the tank will vent cvcn if one vent system is clogged. Otherwise, drawing fuel would cause the fuel tank to collapse, causing some really cspcnsive damage.

Other Projects

Al is referred to by many as a dreamer - who produces some very practical results.

One such result is the Skylite, which provides new landing lights in each wing. The lights are adjustable and the kits, selling for between $395 and $595. dcpcnding on model, comc complete with everything needed, down to a special router bit which permits cutting the holes for the lights in the wing with an electric hand drill.

Routing of wiring is along the aileron and flap gap - not internally in the wing. The wires come with protective tubing, however, so they are not simply "flapping" in the wind.

And Al is working on one new project - an additional wing mounted tank for additional fuel in most Cherokces. Don"t worry - hc will be sure to announce it when he gets approval from the FAA. Currently he is in the testing stage. In fact, he recently had to provide a flutter study for the FAA.

A Cost-Effective Autopilot Repair

In the October issue we covered Cherokee autopilots. However, we did not mention one of the best cost-effective methods of repair - replacement of defective components with used parts.

The biggest supplier of used autopilot components (both Piper and S-Tec) is Wentworth Aircraft, 3015 Cedar Ave. S, Minneapolis, MN 55407 (612) 722-0065, (800) 493-6896.

Taking your plane to a shop to repair it may be the right decision in many cases, but only if you are reasonably close to the shop. Many other repairs can be made, cost effectively, right at your local airport.

But how did you know what needs to bc replaced. Steve Wentworth has sold so many units over the years that he knows the systems well. Often he can help you diagnose the problem right over the phone. Replacement of components is the most common method of autopilot repair and, for the older autopilots, new parts are simply not available. Even shops specializing in autopilot repair utilize salvage parts.

So, when making your decision on repairing or upgrading your autopilot, give Steve Wcntwortli a call. Hc may save you a lot of time and money.

Another Shoulder Harness Solution

By Ben DiDuca

Not all of my experiences with aviation have been good. Topping the "bad" list was my unespectcd investment of $8,000 in a new top end shortly after purchasing my "68 180. Ever the eternal optimist, I continued to embrace flight and aircraft ownership hoping that someday someone would do something that was both done well and affordable. It has happened.

About a year ago I began researching the shoulder harness retrofit for my Cherokee. Several companies make after market stuff, but I was getting very mixed feedback from people who had installed these products. After recovering from the sticker shock of the new Piper units (about $500 per side plus installation), I contacted Wentworth Aviation.

They had a set of used retractable belts in stock and promptly sent them to me. They were in good condition and the anchors and struts were actually cut from the fuselage of

another PA-28 in one piece. After rcceiving the parts I took them and my Cherokee to my A&P. Mark Entz at A&M Flying Service in Willows. California.

After a conversation or two between Mark and the FAA, and some additional information which was faxed promptly from Wentworth. Mark installed the shoulder harnesses. The job was done well and in an expedient fashion. This is an extensive installation requiring the removal and replacement of the headliner and Mark's work was very sanitary. Total cost, with the harness, was less than $1,000 and I have been very pleased. Everybody needs a home run once in a while.

If any of the readers are interested in maintaining the integrity of their facial structure upon hard impact they may want to give mark a call at (916) 934-4190.

Skycraft Sky-Lite

By Michael Vanderhoof

In a recent issue is a fantastic and enjoyable article on upgrading your Archer with mod kits. This article was wonderfully prepared with pictures, names and number of companies. It was an infonnative and well documented article.

There is one contribution I would like to offer all our readers. I had already begun investigating the wing light mod when I read the article. but have now finished installing one. but not the one mentioned in the article.

The one in the article requires that you purchase both new wing tips (around $2,200). That is for starters (ouch). Also, how do you think you replace a mere light bulb in those? You remove the entire wing tip, set it on top of the wing (carefully), replace the bulb and then reassemble the wingtip. As I have said to others, this is like removing the roof of my house to change a light bulb in the ceiling. This alone made my decision not to use this kit.

I found another kit from "Skycraft Corp." which also advertises in the magazine. This is the kit I installed. It is only about $400 and is placed just inboard of each wingtip in the leading edge of the wing.

The nice thing about the kit is that to change a bulb, you merely unfasten the lens, change it, and fasten the lens back. Now that is easy.

Even my mechanic said, "This is the best engineered and thought out mod kit I've ever seen."

It is easy to install and easy to understand and a lot of attention was put into it. The kit was installed by Arrow Aviation in Dallas (the authorized Piper shop.) He was impressed by such details as nylon washers under the screws to avoid breaking the paint seals. Also. I have found the lights easy to adjust myself. For the small cost this has to be the best addition to my plane, and the illumination is awesome!

Rusty Fuel Filler Necks

Dear Terry,

I have a 1963 150 with the old style (small) fuel tiller necks. The part of the neck that contacts the gas cap gasket gets rusty (surface rust. mild).

Perhaps you have seen this problem before. It would be nice to see an answer in the CPA magazine.

Sincerely yours,
Barrett Johnson
3069 Beecham St.
Napa. CA 94558

Dear Barrett,

Early Cherokee filler necks were steel and prone to corrosion. Inspect all steel fillers and put primer on them once a year. If they are pitted they are already rusted halfway through.

If they do rust through they must be replaced, which can be costly.

Sincerely yours.
TERRY LEE ROGERS

Repaired Fuel Selector Valve

By Bill Nelson

I purchased my 1965 Cherokee 180 in April of 1996. Right from the start the fuel selector was very difficult to move and when it did so it made a grinding noise.

I called the Piper folks at (561) 567-4361 and inquired about a replacement valve or an overhaul kit. They gave me a part number, 760-546V, and suggested I call the nearest Piper distributor. The distributor had the kit in stock. priced at $147, but couldn't tell me what it contained.

Shortly after I purchased the aircraft I acquired a Piper service manual through a good friend who had two. That turned out to be a stroke of good fortune. Another stroke of good fortune lines in tlle fact that one of my sons obtained his A&P ticket about the same time.

We went to the fuel valve pages in chapter 9, sections 18 through 27, and found that the fuel valve could be inspected and serviced to some extent without the replacement of any parts. We followed the instructions meticulously, which allowed using a mild valve grinding compound on the valve core while it was in the housing. We carefully reassembled the valve after a thorough cleaning and the operation was normal, with no leakage or grinding.

I hope this information is beneficial to other owners. And incidentally, I love the POM - a must for all serious Piper owners.

New STC For 160 HP Conversion

AMR&D, of Woodstock, IL, has obtained a new STC to upgrade the Cherokee 140 with the 0-320-EA to 160 horsepower.

The new STC requires only a piston and pin change and provides ten additional horsepower. According to the company, it is the only 160 hp upgrade available that still retains the original 2,700 rpm redline and 2,000 hour TBO. Propeller pitch is based on the owner's preference for cruise or climb power and is restricted only by Piper's original rpm limits.

The STC to install the 160 lip 0-320-D.A. engine in tlic 140. 150, and 151 models is also available from AM&D, Inc. AM&D offers a variety of STC's for Cherokccs including vortex generators, gap seals, stabilator tips, wing tips, and a propeller tip iriodification. The company indicates that a muffler modification with dual outlets will bc available soon.

For pricing and additional information contact AM&D, 11412 Charles Rd., Woodslock, IL 60098, (815) 318-7347, fax (815) 337-2673.

Lotsa Questions On Cherokee 6

Dear Terry,

It's coming up on annual time again on my 1965 Cherokee Six-260. A few questions concerning things I'm considering doing:

1. My scats are in rough shape, and at a minimum require new cushions and covering. I think the frames may need straightening too (there are at least three references in the logs about straightening set frames, and there is virtually no leg room between the front and middle seats). I've been wondering about fitting newer style seats with the higher backs. Will scats salvaged from a late model fit the existing rails in the front and scat sockets in the back'? If so, do modcls other than a PA-32 share tlic scats? What is required to make it legal (if it can be done)? How about the interior side panels, what year modcls will fit a '65?

2. I'm planning to take care of SB 1006 (the recent spar inspection SB) while I'm in the annual. According to the logs the tanks were last off in 1991 to take care of the SB on the flexible vent hoses. While I'm in there I'd like to put tip strobes and Skycraft lights on. Docs anyone have an STC for tip strobes on the PA32-260, or will I need to go the field approval route. I'd like to put Whelen comet flash strobes on. I currently have a belly strobe mounted in tlie rear fuselage which is unusable at night because it reflects off the stabilator onto the instrument panel and the wings.

3. I'd like to install shoulder harnesses at least in tlie front two scats. I got sticker shock from tlie Piper kit. ($522/seat) Is it possible to get the doubler plates, inertia reels, buckles and other hardware from a salvage yard? If so. would these be the same parts as those found in the Piper kit? I imagine if I went this route it would be wise to have tlic salvaged belts re-webbed. Is thcrc somewhere I can get new webbing for a PA32?

4. My fiberglass lip tanks are weeping a little on the end of tlie leading edge (just enough lo show a 3" blue stain which is usually damp). What can be done to repair this? I've heard that Piper used antimony oxide or something like that in the resin that might make it hard to repair. What causes tbc tanks to weep, can and how do you repair them and what can be done to prevent a recurrence?

5. My ELT is bcliind the rear bulkhead, so it requires removal of about three dozen screws to access it. It sure would be handy if I could cut an access panel in the bulkhead. Has anybody done this (legally)?

6. What is the deal for putting curtains on the windows. Obviously anything I put up has to meet flame retardancy. Arc there certain curtain rods which must be used or is this free to be improvised?

Ray Andraka
North Kingston, OH

Dear Ray,

For the most part later model seats will fit the seat tracks of early model planes. Tlic only problem is that Piper drilled extra holes in the tracks of the later models. It is not possible to get the seats back far enough to get out from behind the panel without reworking the tracks.

Likcwisc, the seats should fit the floor holes. But on the very early modcls, such as yours, sometimes it just doesn't work out properly. Some of these planes were, indeed, hand-fitted at the factory. Doors, seats and even ailerons sometimes do not properly interchange.

You can interchange inside panels, but it might bc cheaper and easier to match what you want to simply order new panels from Airtex Interiors at Fallsington, Pennsylvania (215) 295-4115. Tlic original Piper panels were backed with cardboard which has not held up well over the years. A salvage panel may have the same problems yours has.

Whelen manufactures wingtip strobes which will replace the position lights of your plane. Probably the A600-PG and -PR models are what you arc looking for. For more information contact Whelen at Route 145, Chester, CT 06412 or call (203) 526-9504.

You can get shoulder harnesses from a wreck, but the cost of installation, getting a field approval and re-webbing may come pretty close to the cost of the Piper units. Try Wentworth for the used assemblies (800) 493-6896 and. for re-webbing. try Aircraft Belts, Inc., at (800) 847-5651

Tip tanks are a problem on both the PA-32 series andthc 235 models. The fiberglass tanks, used on the Hershey Bar Wing planes, have a tendency not only to leak. but to delaminate the fiberglass. Unfortunately, although some have been worked (under the table), I know of no one who has a good method of repairing them. Several people, however, have warned against the use of auto gas in these models. Not only are the tanks not repairable - there is no source (other than salvage yards) of additional lanks.

The aft location of the ELT can present problems. Yes, you can cut a hole in the panel for an inspection plate. It is not a structural part of the aircraft, but cosmetically the job may not come out well and it is a lot of work for little gain. As an alternative, Don Stretch at Airtex recommends simply adding a remote test switch on the instrument panel. Many aircraft come with one from the factory and Don thinks they ALL should be so equipped.

Finally curtains are, again, decorative. Piper did sell a kit at one lime - I do not know whether it is currently available or not. But you can make your own brackets and curtains if you desire. Just make sure you use fire-retardant cloth.

Sincerely yours,
TERRY LEE ROGERS

Concerned Over Wing Skin Cracks

Dear Terry,

I am noticing a problem with Cherokccs. Recently I noticed an alarming number of them (two 140s and two 151s) with skin cracks in the wings. Most of the cracks seem to form on the left wing top skin about halfway between the main spar and tlic aft spar at either the most inboard rib or the second rib from the fuselage. One plane has a crack in the bottom right wing skin at the third rib from the fuselage.

All of these airplanes were used for flight training and have, no doiibt, had rough service. It would be a lot of work to replace the entire skin panel. Do you know of any technical data or approved data that can bc used to repair cracks like these? It seems to me that a simple patch could be fashioned and riveted in that would supply adequate strength. The problem would be in obtaining-FAA approval for such a repair without approved data.

I assume this is an emerging problem with the Cherokees and wonder if you have seen this problem before.

Thank you for your help and for your great publication.

Sincerely yours.
Charles Alesander
1419 Lakewood Dr
Slidell, LA 70458

Dear Charles,

Well, nobody said airplanes would last forever. And you arc right - skin cracks due to metal fatigue are one morc emerging problem affecting not only Cherokees, but much of the aging general aviation fleet.

Luckily, you can patch most skin cracks. Piper does not provide technical data for making such repairs - they rely on AC 43.13 and the good common scnsc of a mechanic making such repairs.

Basically, the hole needs to be stop drilled to prevent it from spreading, and then a patch needs to be applied. The size and shape of the patch and the number of rivets needed arc (generally) specified in the literature (see AC 43.13-1A&2A, para 100-c, and illustration 2.24).

TERRY LEE ROGERS

Warrior Gross Weight Increase

While looking at a 1978 Warrior, the owner said it had an STC which increased the allowable gross weight. When I asked the details of this lie said that it simply Involved the issuer providing a new POH which allowed an increased weight and nothing morc; that is, no modification lo the plane. I was somewhat skeptical of this. Arc you familiar with this and does it exist; does it have any merit etc?

Second question. I have a 1977 Cruiser with a 58 pitch prop. Is this the correct pitch and what would a 56 pitch do to climb and cruise?

Bob Lindsay
Chillicothe, OH

Dear Bob,

There is, rndeed an STC to increase the gross weight of a Warrior by 115 pounds. It is owncd by Aireast, 864 Schroeter Avc., Franklin Square, NY 11010. I did not know the details of the STC, but I was told, at the AOPA convention, that the STC, indeed, consists of a sticker which permits the increase and that no airframe changes arc required.

As to your 140, the 58 inch propeller is the standard one for your plane. It can be re-pitched. Re-pitching to 56 inches will cut your cruise speed by a couple of miles per hour, but it should incrcasc rate-of-climb by a couple of hundred feet per minute.

Sincerely yours.
TERRY LEE ROGERS

Refurbish Rocker Switches?

Dear Terry,

We joined CPA last year and enjoy your fine magazine. We have a 1972 Cherokee Six, N4528T. This is our third Cherokee, having owncd a Warrior and Arrow previously.

All three planes have had standard Piper plastic rocker switches for the master, strobes, fuel pump, pilot heat, etc. Invariably, the lettering on these wears off so that its hard to read the switch, especially at night. The new production aircraft have internally lit switches. Do you know if those are available for retrofit to older models? Is there a way to re-blacken those old switch engravings'?

Sincerely yours,
Randy Brcnnan
Vcro Beach. FL

Dear Randy.

I checked with Don Stretch, at Airtex Products. The later model switches would make an interesting addition to your panel, but unfortunately the paperwork required to get an approval From the FAA would bc cvcn more interesting (and expensive).

Your best bet would be to clean up the old switches, sand them and paint them if necessary Then, you can make up new labels with a label maker. The newest label makers can make labels which are small and attractive, unlike tlic older models which made larger labels which made the panel look like your local produce stand's price panel.

Sincerely yours,
TERRY LEE ROGERS

Two Cures For Seat Cylinders

I received the March issue today and read with interest the article on scat cylinders.

Actually. the cylinder can frequently be repaired for only a few cents worth of either brake fluid or hydraulic jack fluid, provided the seal has not dried out and disintegrated.

Remove it from the seat frame carefully, lest the

spring tension shoot the connection end piccc through the ceiling, and add fluid lo the proper chamber. You can determine the correct chamber by observing the action of the rod as it is depressed.

As tlie cylinder is depressed by the weight of the seat's occupant. tlie fluid flows from one chamber lo the other through an orifice. The attaclicd spring accumulates tension. When the actuating lever is dcprcsscd. without anyone sitting in the scat. the spring pressure forces the rod out, and the scat rises.

It is best Io pop the scat up as you climb into the cockpit and then reach down to push the lever lowering the scat into the IFR seat level your frame desires.

Wentworth gave me tlie clue on rebuilding when I inquired about a new cylinder That tip alone financed anotlicr two hundred dollar hamburger trips

Ralph J. Baron
Columbus, NJ

and this...

I had my Hydrolok seat cylinders rebuilt by the manufacturer, P. L. Porter Col, 6355 DeSoto Ave., Woodland Hills. CA 91367-2687

They rebuilt botli the cylinder and control button and put on a new stainless braid hose instead of the old plastic one. It works great, cost $107 in October, 1997. You have to send it to them and wait about a month, so it might be good to schedule the rebuild with other maintcnancc.

Warren Schoettlin
San Dicgo. CA

Yokes Need Refinishing

Dear Terry,

I have a 1968 140. Among the other improvements, the original bow-tie yokes were replaced with the newer rani's horn style. However. tlic plastic coating is slowly peeling from the yokcs. Arc you awarc of anyone who can re-coat the yokes? I am aware of the Walter Gregorie company that will supply leather covers. but I am looking to restore them

Also I recently read the starting procedure outlined in the ESSCO replacement POM. This procedure recommends starting on only one magneto. then switching to both afcr the engine is running. I don't see the logic in this and would appreciate any thoughts you might have on tlic matter.

Sincerely yours,
David N. Speranza
203 Hillside
Dallas. PA 18612

Dear David.

There have been numerous companies which have done re-coating of tlic yokcs, but most have stopped doing it. I know of only two companies at the moment. One is Allied Plastics and Coating of Houston, Texas (713) 741-9779. The other is Prisma Colorcoat, of Chico, California, which uses a powder coating method of rejuvenating the yokcs. Prisma can be reached at (800) 434-9225 or (916) 342-9225.

As to starting on one magneto, this is a good idea. Late-model planes, with key starters. do this automatically - the right magneto is shorted out so the only starting ignition is done with the magneto with the impulse coupling. This provides a hotter spark and correct timing for starting.

Older planes, with starter buttons, should be started on the left magneto (the one with the impulse coupling). Then switched to both when the engine is running.

Sincerely yours,
TERRY LEE ROGERS

Dakota Has Door Seal Problem

Dear Terry,

I have a 1969 Dakota and have had door seal problems for many years. Can you suggest a solution'?

I faithfully read the magazine from stem lo stern and I thank you mightily for the advice you gave several years ago concerning my alternator belt problem. It was truly the pulley which is the key and I have been virtually trouble-free since (rap on my wooden head!)

Sincerely yours,
Jerome B. Lammers
P O Bos 45
Madison. SD 57042

Dear Jerome,

Door seals have been a problem for a long time and continue to plague Cherokee owners. The best solution seems to be the door seal material currently used by Piper on their new planes It can be used on older models, however, botli the door scal material and the "bulb" used at tlic jam need to be replaced together - otherwise, it docs no good. Unfortunately, there is no supplier other than your local Piper distributor'

Sincerely yours.
TERRY LEE ROGERS

Notes on Replacing Oil Temp Gauge

By Guy Alexander

Here are some notes on replacing the oil temperature gauge, at least as it applies to my 1978 180.

First. determine whether the non function is the sending unit or the gauge. With the master switch on. remove the wire from the sending unit. ground the wire and note if the gaugc needle moves to the upper limit, If it does not move it is a faulty gauge. If it is the gauge you had best remove the pilot's seat now rather than later. To remove the gauge note that all gauges in that cluster come out as one unit from the front.

The front plastic is removed by working it out as a tongue and groove fit. Start at the top of one end. Remove the glass (plastic) by taking out two screws. If you have an

auto pilot tlie connector must bc removed from the back of the unit. The unit can be removed by taking out two scrcws: set this aside and remove tlic knob and screws holding the selector switch. Hang this out of the way.

Remove the oil line to the oil pressure gauge and have a rag handv for the drips. Remove the wires from all gauges, marking each wire and its post with self-sticking numbers or colored tape. Remove the screws holding the cluster container. then remove the container from tlie front. Replace the faulty gauge and reinstall by reversing these procedures. Have patience and... good luck.

Rebuilding Your Fuel Selector Valve

Courtesy Light Plane Maintenance

By regulation, aircraft fuel systems must be designed with a way to manually stop the flow of fuel lo the engine. In some aircraft this is accomplished by simply installing an on-off valve in line with the engine fuel supply, On others, manual control is provided in coniunction with a selector that allows fuel to be taken from one or both tanks independently. In most of the Cherokee scrics. this function is accomplished by using a brass body that accepts a fuel-supply line from each tank and a brass inner cone drilled to route fuel in the proper dircction. It's a simple device with a limited function and seldom is maintenance required.

There is. however, one important thing to remember about the Piper fuel valvc: both tlie inner cone valve and the sclcctor body are made of the same brass material and the sealing between tlie cone and body is accomplished simply by a precise fit. The tapered cone is held snug in tlie body by a spring. A shaft is pinned to the cone so that the sclcctor valvc handle can turn tlic valve to tlie desired position.

The problem is that two metals of the same material and hardness seldom complement each other. In fact, it is likely the two will gall and score against each other when placed in friction - especially when they are not lubricated. When in the presence of even a small amount of contaminant. tlic valve will bind as the debris grinds its way into the soft brass niaterial. It is Tor this reason that the Piper fuel valve will occasionally need servicing in order to keep it operating smoothly and without leakage.

Flooding the Cabin

Gaining access to the fuel selector valve is relatively easy. Simply remove the center screw attaching tlie handlc to the valve shaft and pry off the plastic cover plate after removing the two or three machine scrcws The selector will be located immediately below the covcr plate.

The valvc is attached to the fuselage structure with two scrcws or bolts. Thcrc will be three or four lines attached to tlic sclcctor, depending on aircraft model (a vent line is sometimes included in the selector body but most in the Cherokee series use a three-line configuration). It is important that tlie fuel lincs be loosened or removed before the valve body is removed from the structurc Failure to do so can result in twisting of the fucl line and fracturing of the line fitting end.

Since the wing-mounted fuel tanks are plumbed directlv to the fuel valve. it will bc necessarv to drain all the fucl from the tank? before removing the lines from the valve.

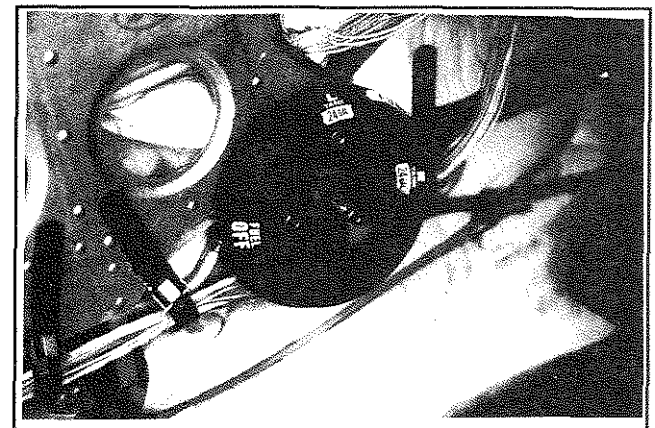

Position the selector knob to the off position before removal. There will be a half-round index on the selector shaft that allows the knob to be installed in only one position.

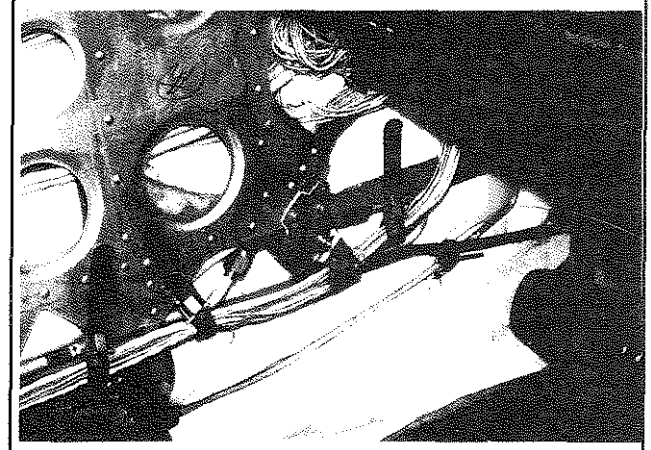

With the cover off, the valve can be seen attached to the fuselage structure. Be sure to drain all the fuel from both tanks before loosening the fuel lines.

If you're quick. you could cap the lincs after removing them from tlie valvc, but space is limited, and in order to install a cap or plug the lincs must be bent inboard slightly. There is a certain risk in doing tliis, in that the lines can kink, restricting fuel flow and possibly causing a crack at the bend. It is safer to just drain the tanks and eliminate potential flooding of the cabin or daniagc to the system.

In the event your partner decides to help you out with tliis procedure. recognize that an open fuel line with an unimpeded flow of fuel will vent about one gallon of avgas Tor every 45 seconds of elapsed time. In a matter of minutes, the cabin floor will be completely soaked and every bit of carpet adhesive will be softened in the process. If you find yourself in this predicament, reposition the aircraft in a well-ventilated area and open all windows and doors. As always, be aware of static electricity potentials and make sure your

"liclpcr" removes any steel tools from his back pockets before you commence kicking his butt down the ramp.

Valve Inspection

After removing the valvc from its mounting, clean off any old fuel stains and piper thread sealant. Pay particular attention to the threaded boss where the AN fittings arc attached. If the fittings arc screwed too tight to the body, tlie boss will leak fuel from the split. It may not be a big leak, but it can leave the cabin smelling of fuel. It should bc noted that when the fittings arc removed, any boss cracks are almost impossible to see. The fitting is equipped with a tapered pipe thread and the interference fit to the boss will open any crack in the threads.

These fittings can be left in if they aren't leaking, but if there's any doubt about leakage, hold the body in a vise and remove the fittings with a box-end wrench. Do not try to use an open-end or crescent wrench. They will merely round off the cdgcs of the fitting, causing you to revisit that low opinion you might have about your partner in the process.

Valve Removal and Repair

With the valve still in the vise, remove the gland nut located on the top of the valve body and pull it free from the valve shaft. The gland nut contains a small O-ring, P/N MS29513-011, to seal the shaft and beneath the nut is a soft copper gasket. The O-ring should be replaced with new before the valvc is reassembled.

Next, slide the spring, the spring cup and the segmented washer from the shaft. If the valve is not bound or stuck, it should pull free from the body with little effort. If it is stuck, you may need to reattach the handle and turn the cone while pulling tlie shaft out of the body. Sometimes a sharp tap with a brass hammer on tlie selector body will allow the cone to work loose.

Once removed, the cone and body can bc inspected for wear and galling. Look for scratches or deep scoring in both pieces, particularly at the lower portion of the valve conc. Liglit to modcratc scoring can bc removed with valve grinding compound. Very deep scoring might require valvc replacement. Check tlic body borc for chipping of the drilled passages for obvious damage. Generally speaking, the body will remain frec of any scrious scoring while leaving the valve cone to take the beating.

Lapping the Valve

Because the seal between the valve and the body is critical. lapping the two together is the only sure way of removing any scoring while maintaining the proper fit. While a moderately scored cone can be clcancd up with a medium-grit sandpaper first. the final stage should include lapping using a 220-230-grit lapping compound.

With the handle attached to the shaft. simply apply a liberal coating of valve grinding compound to tlic shaft and press down lightly while turning the shaft back and forth. FelPro, Inc., valve lapping compound can be found in any Grainger's catalog, 1657 Shermer Rd., Northbrook, IL 60062 (800-323-0620) and is listed at $14.05 for a one-pound can. Every five repetitions or so, rotate the valvc 90 degrees and repeat the procedure. As the valvc cone and body wear into each other, the grinding compound breaks down and some of the "gritty" feeling is lost. When this happens. remove tlie cone and apply additional compound to tlie valve. Repeat the procedure until all the scratches and scoring arc removed. The cone and valve body will have a frosted look caused by the abrasive. Check for full contact around the cone and the body to ensure there are no flat spots or depressions in the fit.

A very fine jeweler's rouge may bc used if a shiny, smooth appearance is desired for the cone and the body. It isn't necessary to maintain a good seal, but it does make for very smooth operation once reassembled.

Lubrication

There are several compounds available tliat arc specifically made to lubricate fuel system components. Unaffected by petroleum-based products, they generally remain effective for many years. While some drying docs occur when the product is removed from a fuel environment. it lasts a long lime when fully submerged in a fuel system. Fuelube is one such product and it is designed to be used with a variety of fuel system components. A one-pound can is about $17 and can be purchased from Avsco. 8656 Denton Dr., Dallas. TX 75235 (800-292-6036) or Air Parts. 1991 Airport Rd.. Wichita, KS 67277 (800-333-4221). It only takes a little Fuelube to do the job. Chances are the can will still be full by the time they shovel the last load of dirt over your grave.

After the valvc and body are completely clean and dry, apply a light coating of Fuelube to the cone and gland nut O-ring. Use the product sparingly because if too much excess lube is scraped off into one of the drilled passages, gravity feed fuel supplies could be hampered.

Reassembly

Position tlic cone and the segmented washer in tlic valve body while positioning the washer tang in its locating hole. Next, slide the spring retainer and spring over the shaft. With the O-ring in place and lightly lnbricated, place tlic copper washer and gland nut on the valvc body and tighten. Again, use a box-cnd wrench on tlie brass gland nut to avoid rounding off the corners.

It is possible lo install the valve in such a way that the fuel selector handle does not depict tlic position of tlie valvc inside the selectorbody Pay particular attenlion to the indexing of the shaft as related to handle position and fuel flow direction. Note how the left and right tanks are plumbed to the valve and blow through the fittings to ensure that fuel flow is properly directed for the position selected.

If the fittings were removed form the body, clean the threads on each fitting and lightly coat with Fuelube before installation, Do not over tighten. The fittings should be snug enough to allow for lightening of the fuel lines, but not so tight as to compromise the fitting boss.

Reinstall the selector valve and Fuel lines, leaving everything loose until all lines and fittings are properly aligned. Do not force lines or " B nuts into position on the selector valve. Cross-threading the relatively soft brass threads is a very real potential, or an adverse stress may be applied to the fuel line itself.

Leak Check

Before closing up the selector valve coverings, put some fuel in both tanks and check the valve for leaks. Let the valve sit idle for a few minutes and then work the selector through its full range of travel. Make sure any physical stops on the valve are in place and working as described by the POH and selector valve cover placards.

In order to be absolutely sure your selector valve is properly serviced, remove the fuel line from the output side of the firewall-mounted gascolator and ensure that fuel is flowing when either tank is selected. Also, be certain that the fuel supply is shut off when the selector is placed in the "Off" position. This may seem obvious, but if you're ever in a situation where the fuel supply must be shut off, it's comforting to know that it will be when the selector is in that position.

The first things you'll find about performing this minor service work to your selector valve is that the valve now turns rather easily and you will actually feel the detents again. It comes under the heading "cathartic maintenance. (Reprinted with permission of Light Plane Maintenance. To subscribe call **1-800-424-7887.)**

Wants to Install Lightweight Starter

Dear Terry.

The starter on my 1961 Cherokee 160 is going fast. Any advice on the new lightweight starters? I understand there are several manufacturers out there.

Sincerely yours.
Eric Medford
Firecrest, WA

Dear Eric.

I am aware of two sources for these starters. The first ones introduced came from SkyTec (800) 476-7896 or (817) 573--2250. These starters weigh just 7.8 pounds and use an electromagnetic engagement rather than the spinning Bendix method of engagement.

After SkyTec introduced its starters, Lycoming developed their own

I have heard nothing but good things about both models

Sincerely yours,
TERRY LEE ROGERS

Had Problem With Oil Temp Gauge

By C. Schreiber

I read with interest the article in the March issue about the plane with the intennittent oil temperature gauge.

I had a similar problem with my 1978 Archer. At times the gauge would read normal and other times it would read high, almost to red line at times. Again the engine and oil temperatures were in the normal range. After much troubleshooting (swapping of temp sensors with a friend's normal-reading system) and putting temp sensors on the oil cooler, engine and test flying all indications were in the normal operating range.

The gauge was found to be the problem. It was repaired (in this case) and oil temp readings are back in the normal operating range.

Needs glue for Storm Window Latch

Dear Terry,

Lois and I own a 1977 Warrior II based in Burlington Vermont. Over the past three years the latch that holds the pilot window closed keeps falling off .The aircraft is tied down which subjects it to the elements. However we do cover it. The way we havc attempted to repair the latch was to roughen up the surfaces of both the window and the latch anchor then apply super glue.

Unfortunately within one year the latch falls off usually just after the annual. I was wondering if anyone else has had this problem or if you might know what to use to alleviate this problem? I have been holding the window closed with FAA approved duct tape which unsettles the first-time flyer.

Sincerely yours,
Lois & Jerry Tomlinson
Vergennes, VT

Dear Lois and Jerry,

You have the right idea, but the wrong glue. Super glue, although great for quick temporary repairs, docs not hold up well over time. For a permanent repair you need a good epoxy glue. One highly recommended for plexiglass is Epoxi-Patch available from the Hysol Division of the Dexter Corporation. They will ship you a small amount by mail. Their phone number is 800-538-5712 (Ed note: It turns out another good source is Wolcott-Park. Inc.. 1700 Hudson Ave.. Rochester. NY 14617 (716) 342-3120. What you want to ask for is the Dexter Hyson Epoxy Patch Kit #EPK 608, which costs $6.59 for 2.8 oz. plus freight - call for price in your area.)

Sincerely pours,
TERRY LEE ROGERS

Ground Wire & High Oil Temp

By Rick Sizemore

I'm writing concerning the high oil temp problem

(Mar 98). I purchased a 74 Warrior last December and discovered I had a high oil temp problem. Ground tests confirmed that the high readings were false.

I noticed the high oil temp readings varied when I adjusted the instrument back panel lighting levels. The problem was corrected by tightening a loose ground wire on the instrument panel.

Re-Coating Control Yokes

By Bcrnic Hirsch

I wanted to have my control yokes refinished within a few days. so I called a local company and asked if they wcrc willing to powder coat aircraft parts. They said sure, and quoted me $135 for tlrc job (two yokes). I told them I preferred gloss black, and they said fine. They have a variety of colors available and told me if 1 choose a color they wcrc currently using on another job, they could work faster. Because they were already painting with gloss black, this worked out fine.

My A&P removed tlic yokcs by disconnecting the u-joint behind tlie panel and sliding the whole shaft and yokc out. Hc clipped any leads leading to trim control and push-to-talk making a note of their colors. ctc. I removed the trim switch and PTT buttons from the yokes, the Piper emblems and took the two yokcs along with the little metal plates for the switches to the powder coat company:

Colonvorks Powder Painting
6810 E. 32"" Street
Indianapolis, IN 46226
(attn: Kelly Strauser)
(317) 546-8850

Kelly said they first sand blast the old chipped paint off, spray on the new paint and bake the yokes to "off-gas." I asked him to plug the little screw holes from the plate so they wouldn't get filled wit11 paint.

True to his word he finished within just a few days, When I went to pick up the yokes. he said because tlie yokes were cast aluminum it took considerably more heat and time to make tlic "off-gas" work, and they ended up giving my yokes three coats of paint instead of two to make sure the job looked nice. During the process he forgot to rc-plug the screw holes, so lie offered to rc-tap tlic holes and remove the paint, which worked out fine.

When I got back to my office I began to rewire the switches. I re-soldered all the connections and used shrink tubing on the bare wires to shield them from any short circuits. It was at this time I noticed some overspray on the top of the shafts from the powder coating. I took some steel wool and after five to ten minutes had buffed out the overspray paint and removed some other minor corrosion on the shafts lo make them nice and smooth and shiny.

My A&P reinstalled the yokes and now I have what looks like a new set of yokes on my 1969 Arrow. Absolutely perfect!

Kelly said they used to do some aircraft work in the past so he has done some work on panels. Hc said they painted the panels. sent them back to be placarded, and then embossed the placards. I can only imagine how nice they turned out.

Kelly's boss said the next time they do some cast aluminum yokes they'd probably charge a little more because of the extra time needed to bake the yokes. You'll probably end up paying about $150 (just a guess). He said they guarantee the work for a year, but the coating should last many years without a mark.

Sinccrcly yours.
Bernie Hirsch
Indianapolis, IN

Installing A Quarter-Inch Windshield

By Tim Moore

After looking at eight stop-drilled cracks around the temperature probe and another eight or nine on the copilot's windshield, my partner and I decided to replace the old 118" Plexiglas windshield with a thicker 114-inch windshield. I own the Cherokee Hints & Tips and find the help and tips written in it most valuable, but there is but one short article on replacing tlic windshield - let alone replacing with a thicker than original one. I hope this article addresses many of the questions you might also have about how easy is it for two very average hangar mechanics to replace an old eighth-inch windshield with a quarter inch windshield.

We purchased our windshield from LP Aero. They were very helpful and informative when I called them to ask advice about the upcoming job. They informed me that since my 1974 PA-28-151 was built after 1973, it most likely already had a 114-inch channel that the glass would lit in.

It seems that in 1973 Piper made a soundproofing option which used the quarter-inch glass, thereby negating a need to get an STC or a fonn 337. I never heard or read that anywhere before! A simple log book entry, weight-and-balance and A&P sign-off is all that's required. LP Aero said that it should be a relatively easy job since all I had to do was remove the old glass, clean out the channel and install the new glass.

Sounded easy, too easy

Removing the old glass was very simple. We onscrewed the stripping around the glass and pulled it off. There was an RTV type caulk used that was still very elastic, this made pulling off the strips somewhat troublesome but still very easy Then we simply pulled tlie bottom of tlie glass up and it pops out. I spent 5-10 min cleaning out tlie channel and then did the same and pulled out the pilot's side glass. If all we were going lo do was to replace the old 118-inch glass with a new 118-inch glass, we would need the foam tape, that LP Aero can supply you with, which wraps around he edges to seal it. It would bc about a 2-3 hour job I estimated. Very simple.

Piper suggests using Bostich 1100 as the sealer of

clioicc lor the 114-inch windsliicld since the foam tape is too thick to use with the extra thick glass. We also used "rope caulk" which was suggested by a fellow pilot who has done several windshield replacements.

Since our Warrior had some rips in the "eye brow" wc decided to repair it while wc had the glass out. We also opted to rcplacc the black material on the glare shield. This black rubber-backed material was glued down on the glare shield which was a surprise to me since I thought it lifted out. We siinple glued a new piccc of headliner material right over the old stuff. There is a riveted metal strip that holds in the "eye brow" and the black inaterial must be fitted around this strip since it docs not come out. This was certainly the hardest part of this process! The result is very nice and ccrtainly better than before.

Installing the 114-inch glass was harder than LP Aero led us to belicvc. LP Aero suggested that we taper the edges alittle to aid in slipping it into the channel. This turned out to bc a must do or you will not get the windshield in very easily. One cornplaint of mine was the lack of instructions from LP Aero. There was a set of instructions, that came with the glass, for installation in planes that did not have a 114-inch channel and needed the STC that comes with the glass. Since they said our plane didn't need the STC, we didn't need to use those directions. The problem was it was the only set of directions we received. My phone calls lo LP Aero during the three days we worked on the project were useless since all the tech guys were at Sun 'n Fun - my luck. We realized that "dry fitting" was very important and wc put in and took out the windsliicld at least 20 times. Each time we would grind off some here and some there, we opted to measure twice and grind once. We found that the bottom cdgc needs to be tapered almost to 1/8 inch to allow the trim strips to align witli tlic old screw holes. Getting those screw holes to match witli the tliicker glass was the hardest part, Once it all fit, and we were sure of it, wc put a bead of caulk inside the channel and down the center post and slipped in the glass.

A local pilot stopped by and suggested using a rope calk at this point. Since wc had zero instructions to work witli, a pilot witli some experience in this job was helpful. We used the rope calk since he said it would more easily allow you to remove the glass if it ever became necessary. We used a lot oftliat caulk and finally had all the trim pieces installcd. Warning, make sure that tliose trim strips fit easily before you caulk it in. We had to remove a lot of plexiglass to make tliose holes line up and with caulk all around the glass it makes those holes even more difficult to align.

After getting it all tightened (don't tighten the screws until all the trim screws are in) we went around and used a clear silicone to fill in any little gaps around the windshield and around the trim pieces, don't get it on the plexiglass. It's a good idea to leave the protective covering on the plexiglass up to the very last. You will need to pull an inch or two of it back before you insert it into the channel but it will help keep the glass protected during the installation.

We removed the protective covering, wiped the new plexiglass down with Plexus (great cleaner for plexiglass) and went for a test flight. It was quieter than with the 1/8-inch glass - but not a "big" difference.

Would I do it again? Yes. For the little difference in cost between the 118-inch vs 114-inch the 114-inch makes scnsc. I would not remove a good windshield and go to the 114-inchjust to get a little more sound proofing - it'sjust not worth it.

If I can bc of any help to anyone else, please feel free to contact me at my e-mail address: Tmoore5@erols.com

Adventures in Wing Spar Inspection

By Jeff Lord

This is a case of "the more you look, the more you find."

The aircraft is a 1974 Piper Archer. I had planned in advance that - during a January annual - I would have both fuel tanks pulled and sent to Skycraft in New Hampshire, to have the tanks examined and resealed if necessary, have new stainless steel necks installed, and have any hoses or vent lines replaced as appropriate. The tanks had been pulled two years prior, for some leak repairs, and rebuilding of the sender units, and hose replacement. The tank effort this time around was in anticipation of having the aircraft repainted this coming summer, and wanting full assurance that the tanks are in good shape before, rather than find out otherwise, after painting.

To further set the stage, the aircraft has 4,800 hours total time, has never been used as a trainer, had only four owners (I have owned it for ten years) and is meticulously maintained; in fact, at a recent FAA PACE (voluntary ramp inspection) evaluation it was rated as one of the best maintained and record kept aircraft that particular inspecting FAA team had seen!

It seemed obvious, also, to perform Piper Service Bulletin 1006 since the tanks were out, and the best access was already gained. As you can see from the pictures, N56619 has maintained a very clean and corrosion free internal structure. All appropriate internal structures had been zinc chromated at the factory (24 years ago!) And that treatment has remained effective throughout the aircraft life, which has been quite diverse! N56619 has seen residence in Minnesota, Texas, New Orleans and now, Louisville, but with virtually all of those years hangared.

The white stain "splashing" that is seen in some of the close-up photos is the result of "mouse milk" treatment to remove some of the more stubborn screws during the tank removal two years ago. The other white "fogging" that is seen in some of the photos is a result of touch up paint application overspray, again, when the tanks were removed two years ago.

The close up photos clearly show a complete absence of corrosion on any areas of the spar cap, spar web, or ribs; nevertheless, we also complied with that element of the service bulletin which requires Dinotrol Av-8 to the in-

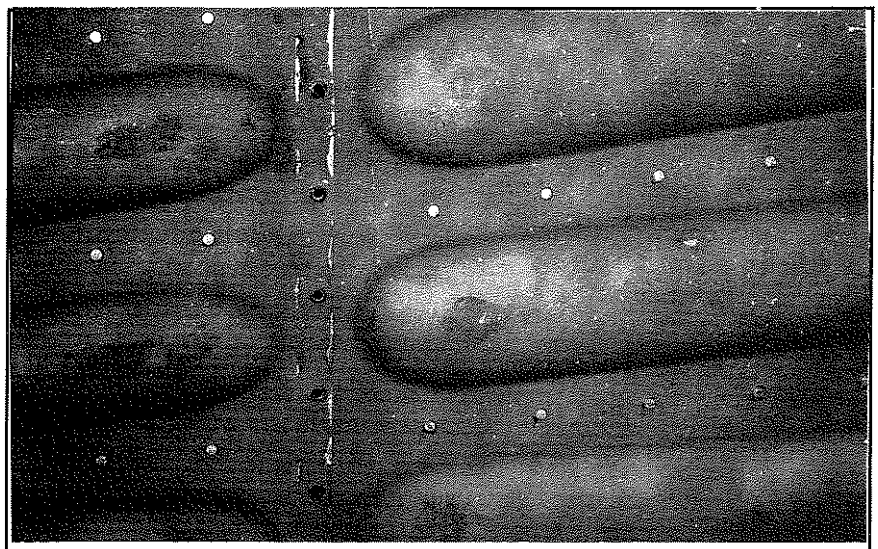

Closeup reveals cracks in wingwalk skin doubler,
Every older Cherokee aircraft has potential for this problem.

spection areas.

Now to the "more you f i n d part of the story.

While poking around witli a flashlight and mirror during the service bulletin inspection, we discovered cracks in tlie fuselage end, and outer end. of both of the two lower skin stiffeners, in the pancl below (opposite) the wing walk area. Those stiffeners arc not available as separate items, and must be either tediously removed from the lower skin. repaired and reinstalled, or, the entire lower skin pancl must be located and replaced.

We opted for the remove - repair - install option. This took approximately six hours to remove, repair and reinstall. and would have taken a great deal longer if, the next problem we discovered hadn't resulted in providing even greater access to the affected area.

Just when we thought wc had everything under control, a little more poking around witli a mirror and flashlight uncovered that more commonly seen defect of cracks in the ribbed doubler, on the underside of the wingwalk skin. As you can see from the close up photos of this arca, the cracks are not insignificant and, as born out in many already published SD's and Service Alerts, this is undoubtcdly the side effect of age, time in service and the compounded stresses endured in that wingwalk area.

This discovcry, of course. required the removal of more than 100 rivets and this upper wing skin panel. Tlic ribbed doubler - as luck would have it - is available as a scparatc piece (P/N 62062-000). and as further luck would have it. Muncie Aviation was able to come up with the very last one in stock (at that time) from Piper, in Vero Beach!

Once we had drilled out the rivets from the wingwalk skin piccc, removed and replaced tlic doubler. then re-riveted if to the skin. tlic real challenge then became reinstalling tlie wingwalk skin. Why? Because if you look closely at the close up pliotos. you will note that the rib closest to the fuselage is reversed; the rib gutter faces inward against tlie fuselage, preventing any direct access in order to be able to buck that last row of rivets! The only way to do this is to use a very long bucking bar, from underneath, carefully working it into the narrow gap (where the rubber wing root seal normally lies) between the lower wing skin and the fuselage; a long. awkward. tedious process, at best. This wingwalk repair effort took more than ten hours!

I can practically guarantee you - and the membership - that based upon my experience and that witnessed in the multiple SD's and Alerts already publislied, virtually every older Cherokee out there has this defect and that the combination of time in service witli age are the factors: in other words. just because your Cherokee may be ofthc 80's decade, rather than the 70's, docs not preclude this defect from being present. Do not ignore it. It will not go away. The cracks in the stiffeners, and the wing walk doubler can and will only get worse, and will at sonic point present a real threat to aviation safety.

Then - and if that were not enough - prior to reinstalling the refurbished tank on the port side. a look inside the wing toward the fuselage revealed a handsome mouse nest - straw, fibers, mouse droppings and all!

An hour's worth of remote control vacuuming and gathering took care of the airframe modification, witli another hour or so of thorough inspection to ensure that no in-wing lines or wires had become subject of rodent gourmet meals! One can only assume that Mickey and friends either stayed at the beach alter one of my trips to Florida or bailed out 6,000 feet somewhere en route.

Moral of **the** Story

Do not ignore Service Bulletins. Pull those tanks. Replace old flexible lines and vents. Do the spar check and corrosion treatment. And then crawl in there while those tanks arc out, and do an honest inspection of the interior wingwalk arca!

Solved His **Shimmy Problem**

By Joly Stein

Good news for some wheel shimmies. I own a 1966 235. It always had a shimmy. Three local FBO's tried all the usual solutions... with no success. I learned to live with tlic problem. Keep the weight off the nose wheel and use only the hand... wit11 great care.

A shimmy is not a minor problem. A year ago I landed on a short runway with too much speed. The resulting braking and shaking cracked the engine mount. This is a major expense.

I read the letter in the May magazine about a Piper

fix and decided to check it out. The kit is part number 764-975V. It cost $627 and required 3.5 hours to install. The kit consists of two new steering rods and a new stcering fork stop. The major difference from the original equipment is that tlie steering rods are solid - not more bungee springs and the steering radius is somewhat restricted. The net result is that the shimmy is gone. I cannot make it happen even if I try. Taxiing seems normal.

If you have the shimmy problem, check out this solution.

Repairing Those Adjustable Seats

By Bob Durr

There has been some comment about adjustable scats lately Here is what I found out when I recently worked mv seat

1. The adjustable scat is held in position by a "Hydro-lock" cylinder installed under tlie seat. (Manufacturer - P. L. Porter Co., Woodland Hills, CA. (818-884-7260.)

2. Remove tlie seat from tlie aircraft. turn it upside down and locate the "Hydro-lock" cylinder and controller. (Button you push to adjust the scat and associated win: hose.)

3. Loosen the two Allen set screws and work the control head off the front end of the cylinder

4. You should now be *able to* see a small pin protruding slightly from the end of the cylinder. Use a common screwdriver to depress the pin The cylinder should fully extend Non turn the seat over Have someone sit in the scat Push the pin again The scat should slowly lower If the scat adjusts as described, the good news is that the cylinder is OK!

The bad news is your controller is bad - see below!

5. If the cylindcr is frozen or will not hold a position, it has to be repaired. Which isn't a difficult task! First, remove the bolt at the rear of the cylinder. Now slide the cylinder out of tlie black block. Use liberal amounts of WD-40. It should not take much effort to remove the cylinder.

6. Now, disassemble the cylinder. Caution: Astrong spring is used to expand the cylinder. Firmly grasp the spring housing and compress the spring while you remove the castellated nut. The job takes three hands or two people. Remove the circlip. Hold the cylinder over a catch basin (Hydraulic Fluid.), grasp the shaft firmly and work it out of the cylinder.

7. Unless corroded, the cylinder is easily cleaned. Inspect all three "0" rings (on piston. inside bottom ofcylinder, in the cap.) Inspect for leaks (hydraulic fluid residue). Replace "0" rings as required (standard). You probably will need to make or find a special tool to replace the bottom cylinder seal. You might want to have your A&P do that one. If there is any evidence of leaking fluid... replace all seals.

8. Lubricate all seals with hydraulic fluid. Insert shaft and piston into tlie cylinder. (Careful: don't cut the "0" rings.) Leave space to add fluid. It looks like the easy way is to loosen the brass nuts, but DON'T. The inner seal is easily cut by the shaft threads. Fill the cylinder with hydraulic fluid. 1 always get too much in there at first. The cap has to slide in and be secured by the circlip. It may take two or three times to get it right the first timc you do this job.

NOTE: I assume everyone knows aircraft hydraulic fluid is red and quite different from automobile hydraulic fluid. If you decide to use auto fluid, don't bother replacing the seals. You'll just have to replace them again... soon.

Also, I would not try to reuse a corroded cylinder. If the seats fail at a critical time and the seat bottoms out....

9. Reinstall the cylinder. Repeat the adjustment tests. When the seat moves to and holds any position, you have it fixed.

The Controller

Now comes the bad news. The rubber seal is what fails and I was unable to find anyone, including P. L. Porter. who repairs controllers. The Piper part number is 76445-00. Distributors generally stock this item (it fails fairly often?) The quoted price was $528!!

That is a lot of money to be able to adjust a seat in-flight. It might be worth $528 to a club or a multi-owner setup. If only one or two fly the aircraft -you could adjust it on preflight with a common screwdriver.

Found Cure for Pulsing Ammeter

The following article was submitted anonymously through the Internet:

After spending many hours and $$$, we finally found the surprising source of the pulsing ammeter on our Cherokee 140 today. I'm posting this in the hopes that it will save someone else this much misery.

Upon purchase; our Cherokee 140 had no serious electrical problem that we could see. A few months later though, the ammeter started pulsing. The nature of the pulsing varied over time. We described the problem before annual. The mechanics declared that their meter said there was some ripple voltage, so they replaced the alternator. The intermittent problem returned, and it was a horribly expensive annual, so we decided to start wasting our own time at a constant rate instead of our money at what was starting to seem like an exponential rate. Besides. while looking back through the logs, we found that the previous owner had lived with the same problem, and had replaced the alternator, VR (voltage regulator), and OVP (overvoltage protector), and thenadjusted the VR down so that the pulsing voltage would not go so high as to trip the O W Clearly there was a long-standing problem here that multiple mechanics had been unable to fix properly.

A pulsing ammeter on this type of Cherokee can easily result from any extra resistance in the field wire. The voltage regulator (VR) draws more current through the field wire to increase the alternator output voltage, so some extra

resistance in the field wire will start to drop more voltage as the VR draws more current, fooling the VR into thinking the bus voltage is not going up as fast as it is, the voltage gets too high, the VR shuts down, etc., you get pulsing. A bad ground for the VR or OVP can also produce the symptoms. In fact, there's just a wonderful number of ways to get a pulsing ammeter on a Cherokee 140!

We followed the service manual's advice, and start jumping around each portion of the field wire circuit (e.g., eliminate the circuit breaker, then the alternator switch, then the overvoltage protector (OVP)). When I jumped around the OVP, the problem disappeared. Gee, that was easy! Replaced the OVP, and the problem promptly reappeared. Also, by poking around with a 'scope, I noticed that peak voltages at the VR input (which is the OVP output) were actually higher than the peak voltages on the bus! Pretty weird. The only way I could see that happening is from a kickback voltage from the field wire. Of course, the VR is constantly interrupting the current to the field wire, so maybe that kickback voltage is normal. That's not how I would design it to work, but I could never find any detailed specs on any VR, so who knows? We replaced the VR. No joy.

Ok, we had jumped around every connection in the field wire circuit (and I mean *every*, including the wire from the VR to the alternator itself, along with all ground connections). We had replaced the alternator, VR, and OVP (just like the owner before us). Just like the owner before us, I could turn the VR down so that the pulsing, intermittent problem would rarely, if ever, trip the OVP. But by this time, I was fanatical. We next started jumping around every portion of the alternator *output*. I bought 18 foot of #2 wire and we stepped through *every* connection with fresh, fat wire. We jumped around the noise filter. We jumped around the output diode. We installed a new battery. Jumped around every ground. Still no joy.

The breakthrough came today when I combined two clues. First, jumping around the OVP had appeared to fix the problem (even though new OVPs did not help). Second, the problem was intermittent, which meant it could be vibration-related. It dawned on me that the OVP contains a relay (I took the old OVP apart after wasting $120 on a new one) inside of it, and suddenly it hit me -- what if the OVP is vibrating so hard that the closed relay (which normally passes current straight through to the VR) is coming slightly open? That could explain why putting in a new OVP didn't help, why I was seeing kickback voltage (assuming the VR design really permits current to flow back towards the bus), and why jumping around the OVP fixed the problem. We started up the plane, waited until the problem began, and then I started applying pressure at various spots on the OVP. Sure enough, by pushing *hard* on the OVP, I could make the problem disappear and, just as important, see it reappear when I released it.

Now it gets more interesting. The OVP and VR are mounted on a flat metal plate that is riveted to a strut that's above and left of the pilot's left foot. The strut cuts across one corner of this metal plate, and I declared that we could fix the problem by just adding another rivet to the two that already connected the plate to the strut, thus reducing the vibration the OVP was seeing. However, as I felt with my finger where I would place a new rivet, I discovered that there was an empty rivet hole there!

Now, the OVP is on the far corner away from the corner where the metal plate is riveted down, and I suspect the small-but-finite weight of the OVP obtained enough leverage to bust that rivet after years of vibration (I wish I could stick my head under a few dozen other Cherokees to see if anyone else has lost that rivet). I also suspect that the OVP relay would not be so susceptible to this problem if it were redesigned to operate perpendicular to its current plane of operation. However, maybe the OVP designer didn't know it was destined to be mounted on the far end of a vibrating metal plate.

During the weeks we slaved over this, I searched the net for relevant postings and found at least one owner who had given up trying to fix his pulsing ammeter. I hope someone else with the same problem will find this note in their hour of need.

Repaired His Fiberglass Cowl

By Tom Clark

I read with interest the letter in the August 1998 magazine regarding "Cracked and Blistered Fiberglass Cowls". That's a problem that my '73 180 had when I bought it two years ago. I think I found the solution, to my version of this problem anyway. My mechanic cleaned up the blisters, filled in the cracks and did a first class fiberglass repair and paint match on the damaged area. The real fix is that he installed a fiber heat shield which he covered with a reflective heat resistant tape. He told me the heat from the exhaust stack is most of the problem and the plane probably came with a shield that has long ago departed the interior of the cowling. So far so good.

Another subject that was well covered in that issue is cracked wing walk areas. I've stepped on some that were obviously mushy but haven't noticed it in my '73. I just had the tanks pulled and spar inspected but (I watched) my mechanic didn't use mirrors and a flashlight to inspect this area. How dangerous is a cracked wingwalk and stiffeners?

Obviously I would get them fixed if I knew they were damaged but having just gone through the inspection do I need to tear into this again? What's the downside here with no obvious (external, visible) damage? Have there been accidents/incidents attributed to a cracked wingwalk or stiffener?

Some Updates for Early Plane

By Gleason Verduzco

These last several months have been busy as I've completed some major work on my Cherokee.

My old 0-320-E2A was nearing TBO and sucked

an exhaust valve, about 6,000 feet above Lancaster, California. It vibrated quite a bit but I was able to easily get to Fox Field and make a safe landing. I replaced the E2A with a D3G, 160 HP under the RAM STC from Penn Yan. Penn Yan was great to work with and I love the engine. I've put about 80 hours on it, It's smooth and strong and uses virtually no oil. The cost, including tlie engine and installation. all new fuel and oil hoses. a refurbished engine mount and oil cooler, all new or rebuilt cngine accessories, a prop overhaul and re-pitch to 60", and a new muffler was $14k (in 1997).

After flying my '74 Cherokee Cruiser all over creation for the last seven years, and now plopping down the money for a new engine, I finally bit the bullet and made several improvements that I'd been thinking about.

After the new engine. I added Isham's third window modification, a baggage door (done via a field approval/ 337), new glass all around including a storm window in the passenger side, Ashby's glareshield, a paintjob, and a new " Nnumber. I also installed new dorsal fairings from Globe Fiberglass...pretty pricey but look great.

The first order of business with the third window mod and the baggage door was lining up the parts. I priced them new through Piper distributors.... expensive and long lead time. I ended up buying them through an aircraft salvage outfit in Kansas called Dodson's International (800-255-0034). Steve Baker and Harv there are very knowledgeable.

Dodson's just cut out the section of the fuselage witli the baggagc door and windows and sent it to me. I drilled out the rivets and cleaned up the necessary parts. The whole shot was $625.

The third window really opens up the cabin and is vcry attractive. The after bulkhead is moved back about 2 feet. Of course flooring has to he installed, but since most of the bracing is already there, it's just a matter of fitting up and riveting the aluminum. It helps a bit with weight and balance too since the Cherokee 140's tends to be a little forward. I got a hat rack from Dodson for $125 (1998) out of an Archer and it fils perfectly at the new after bulkhead location. The baggage door is a huge improvement. No more dragging luggage and things over the front scats !

I got the new glass from LP Aero in Long Beach, California, including 114" windshields, 1/8" windows, a passenger side window with a storm window. all tintedgray. Total cost was about $1,000 (1998). Installation was easier than some of my past efforts with window putty and other types of sealants. We ran a bead of silicon sealant around the fuselage window cutout, pushed tlie glass up against it so that the silicon squished out, and re-installed the window retaining frame. The next day. after the silicon had dried, I scored it and peeled it away. Makes a very nice and leak free installation.

Ashby's glareshield, witli the FAA approved lighting is about $200 (1998). The lighting is just a transparent plastic tube with a string of lights inside, glued to the front edge of the glareshield. The glareshield looks great and the lighting works very well. We connected the lighting to the nav lights rheostat. The glareshield is a little shiny so we painted it flat black before installing it to reduce tlie reflection in the windshield.

All of my work was done by or under the patient guidance of Bill Dalleda, tlie owner and operator of Aircrafter's, on the field at Palomar Airport in Carlsbad. California (760-431-7608). Bill and his wife Lynn are Cherokee owners themselves, with a '68 PA-28-235. Whatever work you have in mind, Bill has probably donc it to his Cherokee and can show you the way. Bill is an advocate of owner participation and will allow you to get into the work to whatever extent you want, and will even let you use his tools ! Bill will generally make his shop available to you on evenings and weekends while work is in progress so that you can do some of his "homework assignments" after normal hours. A&P's Mike and Eric work for Bill and are also very knowledgeable and helpful. There is also a cast of retired A&P's and aircraft industry guys that wander through from time to time with lots of knowledge and experience lo share. All in all, a great place to get your Cherokee worked on, learn something about it, and have a good time.

I had my plane painted at Mathews Aviation on the field at Teliachapi, California. Chris Mathews does the stripping and A&P work witli control surfaces, etc. and Keith Brunke docs the painting. They did a beautiful job and were great to work with. They've got lots of photos of previous paintjobs to help you come up with a paint scheme. Cost for your typical Cherokee strip and poly paint is $5k. Takes about a month to complete the job . Since I live in San Diego, tlie drive up was a bit of a pain but the effort was well worth it. You can reach Matliews at (805) 822-9122.

The " Nnumber change was surprisingly easy. Send a letter to:

FAA
Aircraft Registry
PO Box 25504
Oklahoma City. OK 73125

Include a list, in preference order of three "N" numbers you'd like and a check for $10.00. In 2-3 weeks. they'll write you hack telling you which of your selections are available. If one of the available numbers suits you, you'll have 1 year to make the change. The FAA's letter is on a three-part form. After you've painted on the new N number, you send one copy of the form back to them and they'll send you a new registration. You bring another copy of the form to the FSDO and they'll type you up a new airworthiness certificate. The last copy you keep with you current registration until you get the new one.

Several years ago, Aircrafters added speed mods including Laminar Flow flap and gap seals, fancy pants, the Knots-2-U stabilator seal. and Met-co-Air tips. If you're reluctant to jump headlong into the speed mod process, I encourage all to try the stabilator gap seal and Metco tips as a first shot. The improvement in handling is very notice-

able. My Cherokee used to just sort of "mush along, a little nose high. With just these mods, handling became more crisp and sure. The stabilator seal makes the landing flare much nicer. lots easier to hold the nose wheel off. You'll also nick up speed and climb. I haven't carefully quantified either but I'd say with all the mods you'll get at least 10 mph and 200 fpm.

Piper Air Filter Service Bulletin

At press time Piper introduced a new service bulletin requiring inspcction of Facet air filters for plastic cracking.

The bulletin, Number 1022. states that ingestion of pieces of the air filter into the engine induction system may occur if the plastic disintegrates on these filters (Facet P/N 638873 or Piper P/n 460-632 used on numerous aircraft including the Cherokee 140, 150, 160, and 180, Archer II & 111, 235, Turbo Arrow. Six, Lance and Saratoga models.

Although the inspcction is only required on filters manufactured during the first quarter of 1997 through the third quarter of 1998, it may be difficult to determine when a particular filter was manufactured. Piper says to treat the filter as suspect unless it can be proven otherwise.

More on Seat Cylinders

By Bruce Niss

Ed Note: In the last issue we ran an article concerning rebuilding the Hydra Lock seat cylinders manufactured by the R. L. Porter Company. However. some models have a differcot adiustment cvlinder Here is what one member found concerning the cylinder in his Dakota.

Dear Terry,

Here's the deal: the size "Bloc-0-Lift" pneumatic strut that was OEM in my Dakota is no longer made. but another of the samc brand and within ½ inch dimensions of the original can be obtained from the Dean Lewis Company of Vancouver, WA, Telephone (360) 693-6211 (ask for "Rick"). It is manufactured by Stabilus Corp., the OEM manufacturer of my original, their P/N 732087. It has the samc lift pressure (250 Newtons/56 lbs) as the original, and, the best part, can be obtained from Dean Lewis Co. For $67.00 each. They are not re-buildable, but at that price. who cares'?

My mechanic, Troutdalc Aircraft Services of Troutdale, OR, says the rebuilds done by the present Piper supplier (P. L. Porter Co.) don't last and are definitely not a good deal . I have no idea how much $ the rebuilds are, and the Porter Co. engineers were unable to determine which of their struts that they sell to Piper would fit my Dakota, even after I supplied them with all the dimensions of my original Bloc-0-Lift.

So that's what I know. Rick is great to deal with. He put some effort into this, so I hope some CPA members can give him somc business.

Gear Problem Was Motor

By S. Salvanos

Here are the details of my recent experience with the landing gear of my 1968 Arrow, which when published, might help some other pilot.

Some weeks ago, after I took off, 1 put the gear selector in the up position and after somc seconds as usual, the landing gear seemed to be retracted. There was no more drop in the voltmeter or any indication in the ammeter. However, the yellow light continued to be on during the half hour flight.

I thought that perhaps one of the three gear up limit micro-switches failed, but soon I understood that I was wrong, as when putting the gcar selector switch in the down position just before landing, the gcar would not extend. I checked the breakers and all of them were in. Then I pressed the emergency level down to extend the gear. The three green lights came on and the yellow one off.

After a successful landing we put the aircraft on jacks and tried to retract the gcar, but it was impossible. We then checked the power and found that everything was ok up to the motor of the hydraulic pump. So we understood that the problem should be in that motor and. after demounting it, we found that one of the wires of the two brushes of the rotary was broken.

So it is now quite clear that the hydraulic pump failed just before the landing gcar reached the up limit switches. This is why the yellow light remained on, the breakers in, and there was no more indication of power consumption

Pulsing Ammeter Cause Found

By Jeffrey Pitts

I have read with interest several articles in the past few issues of POM about the bouncing ammeter needle in Piper Warriors. My story follows:

I purchased new from the factory a 1976 Piper Warrior II and proceeded to accumulate 10.000 hours on the airframe from 1976 through 1996. The airplane was used in my flight school and scrupulously maintained, receiving an "annual" inspection every 100 hours since it was in commercial use.

From 1990 (about 6000 hours) onward. the ammeter bounced from 0 to 25 amps randomly, but usually on almost every flight. We replaced the OVR, Alternator, VR, fuses, master switch, etc numerous times without improvement. Finally, at 10,000 hours, after a total electrical failure, the mechanic found an internally shorted and broken main alternator cable which was the original Piper installation.

The cable from the alternator to the bus had an internal crack (not at the terminal end) which eventually failed. Cutting away the insulation revealed the culprit. Re-

placing this alternator cable eliminated the bouncing ammeter needle

Aren't airplanes wonderful?

Overhead Vents; Temper Foam

Dear Terry.

We have a 1976 Archer on which we want to redo the interior The overhead vent registers arc different from the newer ones in that they arc almost square instead of long and narrow These vents measure about 2 1/8 bv 2 3/16, inches.

I. Are there replacement vents of this type available'?

2. Is there an upgrade version (of the ball type that twists to open and close) available that would fit?

Also. we would like to refurbish the seat cushions with Temper Foam but can not find a source.

Sincerely yours.
Blane Vickery
Dalton. Ga.

Dear Blane,

I am sorry to report that there are no replacements for those square type vents and there is also no practical way to upgrade or convert them.

Finally, Temper Foam can be purchased in sheets from Kees Goebel Medical, 9663 Glades Drive, Hamilton, OH 45011 (800-354-0445). It is available in several degrees of firmness.

Sincerely yours,
TERRY LEE ROGERS

Cure *For Sticky Starter*

By Dick Kruse

I experienced the problem of a starter that spins, but doesn't engage several times. My FBO gleefully suggested a new or rebuilt starter, but alter asking questions of scvcral A&P's, I have solved the problem after nine months and 240 hours.

Here is my solution:

1) Use a small diameter but long screwdriver into the port side of the cowl opening. Push the starter gear on the top, rotating it counter clockwise. This sill move the gear forward. From here, the starter will always engage (a short piece of coat hangar wire with a loop in one end and a ½ inch long 45 degree bend in the other is part of my plane's on-board tools.)

2) Engage the starter, but do not start the engine. This will pull the starter gcar into the ring gear.

3) Using an aerosol brake cleaner with the tube extension, drench the shaft behind the starter gear.

4) Using an aerosol "pure silicone" spray, drench the shaft again after the brake cleaner has evaporated.

Doing this every other month has eliminated my starter problems.

Index to Articles

A

INDEX

INDEX

C

INDEX

D

E

INDEX

INDEX

H

INDEX

M

n

o

INDEX

Q

R

S

INDEX

7

U V

W

INDEX